TEN01214-06

Operation & Maintenance Manual

HYDRAULIC EXCAVATOR

Basic Operation

PC220LC-12

PC220LCi-12

SERIAL NUMBERS

800001
and up

WARNING

Unsafe use of this machine may cause serious injury or death. Operators and maintenance personnel must read this manual before operating or maintaining this machine. This manual should be kept near the machine for reference and periodically reviewed by all personnel who will come into contact with it.

NOTICE

Komatsu has Operation & Maintenance Manuals written in some other languages. If a foreign language manual is necessary, contact your local distributor for availability.

KOMATSU

Foreword

WARNING

Komatsu recommends that any service parts used for maintenance, repair or replacement of emission control systems be genuine new Komatsu or Komatsu approved parts or Komatsu approved rebuilt parts or assemblies or others parts of equivalent quality, and that the engine be serviced by an authorized Komatsu distributor. Failure to follow these recommendations could result in ineffective service, damage to the product, or safety risks (including serious personal injury or death).

In the United States, the owner may choose to have maintenance, replacement or repair of the emissions-related parts performed by a facility other than an authorized Komatsu distributor.

WARNING: Breathing diesel engine exhaust exposes you to chemicals known to the State of California to cause cancer and birth defects or other reproductive harm.

- Always start and operate the engines in a well-ventilated area.
- If in an enclosed area, vent the exhaust to the outside.
- Do not modify or tamper with the exhaust system.
- Do not idle the engine except as necessary.

For more information go to www. P65warnings.ca.gov/diesel

WARNING: This product can expose you to chemicals including lead, which is known in the State of California to cause cancer and birth defects or other reproductive harm.

For more information go to www. P65warnings.ca.gov.

Table of Contents

Foreword 1-1
Foreword 1-7
Safety Information 1-8
Introduction 1-9
Main Application of Machine 1-9
Directions of Machine 1-9
Visibility from Operator Seat 1-9
Engine Technology to Conform Exhaust Gas Emission 1-10
Machine Information 1-11
Location of Product Identification Number (PIN) and Machine Serial No. Plate 1-11
Location of Engine Number Plate 1-11
Service Meter Location 1-12
Your Machine Serial Numbers and Distributor 1-12
Abbreviation List 1-13
Safety 2-1
Safety Labels 2-2
Location of Safety Labels 2-3
Contents of Safety Labels 2-5
General Precautions Common to Operation and Maintenance 2-16
Precautions Before Starting Operation 2-16
Preparations for Safe Operation 2-16
Procedures If Fire Occurs 2-18
Precautions to Prevent Fire 2-18
Precautions When Getting on or off Machine 2-20
Do Not Get Caught in Work Equipment 2-21
Precautions Related to Protective Structures 2-22
Protection Against Objects Which Fall, Fly, or Intrude 2-22
Unauthorized Modification 2-23
Precautions Related to Attachments and Options 2-24
Quick Coupler Attachment 2-24
Large Attachments and Combinations 2-25
Precautions for CAB Glass 2-25
Precautions When You Operate Engine Inside Building 2-25
Precautions for Operation 2-26
Precautions for Jobsite 2-26
Start Engine 2-30
Precautions for Operation 2-32
Precautions for Transportation 2-41
Towing and being Towed 2-42
Lifting Operation by Using Bucket with Hook 2-43
Precautions for Maintenance 2-44
Precautions Before Starting Inspection and Maintenance 2-44
Precautions for Check and Maintenance 2-51
Precautions for DEF 2-58
General Character and Precautions for Handling 2-58
Precautions When You Add 2-58
Precautions for Storage 2-58
Precautions for Fire Hazard and Leakage 2-58
Other Precautions 2-58
Operation 3-1
General View 3-2
Machine Equipment Name 3-2
Cab Equipment Name 3-4
Controls and Gauges Names 3-5
Explanation of Components 3-8
Machine Monitor Equipment 3-8

ICT Monitor 3-121
Switch 3-129
Control Levers and Pedals 3-143
Other Equipment 3-148
Machine Operations and Controls 3-201
Checks and Adjustment Before You Start Engine 3-201
How to Start Engine 3-233
Operations and Checks After You Start Engine 3-237
How to Stop Engine 3-251
How to Start Machine (Travel FORWARD and REVERSE) and Stop Machine 3-255
Steer Machine 3-259
Track Control 3-261
How to Change Travel Speed 3-267
How to Steer Machine 3-268
How to Operate Work Equipment 3-269
Handle Working Mode 3-271
Auto-Deceleration Function 3-272
Auto Idle Stop Function 3-273
Prohibited Operations 3-274
Precautions for Operation 3-278
Precautions When You Work on Slope 3-280
Escape from Soft Ground 3-282
Recommended Applications 3-283
Effective Use of Hydraulic Excavator 3-284
How to Replace and Invert Bucket 3-285
How to Park Machine 3-288
How to Examine After You Finish Work 3-290
Lock 3-291
Handle Operator ID 3-298
Each Operator Setting 3-298
Attachment Setting 3-300
Attachment to Be Set 3-301
How to Change Attachment 3-302
How to Edit Attachment Setting 3-303
Attachment Advanced Setting 3-305
Change in Weight Adjustment 3-305
Change Shape Adjustment 3-306
Handle Air Conditioner 3-325
Explanation of Air Conditioner Components 3-326
How to Operate Air Conditioner 3-331
Handle Radio Sound System 3-334
How to Listen AM/FM Radio 3-335
How to Play Music with Bluetooth® Connected 3-336
How to Use Telephone 3-337
Audio Setting 3-339
Volume Control 3-340
Bluetooth® Connection Setting 3-341
Pairing 3-342
How to Examine Version of Radio 3-343
Stow Antenna 3-344
Handle KomVision 3-345
Precautions When You Use KomVision 3-345
Machine Monitor Display 3-346
Use Each Function 3-348
Object Avoidance 3-350
Targets of Object Avoidance 3-352
Precautions When You Use Object Avoidance 3-352
How to Handle Object Avoidance 3-361

Remote Courtesy Lights Function 3-368
How to Use Remote Courtesy Lights Function When You Get on Machine 3-368
How to Use Remote Courtesy Lights Function When You Get off Machine 3-369
2D Boundary Control 3-370
Prohibited Operations When You Use 2D Boundary Control 3-371
Precautions When You Use 2D Boundary Control 3-372
2D Boundary Control 3-374
Monitor Display of 2D Boundary Control 3-375
2D Boundary Control During Travel 3-377
How to Temporarily Disable 2D Boundary Control 3-377
How to Set 2D Boundary Control 3-378
How to Disable 2D Boundary Control 3-388
Cab Interference Prevention 3-389
Function of Cab Interference Prevention 3-390
Operation of Cab Interference Prevention 3-391
Monitor Display of Cab Interference Prevention 3-392
How to Temporarily Disable Control of Cab Interference Prevention 3-392
How to Set Cab Interference Prevention 3-393
Swing to Angle 3-394
Monitor Display of “Swing to Angle” 3-395
Prohibited Operations When You Use “Swing to Angle” 3-396
Precautions When You Use “Swing to Angle” 3-397
“Swing to Angle” for Travel 3-399
How to Temporarily Disable Control of “Swing to Angle” 3-399
How to Set “Swing to Angle” 3-400
2D Machine Control 3-401
How to Use 2D Machine Control 3-401
Semi-Auto Mode 3-413
Payload Meter Function 3-434
How to Use Payload Meter Function 3-434
How to Clear Payload Record 3-459
Truck Information 3-475
Material Information 3-483
Other Setting 3-490
Operation Record of Payload Meter Work 3-507
Cooperation with Smart Construction Fleet (ICT Monitor) 3-513
Procedure for Payload Meter Function Error 3-522
Control Patterns Other Than Standard Control Pattern 3-525
Transportation 3-526
Precautions When You Transport Machine 3-526
Select Transportation Method 3-526
Load onto and Unload from a Trailer 3-527
How to Lift Machine 3-539
Cold Weather Operation 3-541
Cold Weather Operation Information 3-541
Precautions After Daily Work Ends in Cold Weather 3-543
After Cold Weather Season 3-543
Precautions for Long-Term Storage 3-544
Prepare for Long-Term Storage 3-544
Maintenance During Long-Term Storage 3-544
How to Start Machine After Long-Term Storage 3-545
Troubles and Procedures 3-546
Procedures When Machine Runs out of Fuel 3-546
Precautions When You Tow Machine 3-547
Precautions for Severe Work Condition 3-548
Procedures When Battery is Discharged 3-549
Other Trouble 3-554
Maintenance 4-1

Precautions for Maintenance 4-2
Outline of Maintenance 4-5
Handle Oil, Fuel, Coolant, and Do Oil Clinic 4-5
Battery Terminal 4-13
Electrical Components 4-14
Standard Torque 4-15
Maintenance Schedule 4-17
Maintenance Schedule Table 4-17
Maintenance Interval for Hydraulic Breaker 4-19
Maintenance Procedure 4-20
Every 10 Hours Before Initial 50 Hours Maintenance or Daily Maintenance 4-20
When Required 4-20
Examine Before You Start Operation 4-51
Every 100 Hours Maintenance or Weekly Maintenance 4-52
Every 250 Hours Maintenance or Monthly Maintenance 4-53
Every 500 Hours Maintenance 4-56
Every 1000 Hours Maintenance 4-73
Every 2000 Hours Maintenance 4-82
Every 3000 Hours Maintenance 4-89
Every 4000 Hours Maintenance 4-92
Every 4500 Hours Maintenance 4-97
Every 6000 Hours Maintenance 4-100
Every 8000 Hours Maintenance 4-102
Every 9000 Hours Maintenance 4-102
Every 6 Months Maintenance 4-103
Specifications 5-1
Specifications 5-2
Specifications: PC220LC-12 5-2
Specifications: PC220LCI-12 5-4
Attachments and Options 6-1
Precautions When You Use Attachments and Options Safely 6-2
Handle Quick Coupler 6-5
Quick Coupler Equipment Name 6-5
Quick Coupler Setting 6-6
To Release a Bucket or Attachment 6-10
To Pick Up a New Bucket or Attachment 6-11
Attachment Lock System 6-12
Handle Laser Catcher 6-15
Component Names of 2D Laser Catcher 6-15
2D Laser Setting 6-16
Handle Bucket with Hook 6-17
Work Precautions 6-17
Handle Machine Ready for Installation of Attachment 6-18
Explanation of Components on Machines with Attachment 6-18
How to Change-over and Connect Hydraulic Circuit for Machine Ready for Installation of Attachment 6-22
How to Remove and Install Attachment 6-25
Operate Attachment 6-32
Long-Term Storage 6-35
Maintenance of Additional Filter for Breaker 6-36
Specifications 6-40
Attachments and Options 6-41
Select Attachment 6-41
Track Shoes Selection 6-43
Handle Rubber Pad Shoes and Road Liners 6-44
Bucket Teeth Selection 6-46
Handle Trapezoidal Bucket 6-47
Handle Extension Arm 6-48

Recommended Attachment Operations 6-49
Hydraulic Breaker 6-49
Replacement Parts 7-1
Defined Life Parts 7-2
Defined Life Parts List 7-2
Consumable Parts 7-3
Consumable Parts List 7-3
Other Parts 7-4
Recommended Fuel, Coolant, and Lubricant 7-6
Lubrication Chart 7-9
How to Use Fuel, Coolant and Lubricants by Ambient Temperature 7-10
Recommended Brands and Qualities Other Than Komatsu Genuine Oils 7-11
Index 8-1

Foreword

This manual explains the operation, and the inspection and maintenance procedures necessary for the safe use of the machine. Most accidents occur by the failure to obey basic safety rules for the operation and maintenance of machines. Obey the precautions in the Operation and Maintenance Manual at all times.

Make sure that you know the work conditions in advance to prevent accidents caused by dangerous conditions.

Komatsu cannot predict each circumstance that involves a possible danger when the machine is used. The precautions and warning indications in the Operation and Maintenance Manual and on the machine cannot include all possible safety precautions.

Do the operation, inspection, and maintenance of the machine on the user's responsibility if a situation is not included in the Operation and Maintenance Manual. Do the necessary precautions for safety. Make sure you avoid operations and procedures that are not allowed in the Operation and Maintenance Manual.

Read and understand all precautions and warnings in Operation and Maintenance Manual and on the machine before the operation, inspection, and maintenance. Obey all the contents. If you do not obey the content, it can cause personal injury or death.

If you do not operate the machine correctly, or do not do the inspection and maintenance correctly, it is dangerous, and can cause personal injury or death.

Keep Operation and Maintenance Manual in the position shown in the figure for all personnel to read.

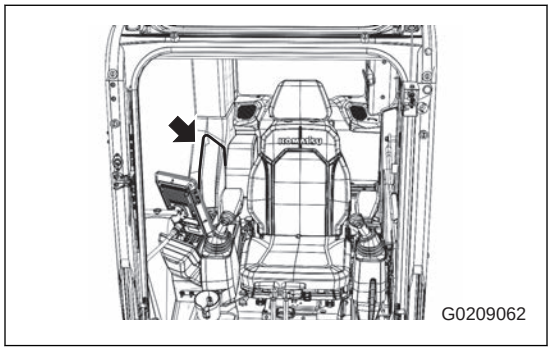

If you transfers the machine, be sure to supply Operation and Maintenance Manual together with the machine.

Komatsu supplies machines that are applicable to all rules and standards of the country to which it is shipped. If the machine is used in a country other than that of the shipping destination, there is possibility that it does not agree with the safety device requirements and standards of that country. When you are not sure if your machine is applicable to the standard and regulations in the country or region to be used, consult your Komatsu distributor.

Explanations, values and illustrations in the Operation and Maintenance Manual are given based on the latest information available on the date of publication. For up-to-date information about your machine or information shown in the Operation and Maintenance Manual, consult your Komatsu distributor.

International System of Units (SI) is used for units of measurement.

For reference, gravitational units are given in { }.

The numbers in illustrations refer to the numbers in ( ) in the text. For example, 1 is shown as (1).

When you consult your Komatsu distributor for questions or repair, tell them about the information in "Machine Information (1-11)".

If Operation and Maintenance Manual is lost or damaged, immediately consult your Komatsu distributor to prepare a replacement of Operation and Maintenance Manual.

Some of Komatsu machines have the software based on the Open Source Software (OSS).

By the license of the OSS, Komatsu releases the license information of the software to be used in the website that follows.

https://www.komatsu.jp/en/ProductInfo/opensoft/

Some Komatsu machines have radio equipment certified by the type approval in each country.

Related information is available on the website below.

https://www.komatsu.jp/en/ProductInfo/radio-compliance

Safety Information

Make sure to obey the precaution and warning indications in the Operation and Maintenance Manual and on the machine to avoid personal injury in operation, inspection, or maintenance, and for the safety of the personnel around the machine.

In Operation and Maintenance Manual or on the machine, the safety warning symbols are used to identify important messages.

Safety warning symbols show the risk of accidents that can cause personal injury or death. Obey the instructions of the safety warning symbol.

To make the important safety messages clear, the safety warning symbols and signal words that follow are used in Operation and Maintenance Manual or on the machine.

⚠ DANGER	This signal word shows a very dangerous situation which, if not avoided, will cause personal injury or death.
⚠ WARNING	This signal word shows a possibly dangerous situation which, if not avoided, can cause personal injury or death.
⚠ CAUTION	This signal word shows a possibly dangerous situation which, if not avoided, can cause injury, or damage to the machine or the adjacent area.

The signal words below show the precautions that you must obey to protect the machine, or useful information.

NOTICE	If you do not obey this precaution, it can cause damage to the machine, or the service life can decrease.
REMARK	It shows useful information.

Introduction

Main Application of Machine

Use this machine mainly for the operations that follow.

- Digging Work
- Ditching work
- Loading work
- Leveling work
- Demolition work

For details of the work procedure, see Operation, “Recommended Applications (3-283)”.

Directions of Machine

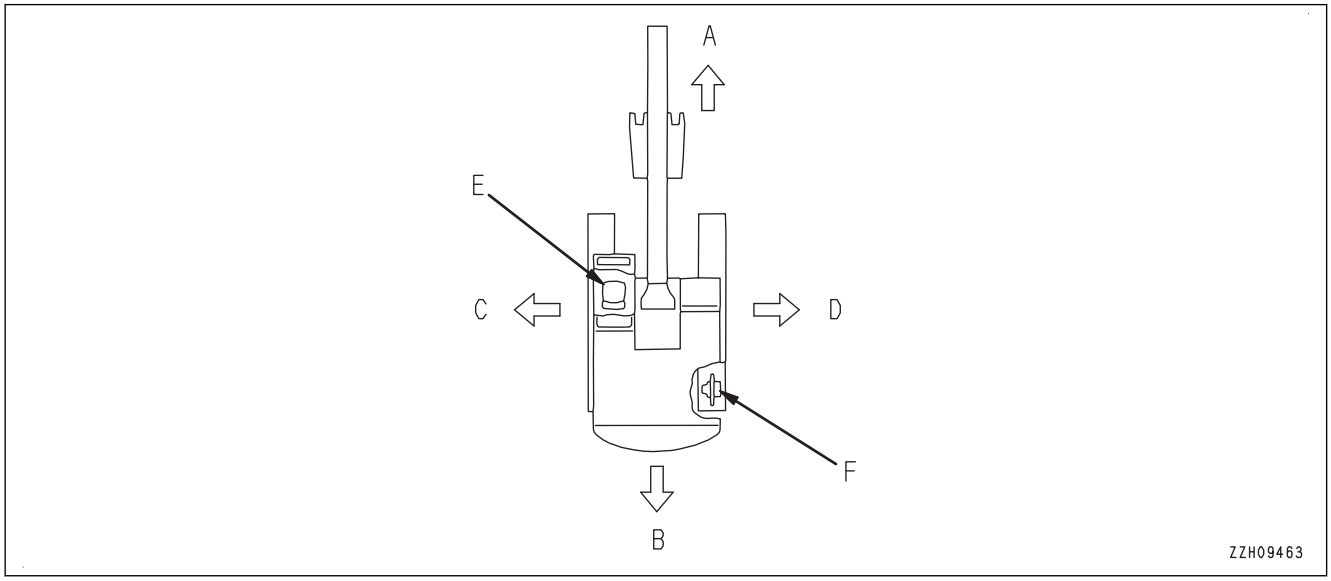

(A) Front
(B) Rear
(C) Left
(D) Right
(E) Operator seat
(F) Sprocket

In the Operation and Maintenance Manual, the directions of the machine (front, rear, right, left) are based on the direction when operator in the operator's seat sees the direction of forward travel while the sprocket is at the rear.

Visibility from Operator Seat

This machine complies with the visibility standard (ISO 5006).

This machine maintains a proximity visibility of a height of 1.5 m {4 ft 11 in} at a point 1 m {3 ft 3 in} away from the outside surface of the machine, and a visibility for a radius of 12 m {39 ft 4 in}.

Protective Structures

This machine is equipped with a structure to protect the operator (ROPS) conforming to ISO12117-2.

Operator Seat

The operator seat that is applicable to ISO11112 is installed to this machine.

Seat Belt

The seat belt that is applicable to ISO6683 is installed to this machine.

Engine Technology to Conform Exhaust Gas Emission

About Engine Technology

This engine technology combines a Komatsu Diesel Particulate Filter (KDPF) and Komatsu's Urea Selective Catalytic Reduction (SCR) to conform EPA Tier4 Final emission regulation in North America.

- Komatsu Diesel Particulate Filter (KDPF): A device which catches diesel particular matter or soot in the exhaust gas to clean exhaust gas. If soot is accumulated to a level in the filter, a purification step (called as “regeneration”) to burn the soot is done automatically to keep the filtering performance of KDPF high.
- Komatsu' Urea SCR system: A device which decomposes the poisonous nitrogen oxides (NOx) mixed in the exhaust gas into harmless nitrogen and water. When the reagent (Diesel Exhaust Fluid) is sprayed into the exhaust gas, a reaction occurs between the nitrogen oxides and ammonia discharged from the urea solution and the nitrogen oxides are decomposed into nitrogen and water.

REMARK

The colored exhaust gas can come out at low temperature immediately after the engine is started in cold weather because of the properties of the catalyst and filter to be used to clean the exhaust gas. This is not a problem if it occurs for a short time.

About Diesel Exhaust Fluid (DEF)

Diesel Exhaust Fluid is the aqueous urea solution for the SCR system.

DEF is the abbreviation for Diesel Exhaust Fluid, and is represented as DEF throughout this manual.

DEF is a colorless transparent and aqueous urea solution made with 32.5 % urea (AUS32) and 67.5 % deionized water. Urea as main constituent is a material which is used for cosmetics, medical and pharmaceutical products, and fertilizer, etc.

Commercial DEF, that is API (American Petroleum Institute) certified and satisfies the quality requirements in accordance with ISO22241-1, is to be used. The certified DEF has the API DIESEL EXHAUST FLUID Certification Mark shown as follows. Look for the API DEF Certification Mark when you purchase DEF.

API Diesel Exhaust Fluid Certification Mark is the trademark of API (American Petroleum Institute).

Machine Information

When you consult your Komatsu distributor for repair or replacement of parts, tell them the items that follow.

Location of Product Identification Number (PIN) and Machine Serial No. Plate

The nameplate is installed at the position on the figure.

Product Identification Number, SERIAL No.

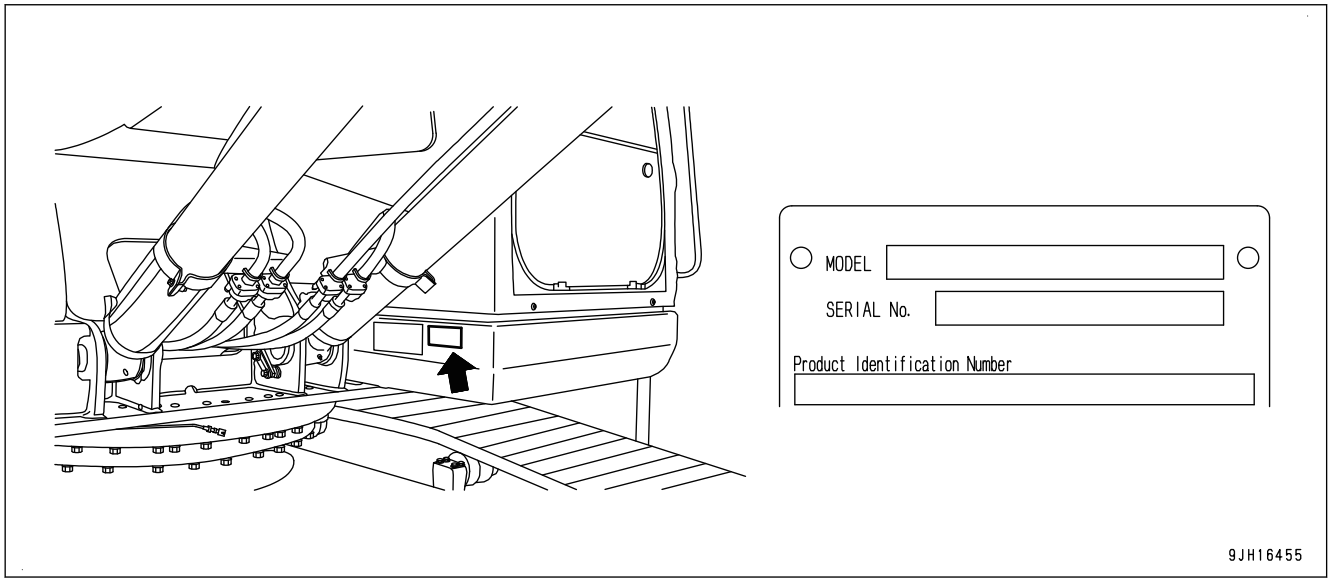

Location of Engine Number Plate

They are attached at the top of the cylinder head cover.

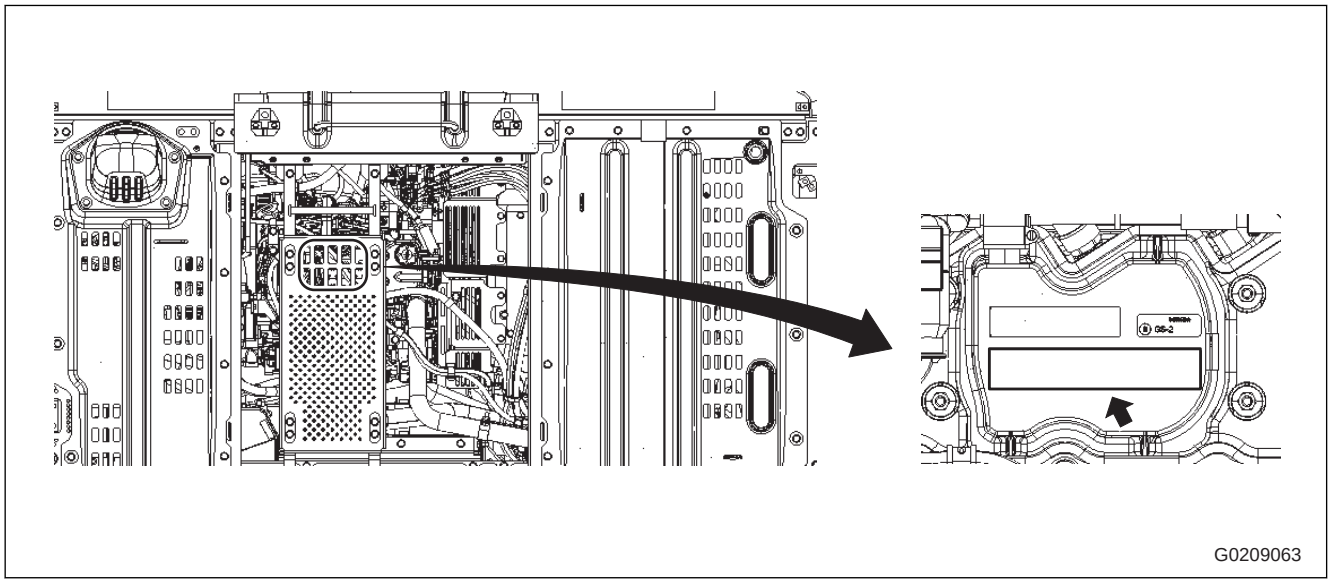

Service Meter Location

The service meter is shown on the machine monitor.

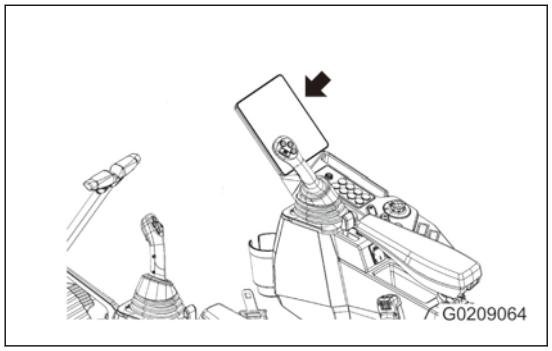

Your Machine Serial Numbers and Distributor

Machine serial No.	
Engine serial No.	
Product identification number (PIN)	
Distributor name	
Address	
Phone/Fax	
Service personnel	

Abbreviation List

- This is a list of the abbreviations for functions, devices and parts which are used in the Operation and Maintenance Manual.
- Commonly used abbreviations are not in the list.
- Some abbreviations that are special and of low frequency are given in the Remarks.

Abbreviations used in the text

Abbreviation	Official name	Meaning
API	American Petroleum Institute	API is an abbreviation for American Petroleum Institute.
B.O.C	Bolt-On Cutting edge	B.O.C is the cutting edge to be installed to the bucket with the bolts.
CAN	Controller Area Network	CAN is a type of network that communicates between the machine monitor and controller.
DEF	Diesel Exhaust Fluid	DEF is the aqueous urea solution used for the SCR system.
EGR	Exhaust Gas Recirculation	EGR is a function that recirculates a part of the exhaust gas to the air intake side to suppress NOx.
FOPS	Falling Object Protective Structure	FOPS is a structure to protect the operator from falling objects.
GNSS	Global Navigation Satellite System	GNSS is a general term for satellite positioning system.
GPS	Global Positioning System	GPS is a type of satellite positioning system.
IMU	Inertial Measurement Unit	IMU is a device to sense the angle (or angular velocity) and acceleration of the 3 axes.
KCSF	KOMATSU Catalyzed Soot Filter	KCSF is a filter that catches soot in exhaust gas.
KDOC	KOMATSU Diesel Oxidation Catalyst	KDOC is a device to clean exhaust gas.
KDPF	KOMATSU Diesel Particulate Filter	KDPF is a device that consists of KCSF and KDOC, and it catches the soot (particulate matter, PM) in the exhaust gas.
KOWA	Komatsu Oil and Wear Analysis	KOWA is a preventive maintenance service that collects and analyzes the oil in the machine at specified intervals to find wear and abnormal parts of the machine at an early stage.
OPG	Operator Protective Guards	OPG is a structure to protect the operator from flying or falling objects.
PPC	Pressure Proportional Control	PPC is a function to control the pressure in the hydraulic circuit in proportion to the lever operation.
PTO	Power Take Off	PTO is a mechanism to extract the engine power.
ROPS	Roll-Over Protective Structure	ROPS is a structure that protects operators in the event of a machine roll-over.
SCR	Selective Catalytic Reduction	SCR is a device to clean the nitrogen oxide (NOx) in the engine exhaust gas.
SOC	State Of Charge	SOC is the abbreviation for the charge level rate to the battery capacity as shown on the liquid crystal panel of the battery charger.
TOPS	Tip-Over Protective Structure	TOPS is a structure to protect the operator from tip-over of machine.

Safety

⚠ WARNING

Please read and make sure that you fully understand the precautions described in this manual and the safety labels on the machine. When operating or servicing the machine, always follow these precautions strictly.

Safety Labels

Fully understand the content and how to avoid the danger shown on the safety labels. Remember where these safety labels are attached.

Handle the safety labels attached on this machine as follows.

- Keep the safety labels clean at all times to be read correctly. When you clean the safety labels, do not use the organic solvents or gasoline. These can cause the labels to peel off.
- If the safety label has damage, or it cannot be found or read, replace it with a new one. For the part numbers of the safety labels, see Operation and Maintenance Manual or actual label, and purchase it from your Komatsu distributor.
- The safety labels are not the only signs on the machine. Handle the other signs same as the safety labels.

Location of Safety Labels

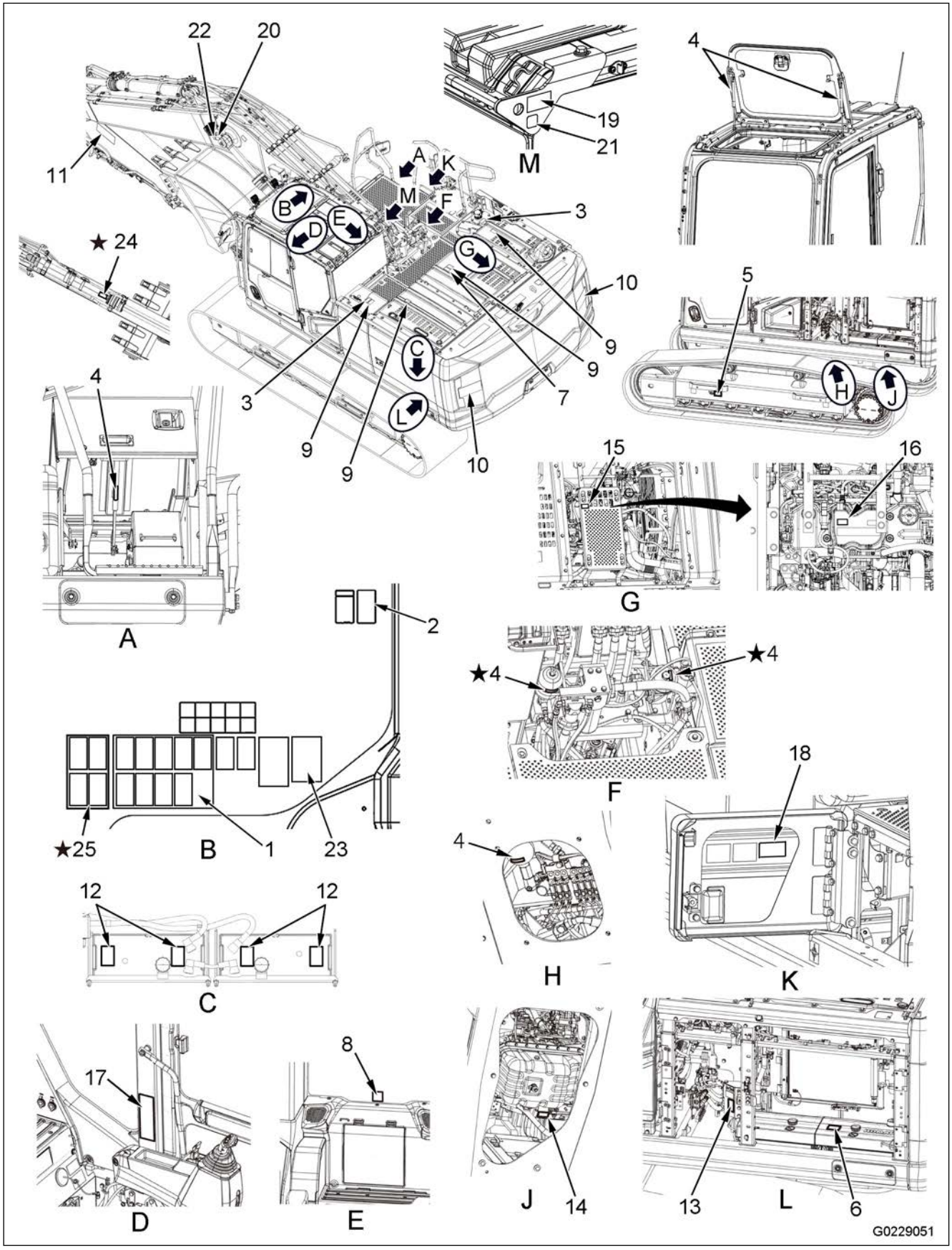

The ★ marks in the figure are available or not based on the option.

1. Combined safety information label
(a) Caution before operation, inspection and maintenance
(b) Caution when leaving operator's seat
(c) Caution for electric cables
(d) Caution when swinging and traveling in reverse
(e) Caution for blast site
(f) Caution when traveling in reverse
(g) Caution when opening or closing front window
(h) Caution for control pattern
(i) Caution for using seatbelt
2. Caution when stowing front window
3. Caution for high-temperature coolant and hydraulic oil
4. Caution for handling accumulator and gas spring
5. Caution for adjusting track tension
6. Caution for handling cable
7. Caution for rotating parts when you check and maintenance
8. Emergency escape
9. Caution against falling
10. Prohibition of entering into swing range
11. Caution for nearing machine
12. Caution for handling battery
13. Prohibition of start by short-circuiting
14. Prohibition of start by short-circuiting
15. Caution against high temperature
16. Caution for high-pressure fuel
17. Caution for handling ROPS
18. Caution for handling DEF
19. Anchor point for tie-off
20. Anchor point for tie-off
21. Prohibition of lifting all the machine (anchor point for tie-off)
22. Prohibition of lifting all the machine (anchor point for tie-off)
23. Precautions for object avoidance
24. Prohibition of rod rotation without cylinder stroke, and prohibition of wiring harness pulling (if equipped)
25. Precautions to handle ICT monitor, and precautions for cylinder function when you start engine (if equipped)

Contents of Safety Labels

1. Combined safety information label
   Part number: 2A5-00-56240

   - Warnings for operation, inspection and maintenance.
   - Improper operation and maintenance can cause serious injury or death.
   - Read the manual and labels before operation and maintenance.

   Follow instructions and warnings in manual and in labels on machine.
   Detailed explanations of the content of each label are as follows:

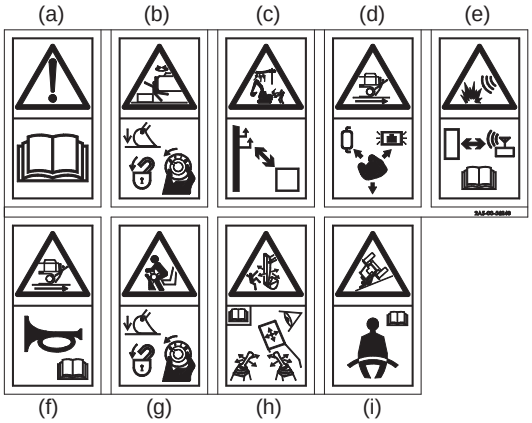

(a) Caution before operation, inspection and maintenance

- Warning!
- Read manual before operation, maintenance, disassembly, assembly and transportation.

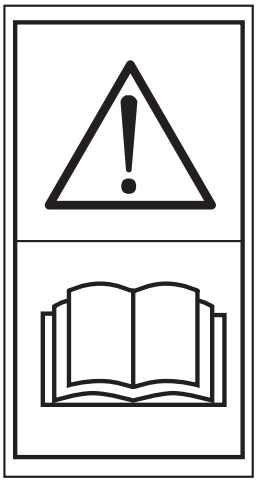

(b) Caution when leaving operator's seat

- Sign indicates a hazard of being caused or run over by unexpected moving of stopped machine.
- Before you go away from machine, lower the work equipment to the ground, lock the control levers, and stop the engine.

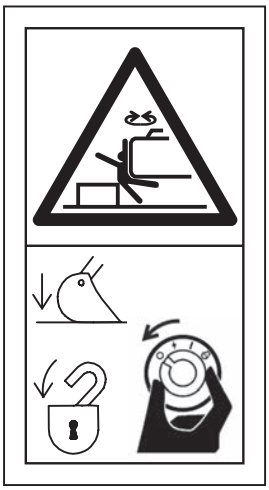

(c) Caution for electric cables

- Sign indicates an electrocution hazard if machine is brought too near electric power lines.
- Keep a safe distance from electric power lines.

(d) Caution when swinging and traveling in reverse

- When swinging or backing up excavator, press button to change display mode on monitor so you can see rear and side of machine.
  Before moving, look around and at mirror and monitor to confirm that no one is around the machine. Failure to do so can result in serious injury or death.

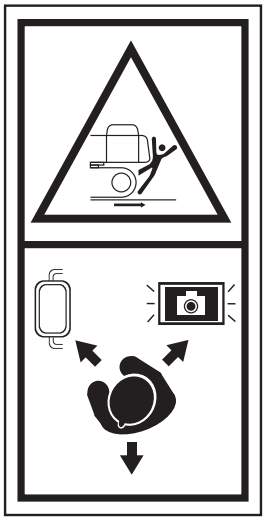

(e) Caution for blast site

- At the blasting jobsite, there is a danger of unexpected explosion because of use of the wireless equipment.
- Keep the machine away from the blasting jobsite and detonator to keep a safe distance.

(f) Caution when traveling in reverse

- Take care when reversing.

To prevent SEVERE INJURY or DEATH, do the following before moving machine or its attachments:

- Sound horn to alert people nearby.
  Be sure no one is on or near machine or in swing area.
  Rotate cab for full view of travel path if it can be done safely.
  Use spotter if view is obstructed.
  Follow the above even if machine is equipped with travel alarm, mirrors and rear view camera.

WARNING

To open or close the front or ceiling window, never stand up from the operator's seat before throwing the safety lock lever to the lock position.
Inadvertently touching any of the working equipment control levers might cause the machine to start moving all of a sudden, probably resulting in a serious injury.

(g) Caution when opening or closing front window

Accidental contact with control levers may cause unintended machine movement resulting in injury or death. Always lower the attachments to ground, set the lock lever to LOCK position and stop engine before:

- Opening or closing front window, ceiling window or door.
- Attaching or detaching lower window.
- Adjusting seat position.
- Standing up from seat.

(h) Caution for control pattern

To prevent personal injury or death caused by incorrect operation, obey the items that follow when you operate the machine.

- Make sure that the control pattern shown on the monitor agrees with the machine movement.
- When you examine the movement of the machine, be careful of the safety around the machine, and operate it slowly.

When you change the control pattern of the machine, obey the items that follow.

- Before you change the control pattern, lower the work equipment to the ground, stop the engine, and make sure that the lock lever is in the LOCK position.

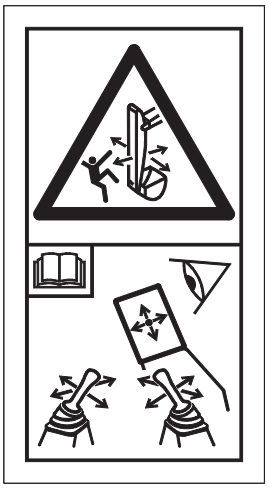

(i) Caution for using seatbelt

- Always use seat belt when operating the machine to reduce risk of injury or death in case of a roll-over.
- Always check for damage or wear of the seat belt, damage of the connecting brackets, and tightness of bolts.
- Adjust seat position to allow full brake pedal travel with operator's back against seat back.
- After adjusting seat position, get off the seat and tighten the tether belts located between the floor and seat if equipped.
- Read Operation and Maintenance Manual.

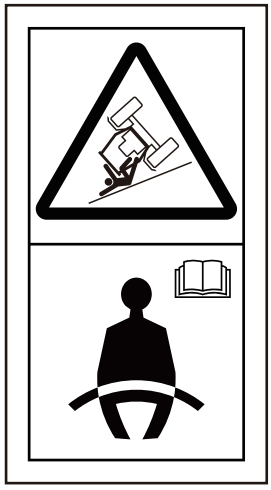

2. Caution when stowing front window

   Part number: 09803-A0481

   - Sign indicates a hazard from falling window.
   - After raising window, be sure to lock it in place with lock pin.

3. Caution for high-temperature coolant and hydraulic oil

   Part number: 09653-B0481

   - If you open the cap while the temperature of coolant or oil is high, it can spurt out, and it can cause burn injury.
   - Do not open the cap while the temperature is high.

4. Caution for handling accumulator and gas spring

   Part number: 09659-B057B

   - There is the hazard of explosion causing injury.
   - Do not disassemble accumulator and gas spring, make holes in it, weld it, cut it, hit it, roll it or bring it near flame.

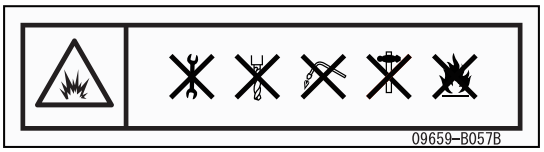

5. Caution for adjusting track tension

   Part number: 2A5-00-56330

   - Sign indicates a hazard of flying plug from track adjuster that could cause injury.
   - Read manual when adjusting track for safe and proper handling.

6. Caution for handling cable

   Part number: 09808-A0881

   - Sign indicates an electric shock hazard from handling the cable.
   - Read manual for safe and proper handling.

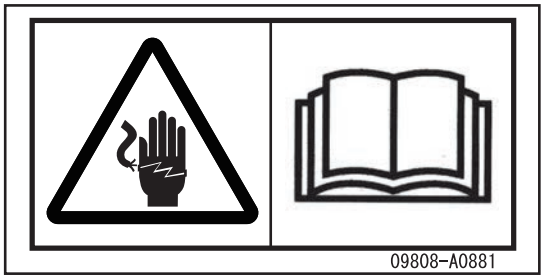

7. Caution for rotating parts when you check and maintenance

   Part number: 2A5-00-56150

   - Sign indicates a hazard of rotating parts, such as belt.
   - Turn off before inspection and maintenance.

8. Emergency escape

   Part number: 09844-10050
   This is an emergency exit when the cab door will not open. In an emergency, break the window with the installed hammer and go out through there.

9. Caution against falling

   Part number: 09805-D0481

   - Sign indicates a hazard of falling.
   - Do not stand on this place here.

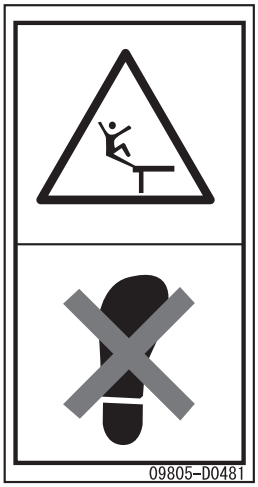

10. Prohibition of entering into swing range

    Part number: 2A5-00-56161

    - Sign indicates a crush hazard by rotation of upper structure of the machine.
    - Keep away from swinging area of the machine.

11. Caution for nearing machine

    Part number: 2A5-00-56340

    - Sign indicates a hazard of being hit by the working device of the machine.
    - Keep away from machine during operation.

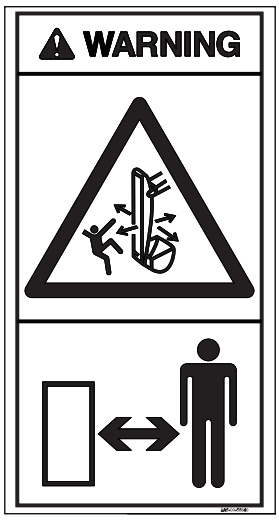

12. Caution for handling battery

    Part number: 09664-30014

13. Prohibition of start by short-circuiting

Part number: 09842-B0482

- Start the engine only while sitting on the operator's seat.
- Do not attempt to start the engine by short-circuiting the engine starting circuit. Such an act may cause a serious personal injury or fire.

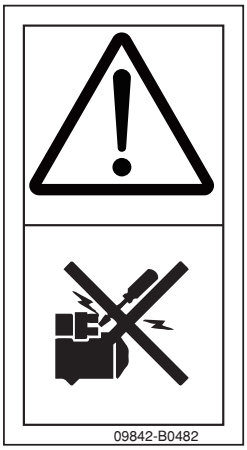

14. Prohibition of start by short-circuiting

Part number: 09842-B0642

- Start the engine only while sitting on the operator's seat.
- Do not attempt to start the engine by short-circuiting the engine starting circuit. Such an act may cause a serious personal injury or fire.

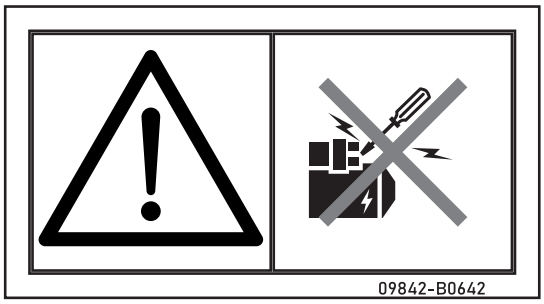

15. Caution against high temperature

Part number: 2A5-00-51680

- Sign indicates a burn hazard from touching heated parts, exhaust pipe and body during or right after operation.
- Never touch when hot.

16. Caution for high-pressure fuel

Part number: 6757-71-1810

- Do not open high pressure fuel system with engine running. Engine operation causes high fuel pressure.
- High pressure fuel spray can cause serious injury or death.

17. Caution for handling ROPS

Part number: 09620-T2001, 09620-A3002

- If some modification is applied to the ROPS or FOPS, it may affect the strength and may not be comply with the standard. Consult Komatsu Distributor before altering.
- ROPS or FOPS may provide less protection if it has been structurally damaged or involved roll-over. Consult Komatsu Distributor in that case.
- Always wear seat belt when moving.

18. Caution for handling DEF

    Part number: 09632-71480

    - DEF Only.
      To avoid engine damage or fire, fill with DEF only.
    - Never use diesel fuel.

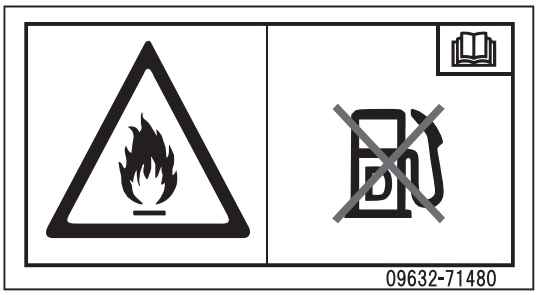

19. Anchor point for tie-off

    Part number: 09850-00641
    Anchor point for personal fall-arrest equipment

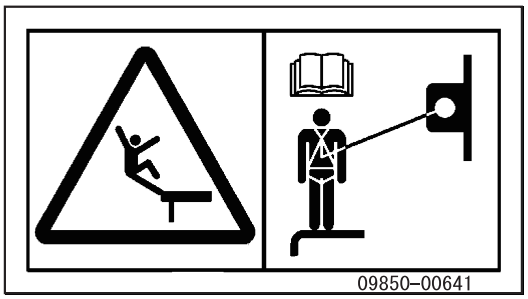

20. Anchor point for tie-off

    Part number: 09850-00881
    Anchor point for personal fall-arrest equipment

21. Prohibition of lifting all the machine

    Part number: 09951-10281
    Do not use the anchor point for tie-off which has this safety label to lift all the machine. There is a danger that the machine falls.

22. Prohibition of lifting all the machine

    Part number: 09951-10401
    Do not use the anchor point for tie-off which has this safety label to lift all the machine. There is a danger that the machine falls.

23. Precautions for Object Avoidance

Part number: 2A5-00-56250

24. Prohibition of rod rotation without cylinder stroke, and Prohibition of Wiring Harness Pulling

(If equipped)
Part number: 707-97-09600

- Do not rotate the rod while it is kept at the specified position.
- Do not pull the sensor harness.

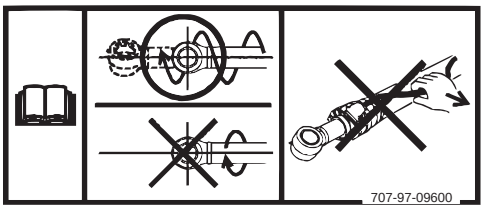

25. Precautions to Handle ICT Monitor, and Precautions for Cylinder Function When You Start Engine

(If equipped)
Part number: 2A5-00-54910

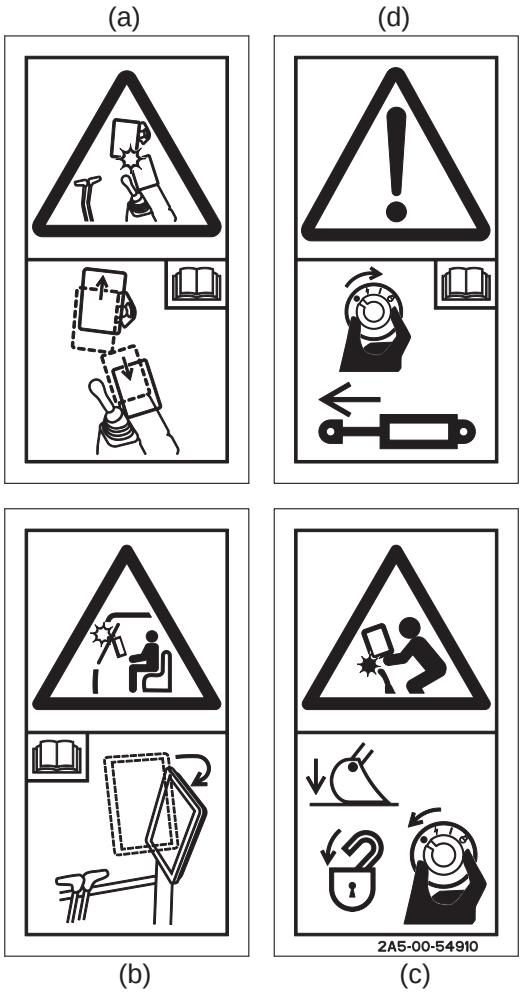

(a) Caution for ICT monitor adjustment position

- The ICT monitor can interfere with the machine monitor in response to the adjustment position.
- Adjust the IC monitor not to let it interference with the machine monitor.

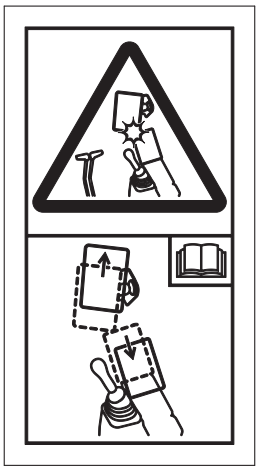

(b) Caution when opening or closing front window

- When you open or close the front window, it can interfere with the ICT monitor.
- Stow the ICT monitor.

(c) Caution when moving ICT monitor

- If you touch the work equipment control levers by mistake, there is a possibility that the machine suddenly moves, and it can cause personal injury or death.
- Before you move the ICT monitor, be sure to lower the work equipment to the ground, set the lock lever to the LOCK position, and stop the engine.

(d) Caution for cylinder function when starting the engine

After you start the engine, operate the bucket cylinder to the stroke end not to let the work equipment lower to the ground, and hold it in this state for 2 seconds. If this operation is not done, the cylinder functions cannot operate correctly.

General Precautions Common to Operation and Maintenance

Mistakes in operation, inspection, or maintenance may result in serious personal injury or death. Before performing operation, inspection, or maintenance, always read this manual and the safety labels on the machine carefully and obey the warnings.

Precautions Before Starting Operation

For Safety Operation

- Only trained and authorized personnel can operate this machine.
- When you operate, or do the inspection or maintenance to the machine, obey the safety precautions and procedures in the Operation and Maintenance Manual.
- Do not operate the machine in the cases that follow.
  - When you are in bad physical condition
  - When you take medication (which causes drowsiness and such)
  - When you are in the influence of alcohol
  - When your mental condition is not stable
- When you do the work with other workers or put a signalman, discuss the work contents in detail and make a decision about the signals to use. Obey the signals which are set when you do the work.

Understand the Machine

Before you operate the machine, read Operation and Maintenance Manual fully. If there is a content that you do not understand in Operation and Maintenance Manual, consult safety personnel.

Preparations for Safe Operation

Precautions for Safety-related Equipment

- Make sure that all the equipment such as protective guards, covers, cameras, mirrors, and radars are correctly installed. If there is a part with damage, replace it immediately.
- Understand how to use the safety equipment and use it correctly.
- Do not remove the safety equipment. Do the maintenance of them to let their functions work correctly.

Inspect Machine

Before you start the operation, do the machine inspection. If a problem is found, do not operate the machine until the repair is completed.

Wear Well-Fitting Clothes and Protective Equipment

- Do not wear loose clothes and accessories. If the protrusions such as the control levers are caught, there is a danger that the machine moves unexpectedly.
- Always wear a hard hat and safety shoes. Wear protective equipment such as protective eyeglasses, face mask, gloves, ear plugs, and personal fall-arrest equipment in accordance with the nature of work.
- Tie up long hair not to get caught in the machine.
- Examine the function of each protective equipment before use.

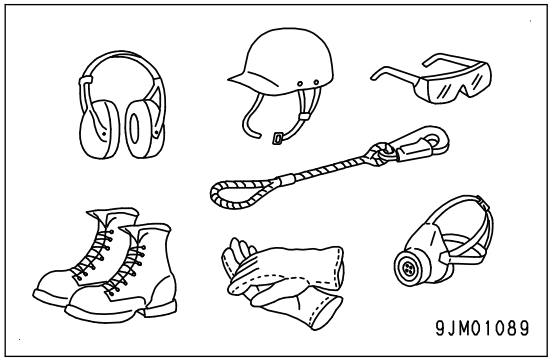

Keep Machine Clean

- If mud, oil, or grease is attached to the machine, there is a possibility that you fall down or fall over when you get on or off the machine, or when you do the machine inspection and maintenance.
  Remove all attached mud, oil, or grease from the machine.
- If water goes into the electrical system, the electric devices can have a malfunction and it can cause a malfunction of machine. If the machine moves unexpectedly by a malfunction, it can cause personal injury or death. When you clean the machine with water or steam, be careful not to spray water directly to the electric devices.
- There is a risk that splashed high pressurized water causes damage to the camera. Be careful that high pressurized water is not splashed on it directly. When you clean the camera, wipe off dirt with soft cloth.

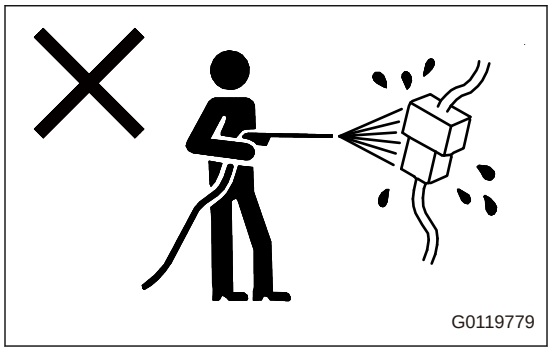

- If you stand on an unbalanced footing or you are in an unbalanced attitude when you clean the camera or mirror, you can fall and have injury. Put a stepladder or step on a level and hard ground, and clean the camera in a stable balance.

Precautions for Inside Operator's Compartment

- When entering the operator's compartment, always remove all mud and oil from the soles of your shoes.
  If you operate the pedal with mud or oil affixed to your shoes, your foot may slip and this may cause a serious accident.
- Do not leave tools or machine parts lying around inside the operator's compartment. If tools or parts get into the control devices, it may obstruct operation and cause the machine to move unexpectedly, resulting in serious personal injury or death.
- Do not stick suction pads to the window glass. Suction pads act as a lens and may cause fire.
- Do not use a cellular phone when driving or operating the machine. This may lead to mistakes in operation, and may cause serious personal injury or death.
- Never bring any dangerous objects such as flammable or explosive items into the operator's compartment.

Supply Fire Extinguisher and First Aid Kit

To reduce the risk of a fire, or personal injury or death, obey these procedures:

- Make sure the position of the fire extinguisher.
  Be sure to know how to use the fire extinguisher.
  Examine the fire extinguisher regularly that it is available.
- Prepare the first aid kit.
  Examine the first aid kit regularly and add to the contents if necessary.

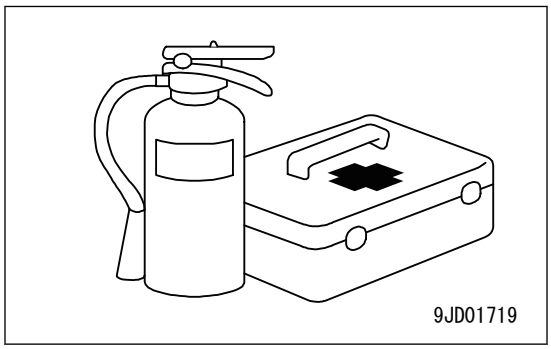

Report Immediately If a Problem is Found

If you find a problem (sound, vibration, smell, instrument malfunction, smoke, oil leakage, or error display on the warning device and monitor) on the machine while you do the operation, inspection, or maintenance of the machine, immediately tell it to the responsible personnel, and complete necessary repairs. Do not operate the machine until the problem is corrected.

Procedures If Fire Occurs

- Turn the starting switch to the OFF position to stop the engine.
- Use the handrails and steps to escape from the machine.
- Do not jump down from the machine. There is a danger that causes personal injury by fall.
- The combustion gas during a fire contains harmful materials which have a bad influence on your body.
  Do not breathe the combustion gas.
- In the unburned remaining left after a fire is extinguished, harmful compounds generated by the fire remains in some cases, and direct contact with skin has a bad effect to the human body.
  Put on rubber gloves always when you handle unburned remaining.
  Chloroprene rubber (neoprene rubber) or polyvinyl chloride (when the temperature is sufficiently low) is recommended for the material of the gloves.
  If you use the cotton gloves, put on the rubber gloves below them.

Precautions to Prevent Fire

Fire Caused by Fuel, Oil, Coolant, or Window Washer Fluid

Do not let an open flame be near flammable substances such as fuel, oil, coolant, or window washer fluid. There is a danger that they catch fire. Obey the items that follow.

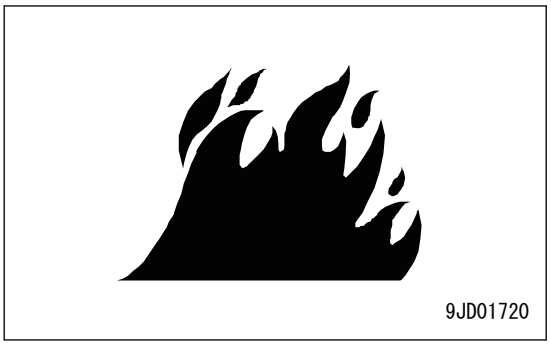

- Do not smoke or use flame near them.
- Stop the engine before you add fuel.
- While fuel or oil is added to the machine, stay near the machine.
- Tighten all the fuel and oil caps securely.
- Be careful not to spill fuel on overheated surfaces or on parts of the electrical system.
- After you add fuel or oil, wipe up the spilled fuel or oil.
- Put the greasy rags and other flammable materials into a safe container and store it in a safe area.
- When you clean the parts with oil, use a non-flammable oil. Do not use the diesel fuel or gasoline. There is danger that they catch fire.
- Do not weld or use a cutting torch to cut the pipes or tubes that contain flammable liquids.
- Keep the oil and fuel in the well-ventilated and the specified area and keep unauthorized persons away from there.
- Before you do the machine grinding or welding work, move the flammable materials to a safe area.

Fire Caused by Accumulated Flammable Objects

- Remove dry leaves, chips, pieces of paper, coal dust, or other flammable materials accumulated or stuck around the engine exhaust manifold, exhaust pipe, or battery, or in the undercover.
- To prevent fires caused by sparks or burned particles from other fires, remove flammable materials such as dry leaves, chips, coal dust, or other flammable materials accumulated or stuck around the cooling system (radiator, oil cooler) or in the undercover.

Fire from Electric Wiring

Short circuit in the electrical system can cause fire. Obey the precautions that follow.

- Keep all the electric wiring connections clean and securely tightened.
- Examine the wiring every day for looseness or damage. Tighten the loose connectors or wiring clamps again. Repair or replace the damaged wiring.

Fire from Pipings

Make sure that all the hose and tube clamps, guards, and cushions are securely fixed in position.

If they are loose, the vibration occurs during operation, and the part rubs against other parts. This can cause damage to the hoses, and the high-pressure oil can spurt out. It can cause a fire and personal injury.

Fire Around Machine Caused by High Temperature Exhaust Gas

Komatsu Diesel Particulate Filter (hereafter KDPF) is installed to this machine.

The KDPF is a device that captures soot in the exhaust gas to clean the exhaust gas. The exhaust gas temperature can increase during the purification (regeneration) of KDPF. Do not let the flammable materials come near the exhaust pipe outlet.

When there are thatched houses, dry leaves or pieces of paper near the jobsite, set the system to the regeneration disable before you start the work. It is because to prevent the fire hazards caused by high-temperature exhaust occurred during the aftertreatment devices regeneration.

Explosion Caused by Light

- When checking fuel, oil, battery electrolyte, or coolant, always use lighting with anti-explosion specifications.
- When taking the electrical power for the lighting equipment from the machine, see “Power Supply Outlet (3-163)”.

Precautions When Getting on or off Machine

Use Handrails and Steps When You Get on or Off Machine

To prevent personal injury caused by slipping or falling off the machine, obey the items that follow.

- Use the handrails and steps shown by the arrows in the figure when you get on or off the machine.

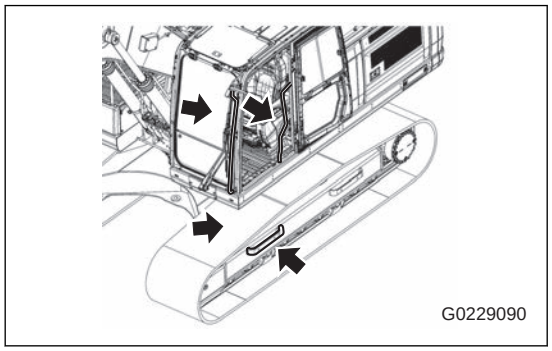

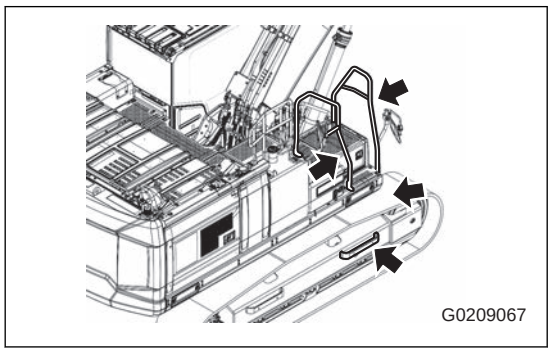

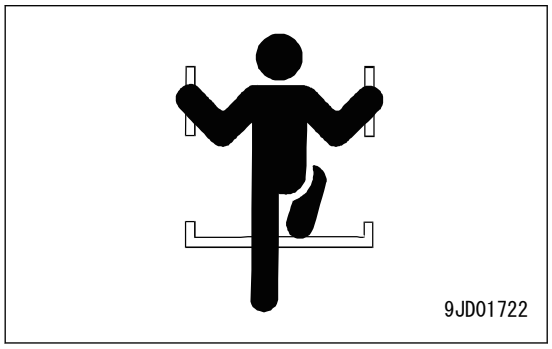

- Be sure to face to the machine, and keep 3 points or more contact by your hands and feet (two feet and one hand, or two hands and one foot) with the handrails and the steps, to support yourself.
- Before you get on and off the machine, examine the handrails and steps if there is no oil, grease, or mud on them. If it is found, wipe it off immediately not to slip. If there is a loose bolt on the handrail and step, tighten it.
  If the handrails and steps have damage or are deformed, they need to be repaired immediately. Consult your Komatsu distributor.
- Do not hold the control levers, armrest, or lock lever when you get on or off the machine. When you get on or off the machine, be careful that your body or clothes do not touch the levers.
- Do not climb on the engine hood or covers where there are no non-slip pads.
- Do not get on or off the machine with tools in your hand.
- The foldable mirror can be rotated. Do not use it as a handrail.

No Jumping on or off Machine

Getting on or off the moving machine can cause serious personal injury or death. Always observe the following.

- Never jump on or off the machine. Never get on or off a moving machine.
- If the machine starts to move when there is no operator on the machine, do not jump on to the machine and try to stop it.

No People on Attachments

Never let anyone ride on the work equipment or other attachments. There is a hazard of falling and suffering serious personal injury or death.

Precautions When You Stand Up from Operator's Seat

Before you stand up from the operator seat in such cases as when you open or close the front window and ceiling window, when you install or remove the lower window, or when you adjust the operator seat, be sure to lower the work equipment to the ground. Operate the operating part (g) of the lock lever (1) to set it to the LOCK position (L), and stop the engine.

If you touch the control levers by mistake, there is a possibility that the machine suddenly moves, and it can cause personal injury or death.

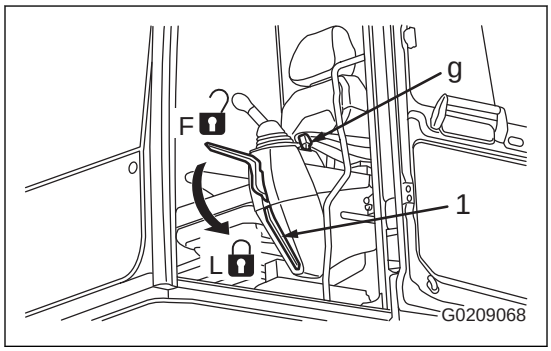

Precautions When You Move Away from Operator Seat

If the correct procedures are not done when you park the machine, the machine suddenly moves off by itself, and this can cause personal injury or death. Obey the items that follow.

- When you go away from the machine, be sure to make the direction of undercarriage and upper structure the same, and lower the work equipment to the ground. Operate the operating part (g) of the lock lever (1) to set it to the LOCK position (L), and stop the engine.
- If the operator seat and console are set at the front side, your body or clothes will easily touch the levers. Flip up the L.H. console or move the operator seat and console to the rear side to keep a sufficient space to get off the machine.
- Apply all the locks and be sure to take the key with you and keep it in the specified location.

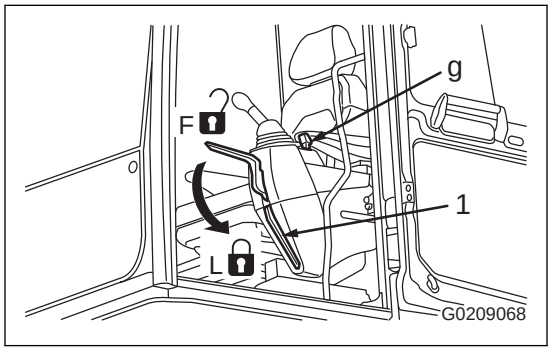

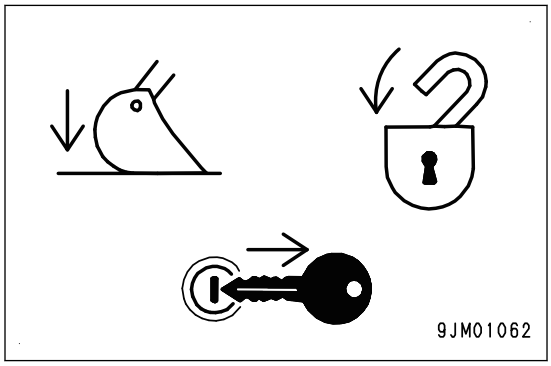

Emergency Exit from Operator's Cab

- If it should be impossible to open the door of the cab, break the window glass with the hammer supplied and use the window as an emergency escape.
- When escaping, remove the pieces of glass from the window frame first and be careful not to cut yourself on the glass. Be careful also not to slip on the broken pieces of glass on the ground.

Do Not Get Caught in Work Equipment

The clearance in the area around the work equipment changes according to the movement of the link. If you are caught, this may lead to serious personal injury or death. Do not allow anyone near any of the rotating or telescopic parts.

Precautions Related to Protective Structures

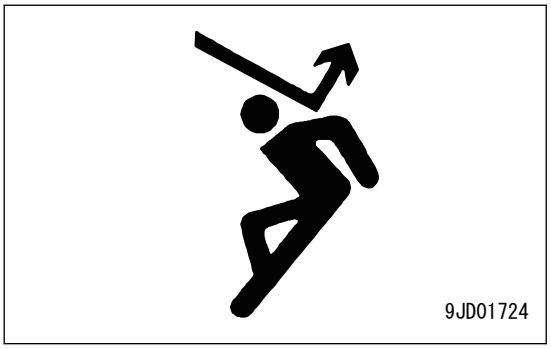

The operator's compartment has a structure to protect the operator (such as ROPS, TOPS, and FOPS). This structure absorbs the shock energy and protects the operator.

If the function of the structure to protect the operator is compromised, the operator is not protected and can have personal injury.

Obey the items that follow.

- Make sure that the load shall not exceed the guaranteed load (on the nameplate).
  The function of the structure to protect the operator cannot be guaranteed when the load exceeds the guaranteed load.
- If you remove the protective structure, do not operate the machine. Before you remove the protective structure (such as in transportation), be sure to consult your Komatsu distributor.
- Do not make any modification to the protective structure.
- Make sure that the protective structure is not damaged or compromised. If the protective structure is compromised or damaged, consult your Komatsu distributor to replace it with Komatsu genuine parts.
- Even if the protective structure is installed, always fasten your seatbelt correctly when you operate the machine.
  If you do not fasten your seatbelt correctly, there is a risk of personal injury.

Protection Against Objects Which Fall, Fly, or Intrude

On a jobsite where there is danger of falling objects, scattering fragments, or other objects that could intrude into operator's cab, installation of additional guarding to protect the operator that is appropriate for the working conditions is recommended.

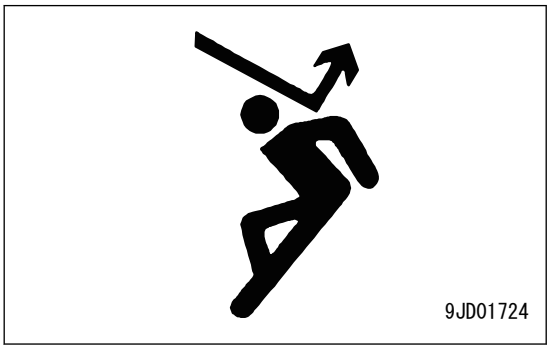

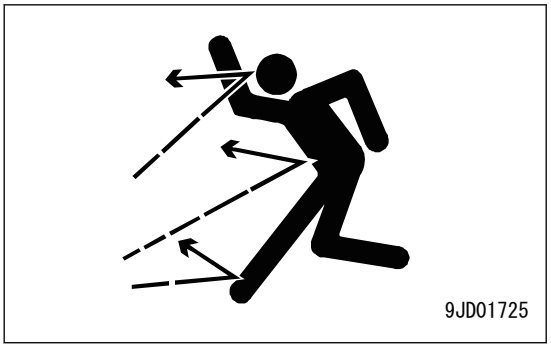

- When operating on jobsite, such as mines or quarries where there may be a hazard of falling rocks, installation of a falling object protective structure FOPS and a front guard (A) if recommended. Always keep all the windows and doors closed when operating. In addition, always check that there is no one except the operator in the surrounding area where there may be a danger of falling objects or scattering fragments.

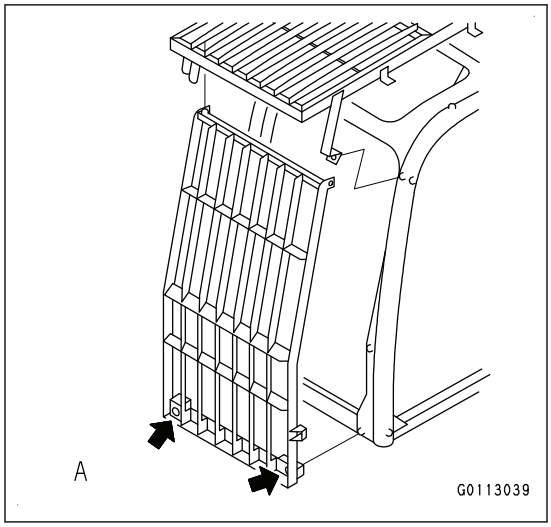

- When using attachments that may create flying debris or scatter fragments, installation of a front window guard is recommended (B). The use of safety glasses by the operator is also recommended. For machines equipped with cabs, always keep the windows and door closed during operation. For machines equipped with open canopies, installation of a mesh front guard and polycarbonate protective sheet is recommended. In addition, always check that there is no one in the surrounding area where there could be a danger of falling objects or scattering fragments.
- Do not weld or drill holes in the machine cab protective structure when installing protective guards. Only use approved, existing mounting surfaces or bosses provided for guarding installation.

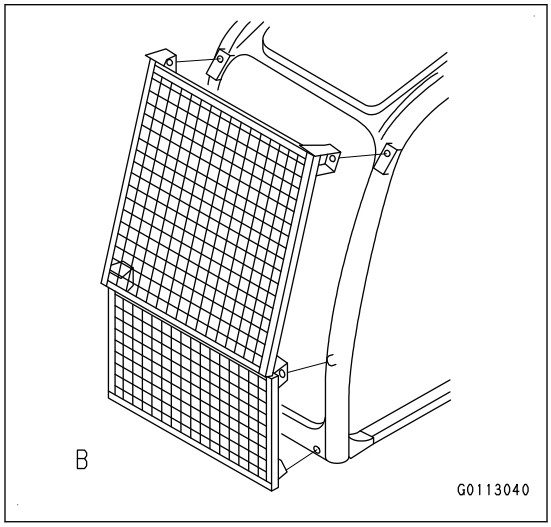

If any glass or polycarbonate protective sheets on the machine are broken or doors do not close properly, replace or repair them immediately.

Do not operate the machine without the necessary guards.

Above precautions are developed for the standard jobsite. Depending on actual jobsite conditions, installation of additional guards may be necessary.

Contact your local distributor for information on safety guards and / or recommendations to reduce the danger of getting hit by objects that could strike the operator's cabin.

Unauthorized Modification

Komatsu is not responsible for personal injury, machine failure, physical loss or damage, or environmental damage caused by unauthorized modifications to the machine.

Before the modification, be sure to consult your Komatsu distributor.

Precautions Related to Attachments and Options

When installing optional parts or attachments, always check local regulations governing their use, contact your local Komatsu distributor before installing if you have any questions. Any injuries, accidents, or product failures resulting from the use of unauthorized attachments or parts will not be the responsibility of Komatsu. Any personal injuries, product failures, physical loss or damage, or influence on the environment resulting from the use of unauthorized attachments or parts will not be the responsibility of Komatsu.

- When installing optional parts or attachments, contact your Komatsu distributor for advice if you have any questions.
- The machine weight should not exceed ROPS certification rating as long as the optional attachments written in the attachment combination table of this manual are installed. When installing optional parts or attachments which are not written in this manual, the machine weight must not exceed the ROPS certification rating. Always contact your Komatsu distributor before installing.
- Installing certain attachment combinations may cause interference and possible damage to the operator's cab or other parts of the machine during operation and could cause serious personal injury or death. Before using unfamiliar attachments, always check for potential cab interference while operating the machine. Always ensure the operator's safety when working with unfamiliar work equipment.
- When installing and using optional attachments, read the instruction manual for the attachment, and the general information related to attachments in this manual.

Quick Coupler Attachment

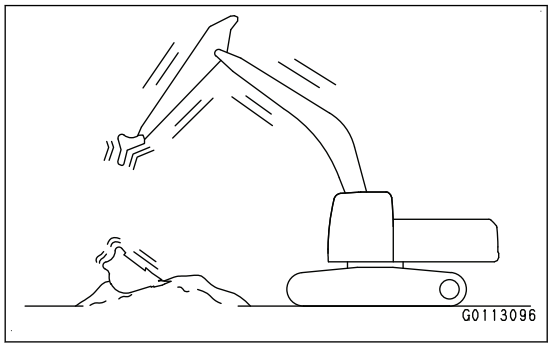

- Inspect all quick couplers to determine if they are subject to unexpected release hazards. Determine whether a manually installed locking pin and installation procedures have been provided by the manufacturer.
- Follow the manufacturer recommendations for maintenance and inspection of the quick coupler to prevent a malfunction of the quick coupler that could result in an unintended release of the attachment.
- Follow the manufacturer's installation procedures and recommendations on testing quick coupler attachments.
- Train and require all personnel to use and follow manufactures installation, use, safety and maintenance procedures when using a quick coupler attachment.

Large Attachments and Combinations

When using attachments that are larger than the standard excavating bucket, always be aware of the possibility that these attachments may come in contact with the operators cab when the work equipment is retracted for travel purposes or positioned close to the machine cab.

If you will be using a hydraulic breaker attachment, never dry fire or activate these attachments especially if they are oriented in the direction of the cab; the possibility of the tool bit ejecting from the breaker may damage the machine or injure the operator.

Depending on the type or combination of attachment, there is a danger that the work equipment may hit the cab or other parts of the machine.

Before using unfamiliar work equipment, review the manufacturer's work equipment safety and operation manuals and check for any potential operator cab interference and operate with caution.

Never operate attachment or bucket near cab of machine.

Always be aware when operating on slopes or traveling, that attachments may change the center of gravity on the machine and increase the possibility of a rollover situation.

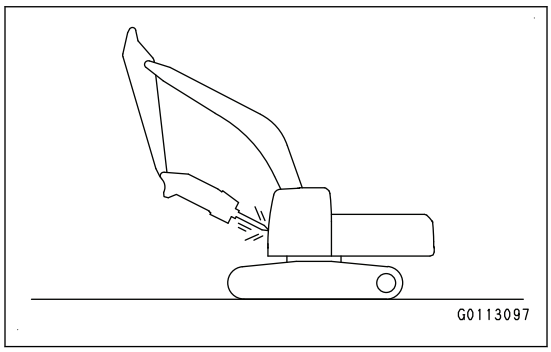

Precautions for CAB Glass

- If the cab glass is broken, stop the work, and repair it immediately.
- If the cab glass on the work equipment side is broken, there is a danger that the operator can be directly hit or caught in the work equipment. Immediately stop the work, and replace the glass.

Precautions When You Operate Engine Inside Building

Start the engine or operate the machine in a well-ventilated area. Exhaust gas contains poisonous materials which have a bad influence on human body.

If you start the engine or if you operate the machine in a poor-ventilated area, let the exhaust gas discharge out and let the clean air come in.

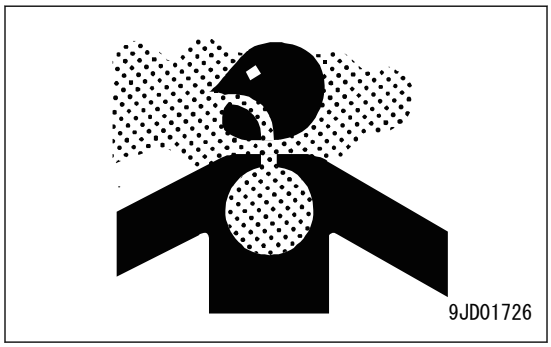

Precautions for Operation

Precautions for Jobsite

Examine Jobsite Conditions

There are many risks in the jobsite that can cause personal injury or death. Before you start the work, examine the items that follow to make sure that there is no danger on the jobsite.

- When you do the work near flammable materials, be careful because they easily cause fire.
- Examine the terrain and ground condition at the jobsite, and find the safe work procedure. Do not do the work on the jobsite where there is danger of landslides or falling rocks.
- Consult the local management company to make sure that there are no buried objects such as water pipes, gas pipes, or high voltage pipes. If there are buried objects, identify their position, and do the work carefully to avoid damage on them.
- Keep the unauthorized persons away from the jobsite.
- Especially when the work is done on a road, put a signalman or install the fences around the jobsite to make sure the safety of the pedestrian and vehicles.

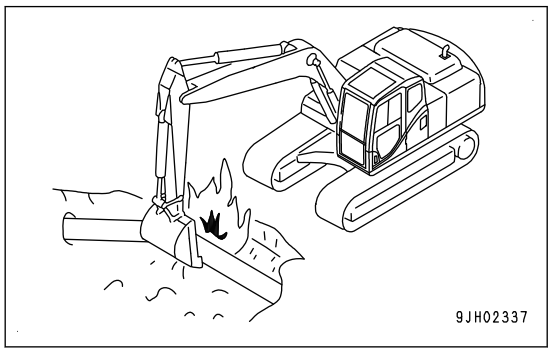

- Before you move or operate the machine on a shallow or soft ground, examine the water depth, flow speed, and the condition of the ground and terrain. Avoid such area that will cause problem for the travel operation.
- Keep the travel path of the jobsite in good condition, and make sure that there is no obstruction for the travel operations.
- When you work with other machines, vehicles, or workers at the jobsite obey local jobsite rules.

Precautions When Working on Loose Ground

- Avoid driving or operating the machine near the edge of cliffs, road edges, and deep ditches. The ground may be weak in such areas. If the ground should collapse under the weight or vibration of the machine, there is a hazard that the machine may fall or tip over. Remember that the soil is weak in these areas, after heavy rain or blasting or after earthquakes.
- When working on embankments or near excavated ditches, there is a hazard that the weight and vibration of the machine will cause the soil to collapse. Before starting operations, take steps to ensure that the ground is safe and to prevent the machine from rolling over or falling.

Do Not Go Close to High-Voltage Cables

Do not travel or operate the machine near electric cables. There is a hazard of electric shock, which may cause serious personal injury or death. On jobsites where the machine may go close to electric cables, always observe the following.

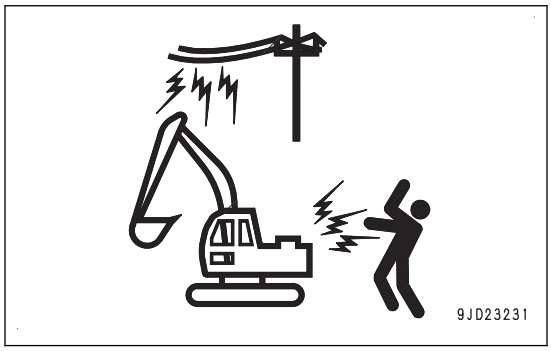

- Before starting work near electric cables, inform the local power company of the work to be performed, and ask them to take the necessary action.
- Even going close to high-voltage cables can cause electric shock. Always maintain a safe distance (see the table) between the machine and the electric cable. Check with the local power company about the voltage of cables and safe operating procedure before starting operations.

Voltage of Cables	Safety Distance
100 V, 200 V	Min. 2 m {7 ft}
6600 V	Min. 2 m {7 ft}
22000 V	Min. 3 m {10 ft}
66000 V	Min. 4 m {14 ft}
154000 V	Min. 5 m {17 ft}
187000 V	Min. 6 m {20 ft}
275000 V	Min. 7 m {23 ft}
500000 V	Min. 11 m {36 ft}

- To prepare for any possible emergencies, wear rubber shoes and gloves. Lay a rubber sheet on the operator's seat, and be careful not to touch the chassis with any exposed part of your body.
- Use a signalman to give warning if the machine approaches too close to the electric cables.
- When performing operations near high voltage cables, prohibit anyone other than related persons to come close to the machine during operation.
- If the machine should come too close or touch the electric cable, to prevent electric shock, the operator should not leave the operator's compartment until it has been confirmed that the electricity has been shut off. Also, prohibit any other persons to come close to the machine.

Make Sure of Good Visibility

Although this machine is equipped with mirrors and cameras to ensure good visibility, there are places that cannot be seen from the operator's seat. Be careful when performing operation.

When driving the machine or performing operations in places with poor visibility, it is dangerous and may cause serious personal injury or death because it is difficult to check for obstacles and condition of the jobsite. When driving the machine or performing operations in places with poor visibility, always observe the following.

- Allocate a signalman for jobsite duty if there are areas where the visibility is poor.
- Only one signalman should give signals.
- When working in dark places, turn on the working lamp and headlamps installed to the machine, and set up additional lighting in the work area if necessary.
- Stop operations if the visibility is poor because of mist, snow, rain, or dust.
- Before you start the work, make sure that there is no dirt on all the mirrors. After you examine it, adjust the angle of the mirror to secure the visibility.
- When you clean the camera, wipe off dirt with a soft cloth.
  Make sure that the image is clear on the monitor.
  If you stand on an unbalanced footing or you are in an unbalanced attitude when you clean the camera, you can fall off and have injury. Put an applicable stepladder or step on the level and hard ground, and clean the camera in a stable attitude.

Check Signs and Signalman's Signals

If signals and labels are not clear, serious personal injury can result from downward slip, overturn or accidental contact with nearby people or obstacles. Always observe the following.

- Set up labels to inform of road edges and soft ground. If the visibility is not good, position a conductor if necessary. Operator should pay careful attention to the labels and follow the instructions from the conductor.
- Only one signalman should give signals.
- Make sure that all workers understand the meaning of all signals, signs, and labels before starting work.

Beware of Asbestos Dust

Asbestos dust in the air can cause lung cancer if it is inhaled. There is danger of inhaling asbestos when working on jobsite where demolition work is performed or industrial waste is handled. Always observe the following.

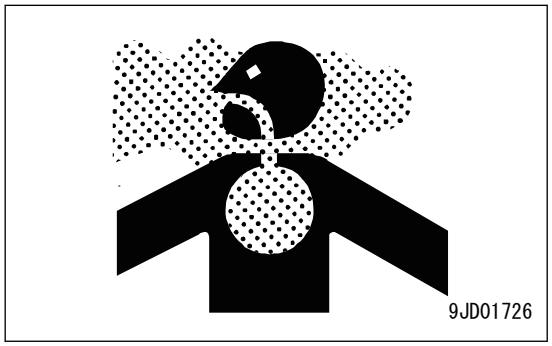

- Spray water to keep down the dust.
- Do not use compressed air.
- If there is danger that there may be asbestos dust in the air, always operate the machine from an upwind position, and make sure that all workers operate on the upwind side.
- All workers should use anti-dust masks.
- Prohibit other personnel from coming close to the machine during operation.
- Always observe the regulations for jobsite and environmental standards.

This machine does not contain asbestos, but any part which is not the genuine part, it has risk of containing asbestos. Always use Komatsu genuine parts.

Precautions for ICT Monitor

(If equipped)

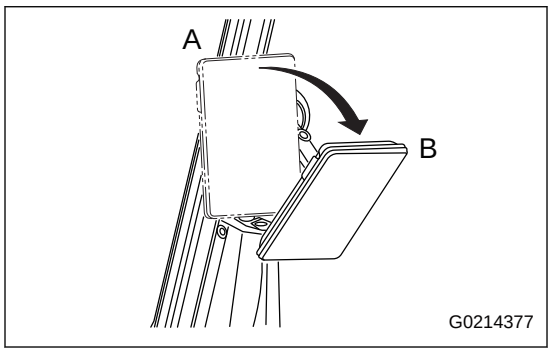

- When you remove, adjust the position, or store the ICT monitor, set the lock lever to the LOCK position, and stop the engine.
- When you adjust the position (A) of the ICT monitor, adjust it to the position where the ICT monitor does not interfere with the machine monitor. If the overall seat is moved forward, the machine monitor is moved up and the machine monitor interferes with the ICT monitor in some area when you go away from the operator seat. Accordingly, move the seat rearward when you go away from the operator seat. Or, move the ICT monitor up and lock it.
- Before you adjust the position of the ICT monitor, loosen the mount handle. After the ICT monitor is set to the correct position, tighten the mount handle securely, and make sure that the ICT monitor is held securely. If the handle is not tightened sufficiently, the ICT monitor can fall off during the work, and it can cause personal injury or death.
- If you adjust the position of the ICT monitor while the mount handle is not loosened, the mount and ICT monitor can have damage.
- Before you open or close the front window, store the ICT monitor in the storage position (B). After you open or close the front window, move the ICT monitor back to its initial position (A) immediately. Do not start the engine when the ICT monitor is in the storage position (B).
- Open and close the front window slowly while you make sure that it does not interfere with the ICT monitor.
- If you do not set up the monitor correctly, it can cause a failure of the machine or personal injury or death by malfunction. If you find a problem during the work, stop the work immediately.
- It is dangerous if you only rely on the ICT monitor screen to do the work. Do the visual inspection when you do the work.

Start Engine

Use Warning Tags

“DANGER! Do NOT operate!” warning tag shows that the machine is during the inspection and maintenance.

Do not ignore the warning tag and do not operate the machine. There is a danger of personal injury or death such that you are caught in the machine. Do not start the engine. Do not touch the levers.

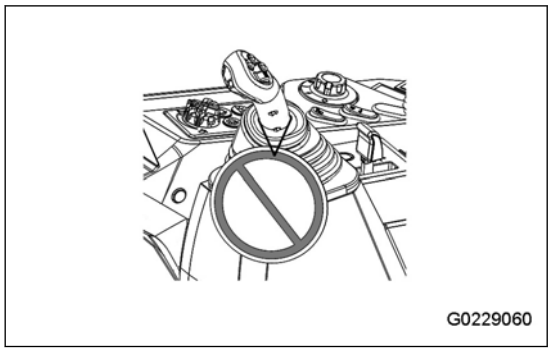

Checks and Adjustment Before You Start Engine

Before you start the engine, examine the items that follow and make sure that there is no problem to operate the machine. If these checks are not done, it can cause bad effect to machine operation. There is a danger that personal injury or death is caused.

- Remove all dirt from the surface of the window glass to keep a good view.
  When you clean the right window, use a tool such as a mop.
- Do the walk-around check securely. For details, see “Walk-Around Check (3-201)”.
- Remove all dirt from the surface of the lens of the headlamps and working lamps, and make sure that they come on correctly.
- Examine the coolant level, fuel level, oil level in the engine oil pan, clogging of the air cleaner, damage of the electric wiring, or such.
- Examine the battery terminals for looseness or corrosion.
- Make sure that there is no mud or dirt accumulated around the movable parts of the pedals, and that the pedals operate correctly.
- Adjust the operator seat to a position where you can operate the machine easily. Make sure that there is no damage or wear on the seat belt or mounting hardware.
- Make sure that the gauges operate correctly, examine the angle of the mirror, and make sure that the control levers are all at the NEUTRAL position.

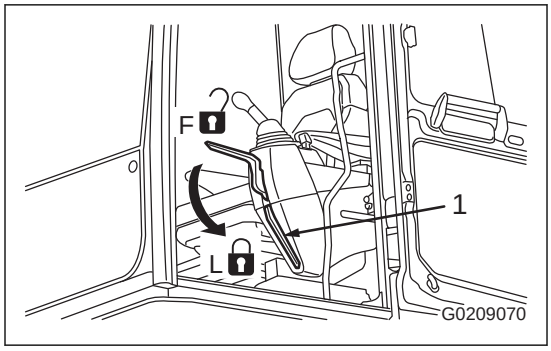

- Before you start the engine, make sure that the lock lever (1) is set to the LOCK position (L).
- Adjust the mirrors to the position that you can see the rear of the machine easily from the operator's seat.
  For the adjustment, see “How to Adjust Mirrors (3-222)”.
- Adjust the cameras to the angle that you can see the area around the machine easily from the operator seat. For adjustment, consult your Komatsu distributor.
- Adjust the armrest and console to a position where you can do the operation easily, and then fix it securely after adjustment. If you operate the machine in an unstable posture, mistake in operation can occur, and it can cause personal injury or death.
  For the adjustment, see “How to Adjust Operator Seat (3-217)”.
- Make sure that there is no person or obstacle above, below, or around the machine.

Precautions When Starting Engine

The machine may suddenly move off and this may lead to serious personal injury or death. Always observe the following.

- Start the engine only while sitting down in the operator's seat.
- When starting the engine, sound the horn as a warning.
- Prohibit other personnel to get on the machine.
- Do not attempt to start the engine by short-circuiting the engine starting circuit. This may cause fire, serious personal injury or death.

In Cold Weather

- If the work equipment is operated without sufficient warm-up operation of the machine, there is a possibility that the response of the work equipment to the movement of the control lever and the control pedal becomes slow, and that the work equipment cannot respond to the operator's desires. So be sure to do the warm-up operation. Especially in cold weather, be sure to do the warm-up operation sufficiently.
- When battery electrolyte is frozen, do not charge the battery or start the engine with a different power source. There is a danger that the battery will catch fire and explode.
  Before you charge the battery or start with the other power supply, thaw the battery electrolyte and make sure that there is no leak of battery electrolyte.

Start Engine with Jumper Cables

If a mistake is made in the method to connect the jumper cables, it can cause the battery explosion, so be sure to obey the items that follow.

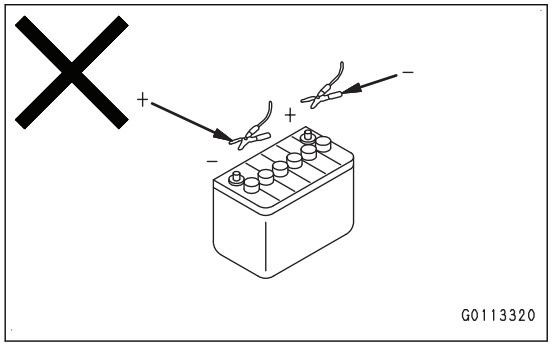

- Be sure to put on the protective eyeglasses and rubber gloves when you start the engine with the jumper cables.
- When you connect a normal machine to a failed machine with the jumper cables, be sure to use the normal machine with the same battery voltage as the failed machine.
- When you start the engine with the jumper cables, do the startup operation with 2 workers (one worker sits on the operator's seat and the other handles the battery).
- When you use other machine for the start-up operation, be careful that the normal machine does not touch the failed machine.
- When you connect the jumper cables, turn the starting switches of the failed machine and the normal machine to the OFF position. If the failed machine has the battery disconnect switch, set it to the OFF position, and then set it to the ON position again after the cables are connected.
  It is dangerous that the machine possibly moves when the power is connected.
- Be sure to connect the positive (+) terminal first when you connect the jumper cables. Disconnect the negative (-) terminal (ground side) first when you disconnect them.
- Do not let the clips touch other clips or the machine when you disconnect the jumper cables.
- For the procedure to start the machine with the jumper cables, see Operation, “Start Engine with Jumper Cables (3-552)”.

Precautions for Operation

Checks Before Operation

If the check before starting is not done, the machine performance will not be fully used, and there is a danger that causes personal injury or death.

Do the inspection in a large area where has no obstacle, and be very careful around the machine. Keep persons away from near the machine.

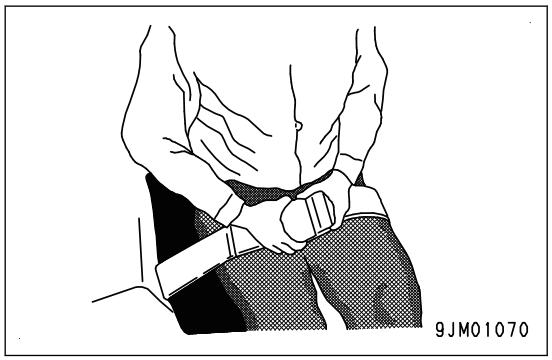

- Be sure to fasten the seat belt. There is a danger that operator is thrown out from the operator seat and gets personal injury when brake is applied suddenly.
- After you log on to the system, the lever pattern and work equipment lever switch setting are shown on the machine monitor. Be sure to see the display.
- Examine the operation state of the work equipment, travel, brake, swing, and such.
- Make sure that sound, vibration, heat, smell is normal, and there is no abnormality in instrument, oil leakage, fuel leakage.
- Be sure to repair the defective part when a problem is found.

Precautions When Traveling in Forward or Reverse and Swinging

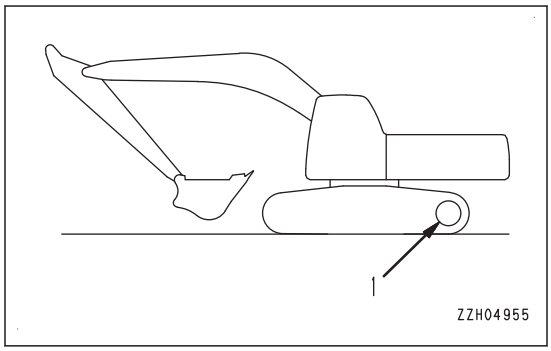

- When driving the machine, drive with sprocket (1) at the rear of the machine. If sprocket (1) is at the front, the operation of the travel levers will be the opposite of the actual direction of travel, so there is a hazard that the machine may travel in an unexpected direction, leading to serious injury or death.
- Always lock all the doors and windows of the operator's compartment in position regardless of whether it is open or closed.
  Always close all the windows and doors on jobsites where there is danger of scattering fragments, and things which may intrude into operator's cab.
- Prohibit anyone other than the operator to get on the machine.
- If there are any people in the area around the machine, there is danger that they may be hit or caught by the machine, and this may lead to serious personal injury or death. Before starting travel or swing, be sure to observe the following.
  - Always operate the machine only when seated on the operator's seat.
  - Before starting to move, check again that there is no people or obstacle in the surrounding area.
  - Before moving, sound the horn to warn people in the surrounding area.
  - Check that the travel alarm and other alarms work properly.
  - If there is an area in the rear of the machine which cannot be seen, position a signalman. Be extremely careful not to hit any people or object, and drive or swing slowly.

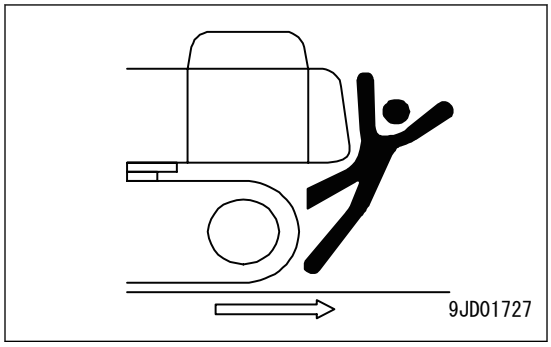

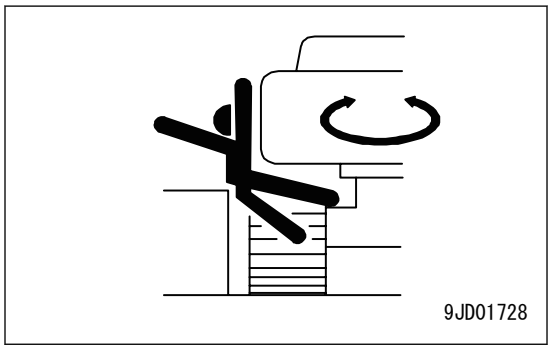

Always be sure to perform the above precautions even when the machine is equipped with mirrors and cameras.

Precautions When You Travel

There is a danger of personal injury or death caused by that if the machine falls over while it travels, or a person gets in contact with the machine. Obey the precautions that follow.

- Keep a sufficient distance from persons, constructions, and other machines.
- When traveling on a level ground, keep the work equipment at height (a) of approximately 40 to 50 cm {15.7 to 19.7 in} above the ground. If that height is not maintained between the work equipment and the ground, the work equipment may get stuck in the ground and the machine may tip over.

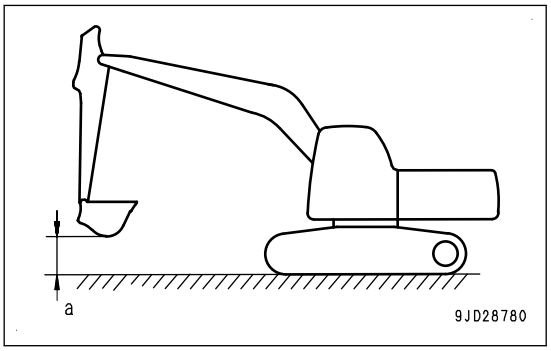

- If the view to the right side is poor, raise the boom to ensure better visibility.
- Always turn the auto-deceleration switch OFF (cancel) when driving the machine on rough ground or steep slopes. If the machine is operated with the auto-deceleration system ON (activated), the engine speed will rise and the machine travel speed may suddenly become faster.
- Do not ride over the obstacles. If you cannot avoid an obstacle, keep the work equipment near the ground and move the machine at low speed. The machine falls over easily in the lateral direction. Do not ride over obstacles that can cause the machine to tilt too much in a lateral direction.

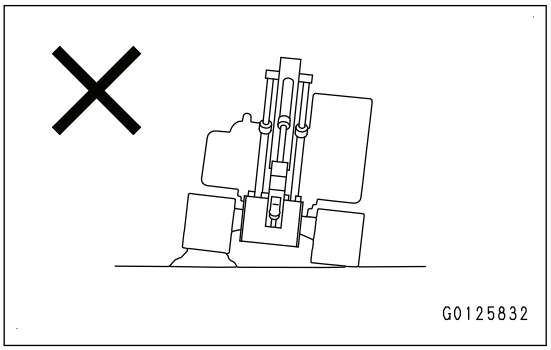

- When driving the machine on the rough ground, drive it at low speed and do not operate the steering suddenly. There is a danger that the machine may tip over. The work equipment may hit the ground, and the machine may lose its balance, or it may damage the machine or structures in the area.
- Do not exceed maximum allowable performance specifications, such as the specified maximum allowable load, during machine operation.
  If you use the machine above the allowable performance specifications, it can fall over or cause damage to the work equipment.
- Before the machine goes over bridges or constructions, make sure they are sufficiently strong to support the weight of the machine. When the machine travels on a public road, consult the local authorities and obey the instructions.
- In areas where there are the restrictions that follow, operate the machine and work equipment carefully and slowly not to touch the objects.
  - In the tunnels or buildings
  - Below the bridges
  - Below the electric cables

Precautions When You Travel on Slopes

To prevent falling over and sideways slip, obey the items that follow.

REMARK

If the machine stop control of the object avoidance is activated and the machine suddenly stops during travel on a slope, the machine can become unstable.
To use the object avoidance safely, read the precautions and how to handle this system.

Precautions When You Use Object Avoidance
“When Object Avoidance Has Failure (3-352)”
“Situations Where Object Avoidance May Not Sense Target Correctly (3-353)”
“Situations Where the Machine May Become Unstable Because of Sudden Stop (3-358)”
“Situations Where You May Be Unable to Evacuate Machine Because of Machine Stop Control (3-359)”
“Situations Where You May Need to Turn Off Machine Stop Control of Object Avoidance (3-360)”

How to Handle Object Avoidance
“Monitor Display (3-361)”
“Function of Object Avoidance (3-362)”
“Monitor Display of Object Avoidance (3-365)”
“How to Set Object Avoidance (3-367)”

- Hold the work equipment at the height (a) of 20 to 30 cm {7.9 to 11.8 in} above the ground to lower the work equipment to the ground and stop the machine immediately in case of an emergency.
- When the machine goes an uphill, set the work equipment to the uphill side, and when it goes a downhill, set it to the downhill side while you make sure that the condition of the ground below the undercarriage is safe, and move the machine carefully.

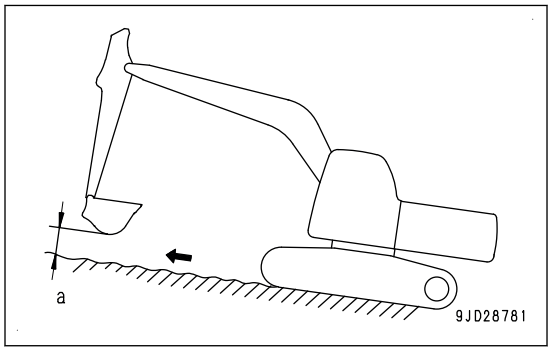

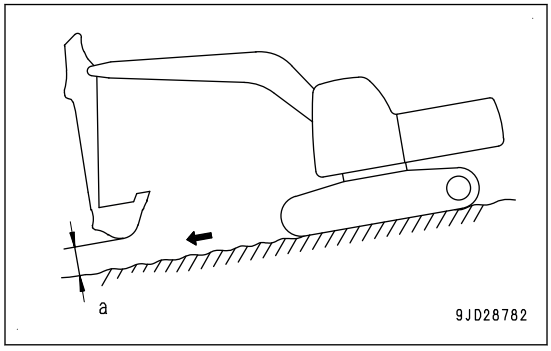

- When the machine goes a steep uphill, extend the work equipment to the front to keep the balance of the machine, hold the work equipment at the height (a) of 20 to 30 cm {7.9 to 11.8 in} above the ground, and move the machine at low speed.

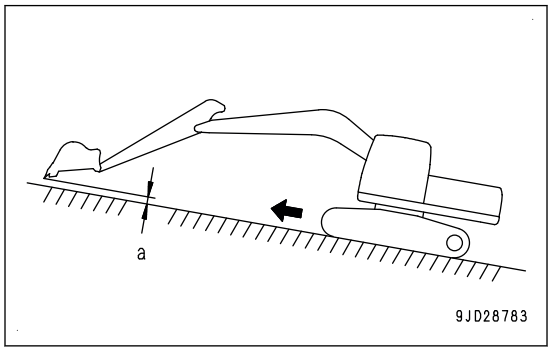

- When you operate the machine on a downhill, lower the engine speed, move the travel lever to near the NEUTRAL position, and operate it with low speed.

- Move the machine straight to the slope. Do not move the machine diagonally across the slope, or in a horizontal direction. It is very dangerous.
- On a slope, do not steer the machine or do not go across the slope. If you need to change the direction, move the machine to the level ground and find other path.

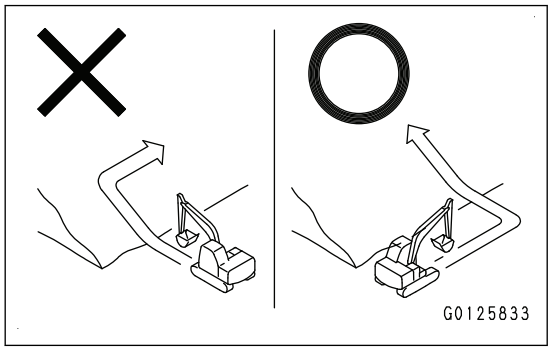

REMARK

If the machine stop control of the object avoidance is activated while the machine travels across the area where the angle of the slope changes, the machine balance can be lost and it is very dangerous. You must not travel across on a slope because it is very dangerous operation. If it is necessary to change the route, go down to a level area, and the use a safe route such as a detour. If it is necessary to travel across, set the machine stop control to OFF.

For details how to handle the object avoidance, see the sections below.
“Monitor Display (3-361)”
“Function of Object Avoidance (3-362)”
“Monitor Display of Object Avoidance (3-365)”
“How to Set Object Avoidance (3-367)”

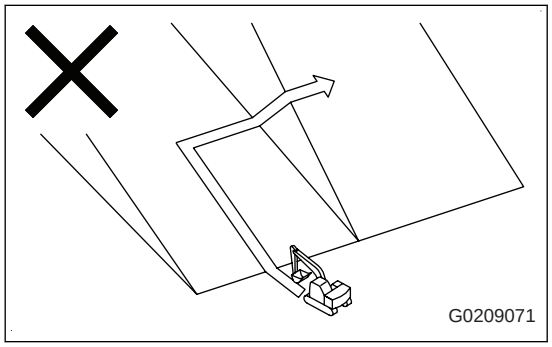

- Do not operate the machine on the slope with iron plates. The machine can slip easily even on a shallow slope, and it is dangerous.
- Set the travel speed as low as possible on the grasses and fallen leaves. The machine can slip easily even on a shallow slope, and it is dangerous.
- If the engine stops, move all control levers to the NEUTRAL position immediately, set the lock lever to the LOCK position, and start the engine.

Precautions When Operating on Slopes

- When working on slopes, there is a hazard that the machine may lose its balance and turn over when performing swing or work equipment operations. This may lead to serious personal injury or death. Always provide a stable place when performing these operations, and operate carefully.
- Do not swing the work equipment from the uphill side to the downhill side when the bucket is loaded. This operation is dangerous, and may cause the machine to turn over.
- If the machine has to be used on a slope, pile the soil to make a platform (A) that will keep the machine as horizontal as possible.
- Do not work on a slope covered with the steel plates. Even with slight slopes there is a hazard that the machine may slip.

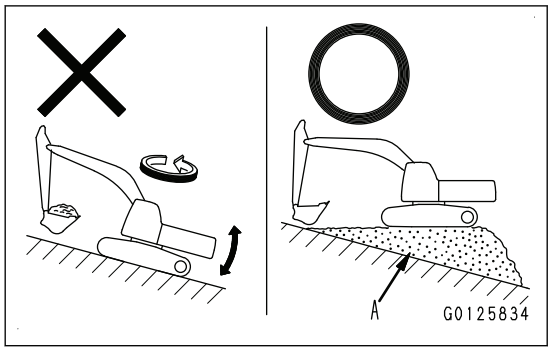

Precautions When You Operate Machine

- In areas where there are the restrictions that follow, operate the machine and work equipment carefully and slowly not to touch the objects.
  - In the tunnels or buildings
  - Below the bridges
  - Below the electric cables
- To prevent accidental contacts, operate the machine at a speed that the machine can be operated safely indoors, or in a narrow space, or in a crowded area.
- Do not use the machine to the level that exceeds the allowable performance such as the specified maximum allowable load.
  If the machine is used above the allowable performance, it can fall over or cause damage to the work equipment.
  When you do the work on rough ground or on slope, make sure that the machine is stable.
- The machine performance such as maximum allowable load is specified based on the condition that the machine is stopped on a level and hard ground.

Prohibited Operations

There is a danger of personal injury or death if the machine tips over or fall, or the ground at the jobsite breaks or object of demolition work collapses.

Also, the dangerous operation that is prohibited in the Operation and Maintenance Manual can be more dangerous if the machine stop control of the object avoidance, 2D boundary control, and machine control function is activated.

Obey the items that follow.

- If the work is done at the bottom of a cliff, there is a danger of landslide or falling rocks. Do not excavate at the bottom of a cliff.

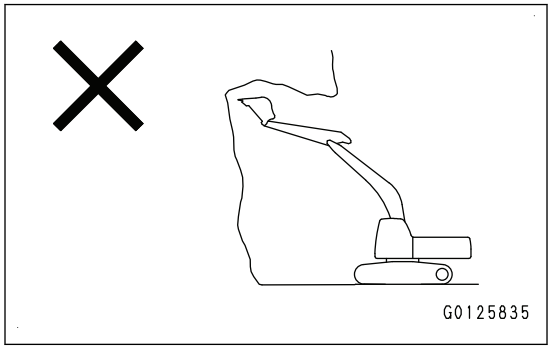

- Do not excavate too deeply below the front of the machine. The ground below the machine can break and cause the machine to fall.

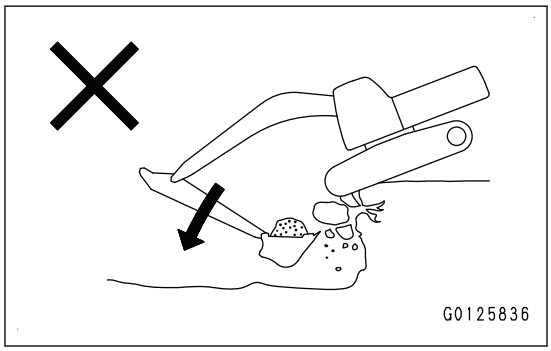

- When you operate the machine near the cliff or road shoulder, do the work with the tracks at a right angle to the cliffs and shoulders and the sprocket at the rear side for quick evacuation.

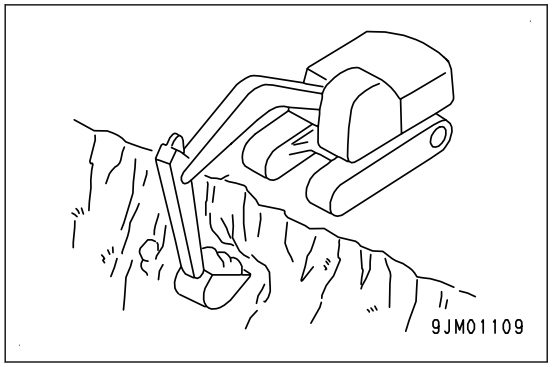

- Do not do demolition of the ground below the machine because there is a danger that the ground becomes unbalanced and the machine falls.

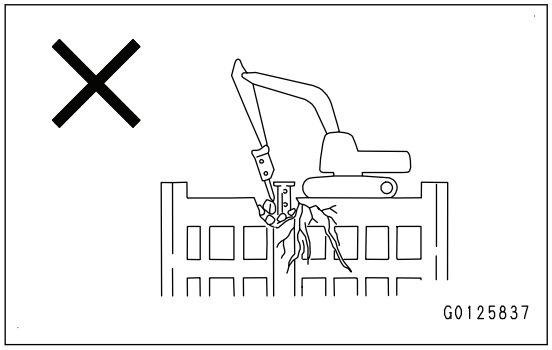

- Do not do demolition overhead when you do demolition work. Personal injury or death can be caused when the broken pieces fall or the building is broken down.

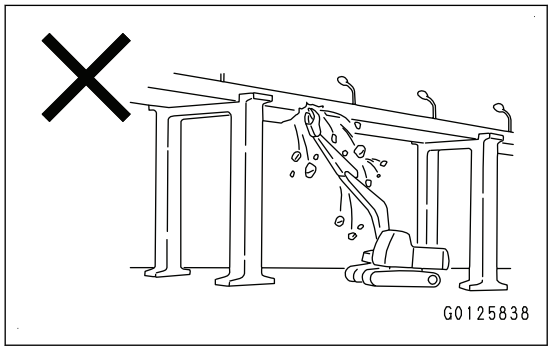

- Do not crush the object with the work equipment because there is a danger that causes personal injury or death by scattered crushed material, defective work equipment, or falling of the machine by reaction of the hit.
- Do not let the bucket go over above the operator's head or operator's seat of the transportation machine such as a dump truck. There is a possibility that soil falls off and the bucket hits the machine. These can cause the personal injury or death in some cases.

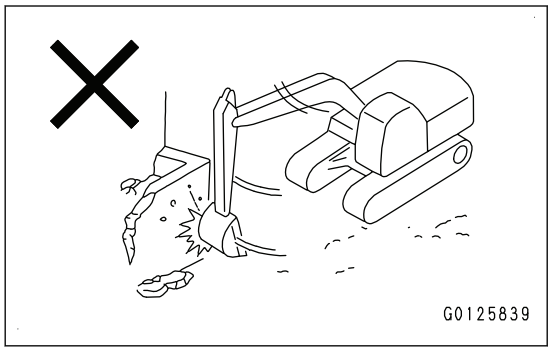

- When the work is done on top of the structure such as a building or from above, examine the strength and structure before you start the operations. Personal injury or death can be caused by the broken building or structure.
- In general, the machine can fall over easily when the work equipment is in the lateral direction compared when it is in the longitudinal direction against the forward and reverse direction of tracks.
  Be very careful when the machine swings sideway from the longitudinal position while a load is applied to the work equipment. There is a danger that the machine falls over.
- There is a danger that the machine becomes unbalanced and tips over when heavy attachment (such as demolition crusher) is used. Obey the items that follow not only on a slope but also on a level ground.
  - Do not swing suddenly. Do not lower the work equipment suddenly. Do not stop the work equipment suddenly.
  - Do not suddenly extend or retract the boom cylinder. The shocks can cause the machine to fall over.

- Do not do the work such as pinching with the tip when do the work with fork or grapple.

  Object is easy to slip and fall, and there is a danger that it causes damage to the machine or causes personal injury or death.

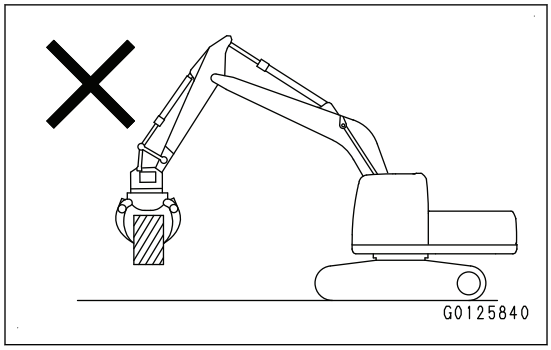

Precautions When Operating on Snow or Frozen Surfaces

- Snow-covered or frozen surfaces are slippery, so be extremely careful when traveling or operating the machine, and do not perform abrupt lever operation. Machine may slip even on a slight slope. Be particularly careful when working on slopes.
- Frozen road becomes soft when the temperature rises, and the machine may tip over or be not able to escape. Be particularly careful when working on frozen road.
- It is dangerous that the machine enters deep snow. The machine may tip over or become buried in the snow. Be careful not to go off the road or to get trapped in a drift of snow.
- When performing snow removal, the road and objects placed beside the road are buried in the snow and cannot be seen. Be careful.

Precautions When You Park Machine

Unexpected movement of the parked machine can cause personal injury or death. Obey the items that follow.

- Park the machine on a hard and level ground.
- Select an area where there is no risk of landslides, falling rocks, or flooding.
- Lower the work equipment to the ground.

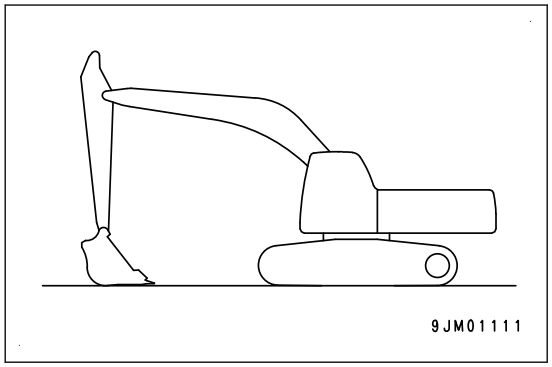

- When you go away from the machine, be sure to make the direction of undercarriage and upper structure the same, and lower the work equipment to the ground. Operate the operating part (g) of the lock lever (1) to set it to the LOCK position (L), and stop the engine.
- If the operator seat and console are set at the front side, your body or clothes will easily touch the levers. Flip up the L.H. console or move the operator seat and console to the rear side to keep a sufficient space to get off the machine.
- Be sure to close the operator's cab door, and apply all the locks. Remove the key not to let an unauthorized person move the machine, and keep it in the specified area.

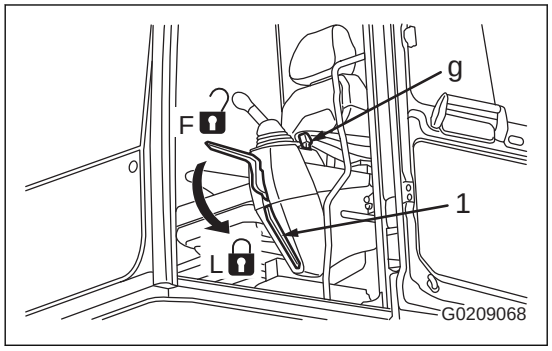

- If you need to park the machine on a slope, obey the items that follow.
  - Set the work equipment to the downhill side, and thrust it into the ground.
  - Put chocks on the tracks not to move.

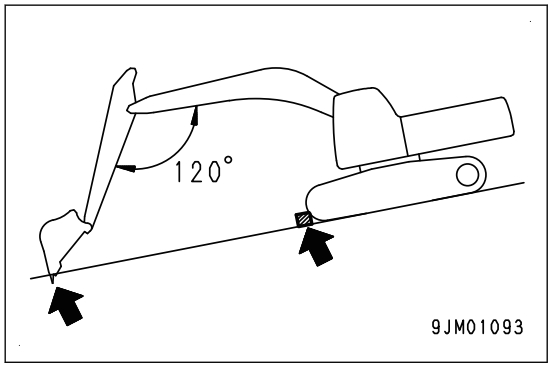

Precautions for Transportation

When the machine is transported on a trailer, serious personal injury or death may result because of the accident during transportation. Always observe the following.

- Always check the machine dimensions carefully. Depending on the work equipment and optional devices installed, the machine weight, transportation height, and overall length differ.
- Check beforehand that all bridges and other structures on the transportation route are strong enough to withstand the combined weight of the transporter and the machine being transported.
- This machine may need to be divided into components for transportation depending on the regulation. When transporting the machine, consult your Komatsu distributor.

Precautions When You Load and Unload

If you do not handle the machine correctly when you load or unload the machine, it is dangerous that the machine can fall over or fall off. This work must be done very carefully. Obey the items that follow.

REMARK

If the machine stop control of the object avoidance is activated and the machine suddenly stops when you load or unload the machine, the machine can become unstable. Set the machine stop control to OFF when you load or unload the machine. To use the object avoidance safely, read the precautions and how to handle this system that follow before you operate the machine.

Precautions When You Use Object Avoidance

“When Object Avoidance Has Failure (3-352)”
“Situations Where Object Avoidance May Not Sense Target Correctly (3-353)”
“Situations Where the Machine May Become Unstable Because of Sudden Stop (3-358)”
“Situations Where You May Be Unable to Evacuate Machine Because of Machine Stop Control (3-359)”
“Situations Where You May Need to Turn Off Machine Stop Control of Object Avoidance (3-360)”

How to Handle Object Avoidance

“Monitor Display (3-361)”
“Function of Object Avoidance (3-362)”
“Monitor Display of Object Avoidance (3-365)”
“How to Set Object Avoidance (3-367)”

- Load or unload the machine on a hard and level ground only. Avoid the road edge or area near the cliff.
- Do not use the work equipment to load or unload the machine. There is danger that the machine can fall over or fall off.
- Be sure to use the ramps that have sufficient length, width, and strength. Set the ramps correctly not to be moved or fallen off.

  (1) Chock
  (2) Ramp
  (3) Center of ramp
  (4) Angle of ramp: 15° or less

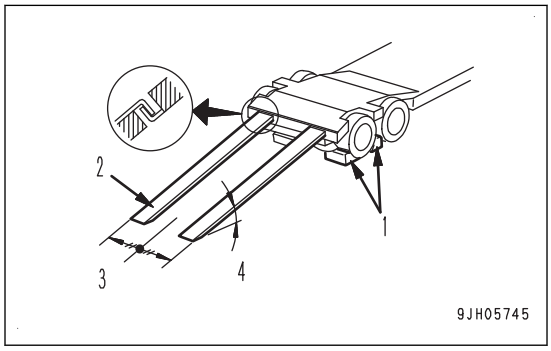

- To prevent the machine slip, make sure that no grease, oil, ice, water, or such are found on the ground surface, ramps, and loading platform. Remove them if found. Remove mud off from the undercarriage of the machine. Especially on a rainy day, be very careful as they are slippery.
- Be sure to turn off (cancel) the auto-deceleration switch. If you operate the machine while the auto-deceleration switch is ON (activated), there is danger that the engine speed suddenly increases, the machine suddenly moves off, or the machine travel speed becomes faster.
- Set the engine speed to low idle, and operate the machine slowly.

- When the machine is on the ramps, do not operate the lever other than the travel levers (travel forward and reverse).
- Do not correct your steering on the ramps. If necessary, move the machine from the ramps to the ground, correct the direction, and then go to the ramps again.
- The center of gravity of the machine will change suddenly at the joint between the ramps and the loading platform, and there is a danger that the machine loses its balance. Operate the machine slowly over this point.
- When you load or unload the machine on an embankment or platform, make sure that it has sufficient width, strength, and grade.
- When you swing the upper structure on the loading platform, lower the work equipment, retract it, and do the operation slowly because the footing is not stable.
- Be sure to fold the mirrors and stow the radio antenna.
- For the machines with cab, be sure to lock the door after the machine is loaded. The door can open during transportation.
- When it is necessary to remove the handrails and steps, be careful not to lose the removed handrails and steps.
  Install the removed handrails and steps securely.
- Be sure to remove the GNSS radio device antenna.
- Make sure that the control functions such as machine control, 3D boundary, and auto swing are set to OFF (manual mode).
  If you operate the machine while the control function is set to ON, the machine can move unexpectedly, and it is dangerous.

Towing and being Towed

Precautions for Towing and Being Towed

Always use the correct towing equipment and towing method. Any mistake in the selection of the wire rope or drawbar or the method of towing a disabled machine and being towed may lead to serious personal injury or death.

- Always confirm that the wire rope or drawbar used for towing has ample strength for the weight of the machine being towed.
- Never use the wire rope which has cut strands (A), reduced diameter (B), or kinks (C). There is a danger that the rope may break during the towing operation.
- Always wear leather gloves when handling the wire rope.
- Never tow a machine on a slope.
- During the towing operation, never stand between the towing machine and the machine being towed.

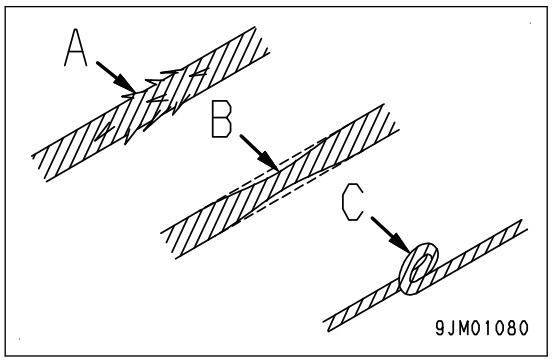

Lifting Operation by Using Bucket with Hook

Precautions for Lifting Operations

There is danger that a lifted load falls down or the machine falls over. It can cause personal injury or death. Obey the items that follow.

- Do not do the lifting work on slopes, soft ground, or other areas where the machine is not stable.
- Use wire rope that agrees with the specified standard.
- Do not lift the load that exceeds the specified lifting load. It can cause a dangerous accident such as fall-off of the machine.
- Make the signals to be used and give a signalman at the place.
- Do not let a worker go in the area where there is danger of contact with a lifted load or the danger from a falling load.
- It is dangerous if a lifted load hits workers or structures. When you do the swing or work equipment operation, make sure that the area around the machine is safe.
- Do not start, swing, or stop the machine suddenly. The lifted load possibly swings, and it is dangerous.
- Do not use the work equipment or swing to pull the load. There is danger that the hook can have damage and the load can come off. The reaction at this time can cause personal injury.
- Do not go away from the operator seat while the load is lifted.

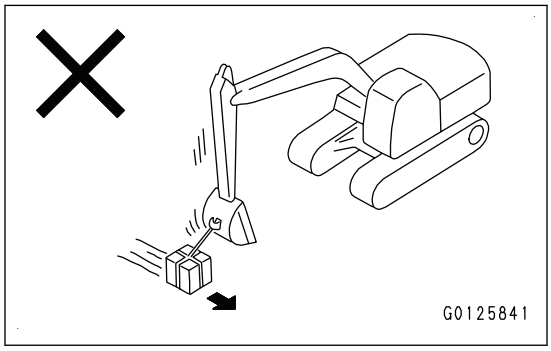

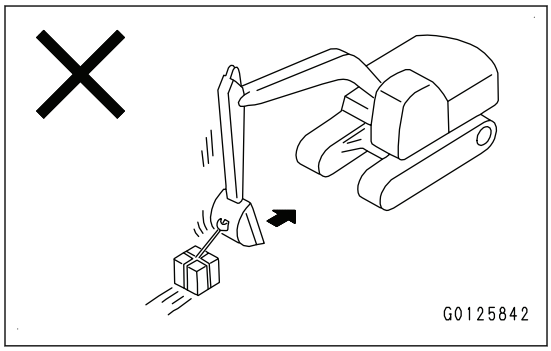

Precautions for Maintenance

Precautions Before Starting Inspection and Maintenance

Display Warning Tag During Inspection and Maintenance

During the inspection and maintenance, show “DANGER! Do NOT operate!” warning tag.

“DANGER! Do NOT operate!” warning tag shows that the machine is during the inspection and maintenance.

Do not ignore the warning tag and do not operate the machine. There is a danger of personal injury or death such that you are caught in the machine. Do not start the engine. Do not touch the levers.

Show warning signs around the machine as necessary.

Warning tag part No. 421-93-82910

When not using this warning tag, keep it in the toolbox. If there is no toolbox, keep it in the pocket for Operation and Maintenance Manual

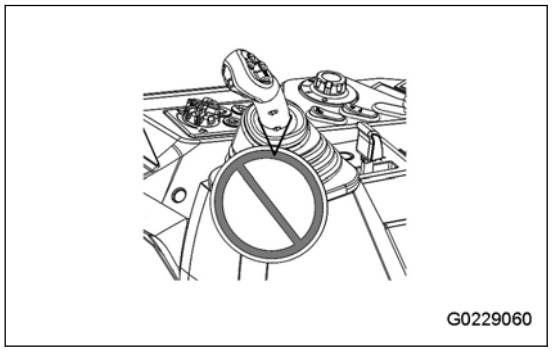

Keep Work Place Clean and Tidy

- Do not leave hammers or other tools lying around in the work place. Wipe up all grease, oil, or other substances that will cause you to slip. Always keep the work place clean the tidy to enable you to perform operations safely. If the work place is not kept clean and tidy, there is the danger that you will trip, slip, or fall over and injure yourself.
- When cleaning the ceiling window which is made of organic glass (polycarbonate), use tap water and avoid use of organic solvents for cleaning. An organic solvent like benzene, toluene or methanol can invite a chemical reaction like dissolution and decomposition on the window glass, deteriorating polycarbonate in use.

Select Suitable Place for Inspection and Maintenance

- Stop the machine on a firm, level ground.
- Select a place where there is no hazard of landslides, falling rocks, or flooding.

Only Authorized Personnel

As long as maintenance of the machine is continued, do not allow unauthorized person to come near the workplace. They might get unexpected personal injury from, for instance, touching machine. Unauthorized persons must not come close, except for necessary workers. If necessary, employ a guard.

Appoint Leader When Working with Others

When repairing the machine or when removing and installing the work equipment, appoint a leader and follow his/hers instructions during the operation in order to prevent personal injuries caused by being caught or pinched.

Stop Engine Before You Inspect or Do Maintenance

If you are caught or pinched in the device during the operation, or exposed to high-temperature or high-pressure liquids, it is dangerous and can cause personal injury or death. Obey the items that follow.

- Be sure to lower the work equipment to the ground, and stop the engine before inspection and maintenance.

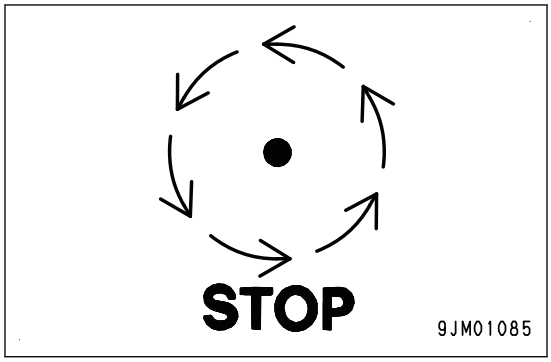

- After the engine is stopped (work equipment is lowered to the ground), turn the starting switch to the ACC or ON position, log on to the system, and operate the operating part (g) of the lock lever (1) to the FREE position (F). Operate the work equipment control lever back and forth, right and left 2 to 3 times fully to release the remaining pressure in the hydraulic circuit. Operate the operating part (g) of the lock lever (1) to the LOCK position (L).

  After the remaining pressure in the hydraulic circuit is released, turn the starting switch to the OFF position.

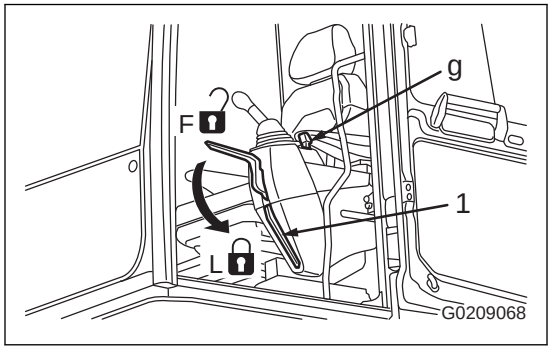

- Make sure that the system operating lamp is off and the main power is not supplied.
- Put chocks on the tracks to prevent unexpected machine movement.

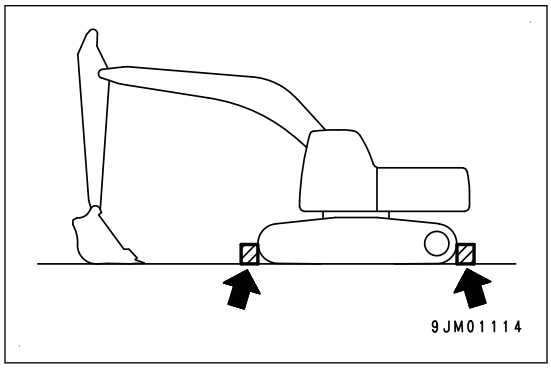

Two Workers are Required for the Maintenance When the Engine is in Operation

To prevent accidents, do not do maintenance while the engine is in operation. If maintenance is necessary with the engine in operation, obey the items that follow.

- One worker must sit on the operator seat. All workers must keep communication with each other to stop the engine immediately.
  Do not go away from the operator seat during the maintenance.
- Keep your body or objects away from rotating parts such as fans and belts.
- Do not let objects fall into rotating parts such as fans and belts. There is a danger that it hits the rotating parts and bounces back.
- Stop after-treatment system regeneration during maintenance. If automatic active regeneration of after-treatment system starts during maintenance work, the temperature around the after-treatment system rises.

- Lower the work equipment to the ground, and operate the operating part (g) of lock lever (1) to set it to the LOCK position (L) not to let the work equipment move.
- Do not touch the control levers (and pedals). When it is necessary to operate the control levers or pedals, be sure to give a signal to other workers to evacuate them to a safe area.

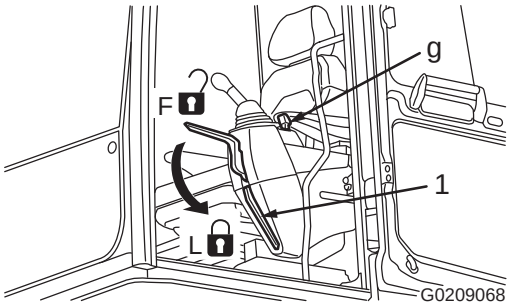

Precautions When Installing, Removing, or Storing Attachments

- Appoint a leader before starting removal or installation operations for attachments.
- Place attachments that have been removed from the machine in a stable condition so that they do not fall. And take steps to prevent unauthorized persons from entering the storage area.

Precautions for Working at High Places

When working at high places, use a step ladder or other stand to ensure that the work can be performed safely.

There is a danger falling from high place that can lead to serious personal injury or death.

Precautions When You Work on Machine

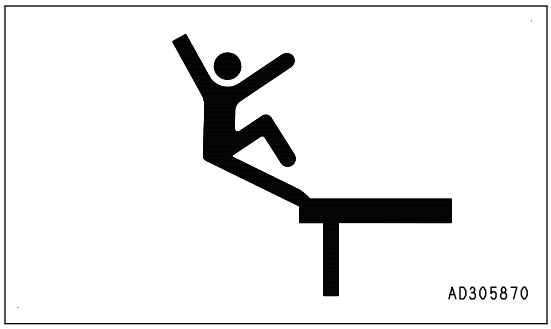

- When you do the maintenance on the machine, obey the items that follow not to fall down from the machine.
  - Always clean the footing.
  - Do not spill oil or grease.
  - Organize the tools.
  - When you walk, be careful of the footing.
  - Remove the mud and grease on your shoes.
- Do not jump from the machine.
  Keep an eye on the machine. Support yourself at three-point contact with handrails and steps.
  Three-point contact is to support yourself with the two feet and one hand, or two hands and one foot.
- Do not stand on the areas where there are no non-slip pads.
- To prevent personal injury caused by the slip or fall-off from the machine, be sure to correctly attach the personal fall-arrest equipment to the anchor points (1) and (2) for tie-off.
  Use it when you do the work on the step (3) and on the position higher than that as a foothold.

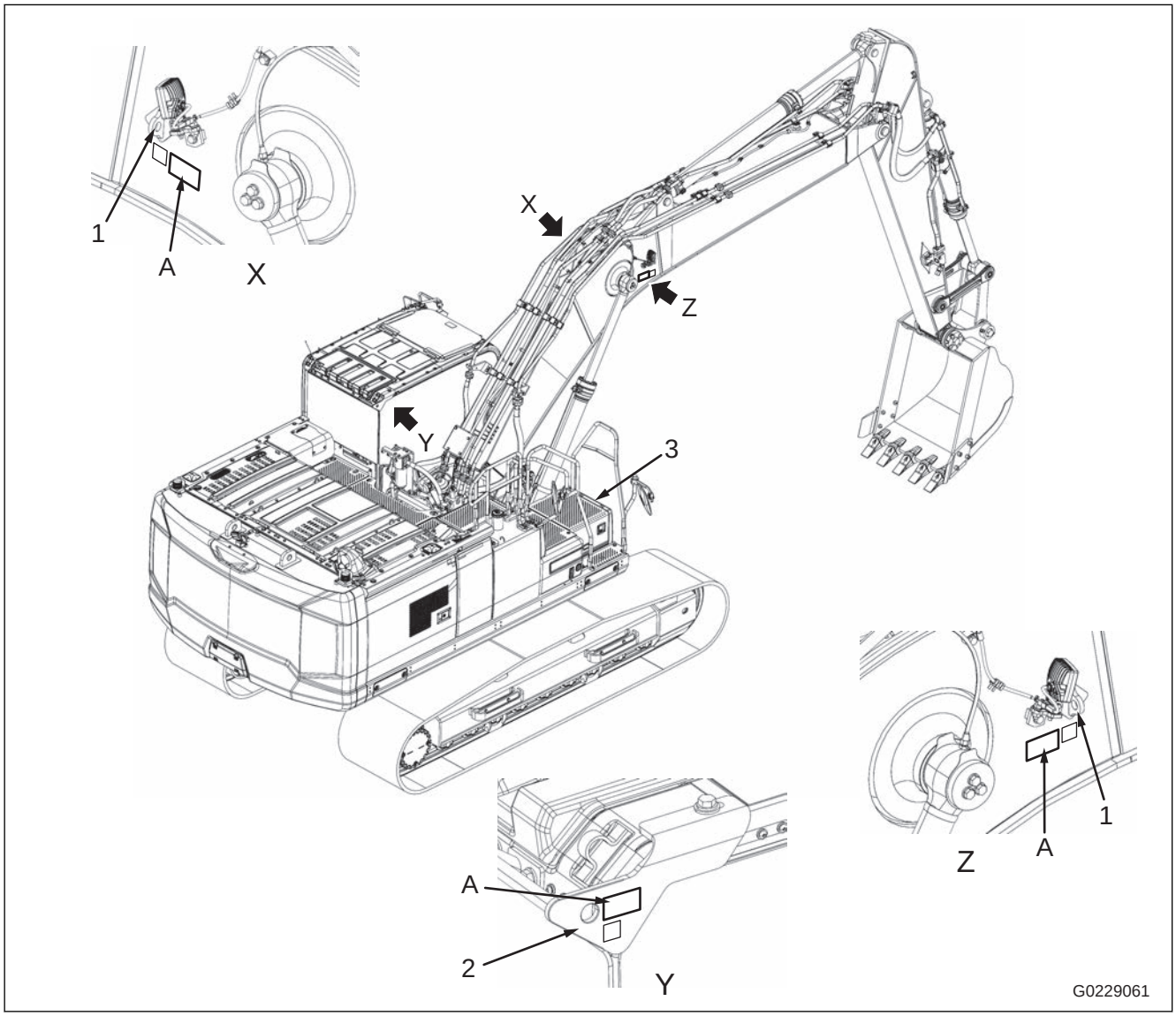

- The safety label (A) as shown in the figure is attached on the anchor point for tie-off.

- If there is a possibility that the personal fall-arrest equipment is not attached correctly as follows, you must always use additional equipment such as a sling or a shackle to connect correctly to the anchor point for tie-off.
  - If the hook or retaining device cannot be correctly engaged
  - If loads that bend the hook are applied
  - If loads to the retaining device are applied
  - If other loads that can cause damage to the hook or retaining device are applied

Examples of incorrect use

- The personal fall-arrest equipment touches a corner of the parts, and load is applied.

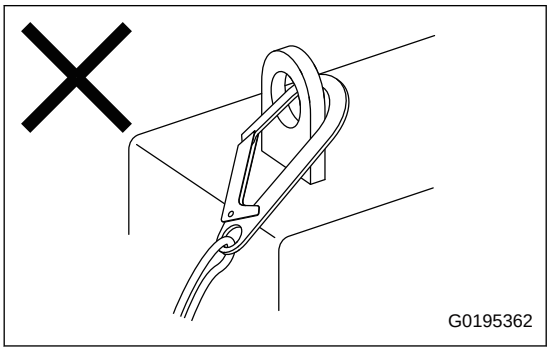

- The personal fall-arrest equipment is too small against the thickness of the anchor point for tie-off.

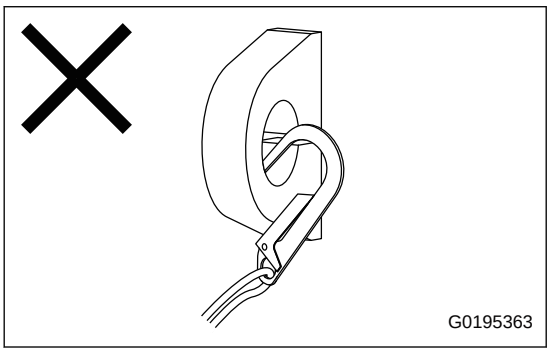

- The hook of the personal fall-arrest equipment does not come into the anchor point for tie-off.

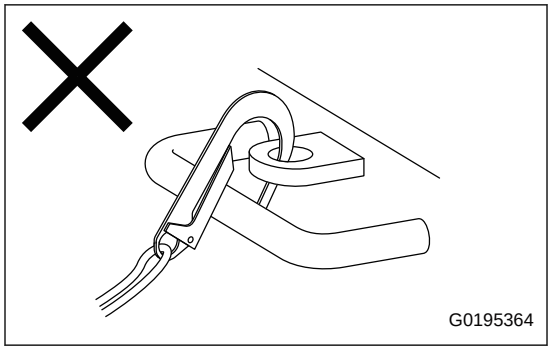

Examples of correct connection when additional equipment is used

- When you use a sling

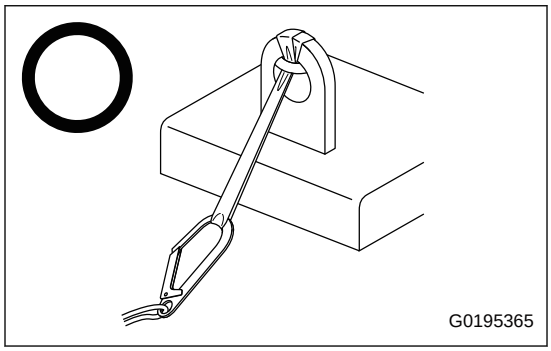

- When you use a shackle

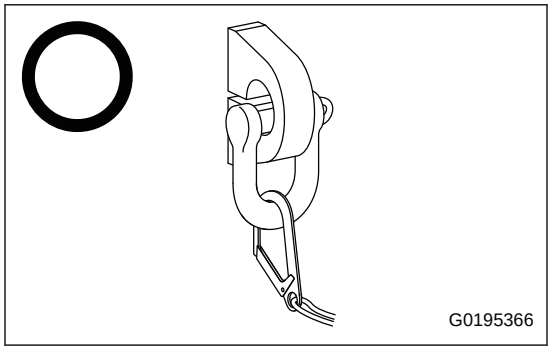

- Do not use the anchor point for tie-off if the tie-off point is worn or have damage. Immediately consult your Komatsu distributor for the inspection and repair.
- The anchor points for tie-off installed to the work equipment are designed to be used in the arm IN and bucket CURL posture.

Precautions When You Work Under Machine or Work Equipment

Machine or work equipment may fall, and it is dangerous that serious personal injury or death may occur. Always observe the following.

- Do not perform inspection and maintenance under the work equipment which is not lowered to the ground. Always lower the work equipment to the ground when performing inspection and maintenance.
- Make sure the hoists or hydraulic jacks you use are in good condition and strong enough to handle the weight of the component. Never use hydraulic jacks at places where the machine is damaged, bent, or twisted. Never use if the element wire of wire rope is frayed, twisted or pinched. Never use bent or distorted hooks.
- It is extremely dangerous to work under the machine if the track shoes are lifted off the ground and the machine is supported only with the work equipment. If any of the control levers is touched by accident, or there is damage occurring to the hydraulic piping, the work equipment or the machine will suddenly fall. Never work under the work equipment or the machine.
- If it is necessary to raise the work equipment or the machine and then go under it to perform inspection or maintenance, support the work equipment and machine securely with blocks and stands strong enough to support the weight of the work equipment and machine.
  If the work equipment and machine are not supported, they may come down and it may cause serious personal injury or death.
- Never use concrete blocks for supports. Concrete blocks may break under even light loads.

Use Proper Tools

Use the tools suited to the task and use them correctly. Using damaged, deformed, or low quality tools, or making improper use of the tools may cause serious personal injury or death.

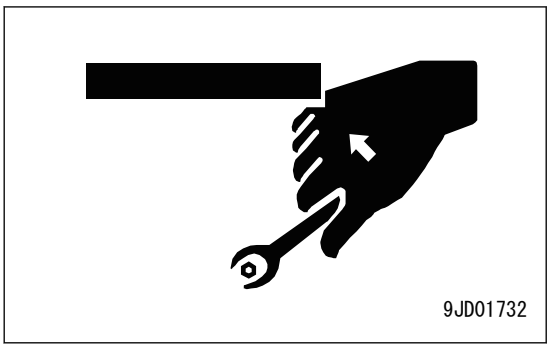

Precautions for Check and Maintenance

Turn Battery Disconnect Switch to OFF Position

In the cases that follow, turn the starting switch to the OFF position, make sure that the system operating lamp is off. And then, set the battery disconnect switch to the OFF position, and remove the switch key or lock it.

There is a danger that causes personal injury or death by electric shock if you examine or handle the battery while the battery disconnect switch is not set to the OFF position.

- When you store the machine for a long time (a month or longer)
- When you repair the electrical system
- When you do the electric welding
- When you handle the battery
- When you replace the fuse or such
- When the work is completed (when the operator identification setting is OFF or the operator ID certification setting is OFF)

Precautions for Welding

Welding operations must always be performed by a qualified welder and in a place equipped with proper equipment. There is a hazard of gas, fire, or electric shock when performing welding, so never allow any unqualified person to perform welding.

Handle Battery

To check and handle the battery, turn the starting switch to the OFF position, and make sure that the system operating lamp is not lit. And then, set the battery disconnect switch to the OFF position, and remove the switch key.

Danger of Battery Exploding

The battery releases flammable hydrogen gas.If you do not handle the battery correctly, it can cause personal injury, explosion, or fire. Be sure to obey the items that follow:

- Do not use a direct air blow or dry cloth to clean the battery. Use a wet cloth to prevent fire or explosion from static electricity.
- Do not let open flame near the battery.
- Do not smoke near the battery.

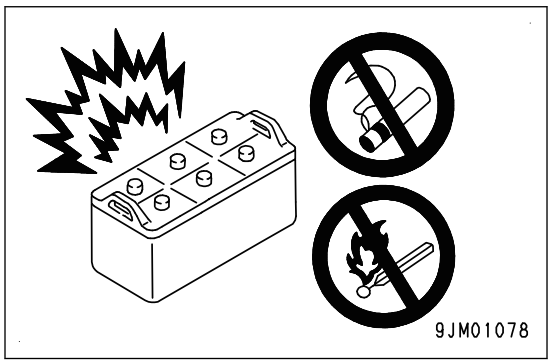

For the machine with liquid stopper type battery, obey the precautions that follow.

- If the electrolyte level is below the minimum level line, do not use or charge the battery. There is a danger of explosion.
  Examine the battery electrolyte level at the specified interval. Add purified water (such as a commercial battery fluid) to the maximum level line.
- If you use a battery charger for charging, obey the precautions that follow:

  Before charging:

  - Remove the battery from the machine and move it to a well-ventilated area.
  - Remove the battery cap to make it easier to diffuse hydrogen gas out of the battery.

- Make sure that the battery electrolyte level is between the middle of the two electrolyte level lines and the maximum level line.

During charging:

Do not look into the battery electrolyte.

After charging:

Examine the battery electrolyte level again and tighten the battery cap fully.

For the machine with Komatsu maintenance-free battery, obey the precautions that follow.

- See the display of the indicator, and obey the instruction. For how to read the indicator, see Maintenance, “How to Examine Battery and Indicator of Komatsu Maintenance-Free Battery (4-69)”.
- If you use a battery charger for charging, remove the battery from the machine, move it to a well-ventilated area, and then charge the battery.

Risk Caused by Dilute Sulfate

The battery electrolyte contains dilute sulfuric acid. If you do not handle it correctly, it can cause personal injury, explosion, or fire. Obey the items that follow.

- When you handle the battery, wear the protective eyeglasses and rubber gloves.
- If the battery electrolyte gets into your eyes, immediately clean your eyes with a large quantity of clean water, and consult a doctor for treatment.
- If the battery electrolyte gets on your clothes or skin, immediately clean it fully with a large quantity of clean water.

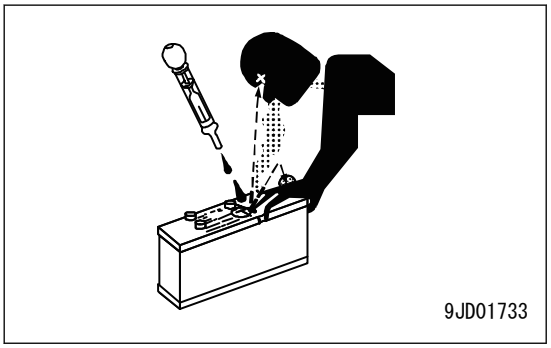

Danger of Sparks

Sparks are made and can cause fire. Obey the items that follow.

- Do not allow metal object like a tool to contact between the terminals of the battery. Do not let the tools stay.
- When you remove the battery terminals, turn the starting switch to the OFF position, and make sure that the system operating lamp is not lit. And then turn the battery disconnect switch key to the OFF position, and remove the key.
  Be sure to remove the ground side (negative (-) terminal side) of the battery terminal first. When you install the battery, install the positive (+) terminal first, and then install the ground side.
- Install the battery terminals securely.
- Install the battery to the specified position securely.

Precautions When Using Hammer

When using a hammer, pins may come out or metal particles may be scattered. It is dangerous and may cause serious personal injury or death. Always observe the following.

- When hitting pins or bucket teeth, broken pieces may be scattered, and it may cause personal injury to the people in the surrounding area. Always check that there is no one in the surrounding area.
- If hard metal parts such as pins, bucket teeth, cutting edges, or bearings are hit with a hammer, pieces might be scattered, and it may cause serious personal injury or death. Always wear protective eyeglasses and gloves.
- If the pin is hit with strong force, it may come out, and injure people in the surrounding area. Do not allow anyone to enter the surrounding area.

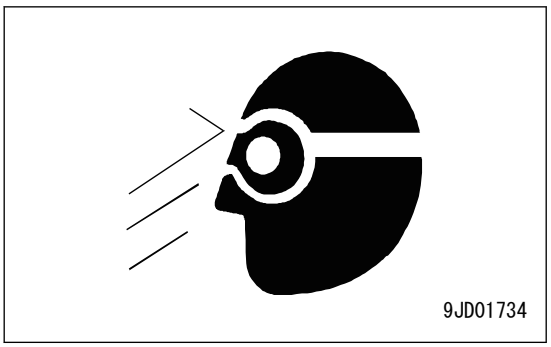

Precautions for High-Temperature Coolant

To prevent burn injury caused by the spurting of hot water or steam when you do inspection and drain the coolant, make sure that the surface temperature of the expansion tank is sufficiently low to touch by bare hands. Then, loosen the cap slowly, release the internal pressure from the expansion tank, and remove the cap.

Precautions for High-Temperature Oil

To prevent burns from hot oil spurting out or from touching high-temperature parts when checking or draining the oil, wait for the oil to cool down to a temperature where the cap or plug can be touched by hand. Then, loosen the cap or plug slowly to release the internal pressure and remove the cap or plug.

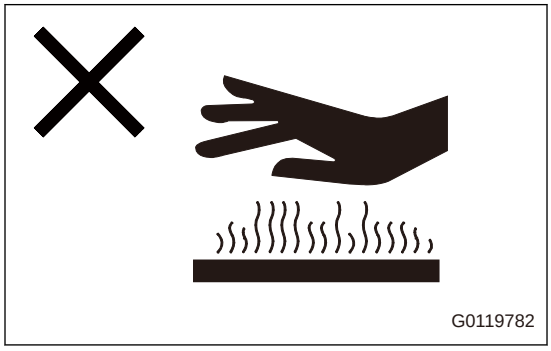

Precautions for High-Temperature Parts

To prevent burns from touching high-temperature parts, when checking or performing maintenance after stopping engine, check the parts have been cooled down to touch with bare hand before checking or maintenance.

Precautions for High-Pressure Oil

Internal pressure is constantly applied to the hydraulic system. Internal pressure is applied to the fuel pipes while the engine is in operation and immediately after it is stopped. When you do inspection and replacement of pipes and hoses, if you do not make sure that the pressure of the circuit is released, there is a danger that personal injury or death occurs. Obey the items that follow.

- Do not do inspection or replacement work when pressure is applied.
  Release the pressure. For details, see “How to Release Internal Pressure in Hydraulic Circuit (4-85)”.
- If there is oil leakage from the pipes or hoses, the pipes, hoses and around them are wet. Examine the pipes for cracks, and examine the hoses for cracks and swelling.
  Put on the protective equipment such as protective eyeglasses and gloves during inspection.
- If high-pressurized oil leakage occurs through a small hole, it can cause damage on the skin or cause loss of sight if it hits the skin or eyes directly. If high-pressurized oil causes skin or eye injury, clean it in clean water, and consult a doctor immediately.

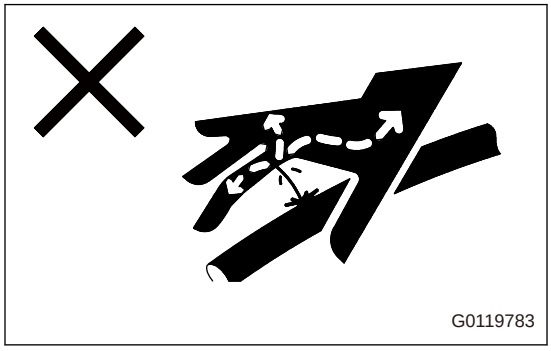

Precautions for High-Pressure Fuel

While the engine is running, high-pressure is generated in the engine fuel piping. If you try to disassemble the piping before the internal pressure is released, serious personal injury or death can result. When performing inspection or maintenance of the fuel piping system, stop the engine and wait for at least 30 seconds to allow the internal pressure to go down before starting the work.

Handle High-Pressure Hoses and Piping

If oil or fuel leaks from the high-pressure hoses or pipes, there is a danger of personal injury or death by fire or malfunction.If the mounting part of hoses or pipes is loose, or leakage is found, stop the work immediately, and tighten the loose part to the specified torque.

If damage is found in hoses or pipes, consult your Komatsu distributor.

If problems are found as follows, replace the hose.

- When the hose or hose fitting has damage
- When the coating is worn or cut, or when the reinforcement of wire is exposed
- When a part of coating is expanded
- When movable part has signs of “distortion” and “crushing”
- When the coating has foreign materials in it

Precautions for High Voltage

When the engine is running and immediately after it is stopped, high voltage is generated inside the engine controller and the engine injector, and there is danger of electric shock. Never touch the inside of the engine controller or the injector part of the engine. If it is necessary to touch the inside of the engine controller or the injector part of the engine, consult your Komatsu distributor.

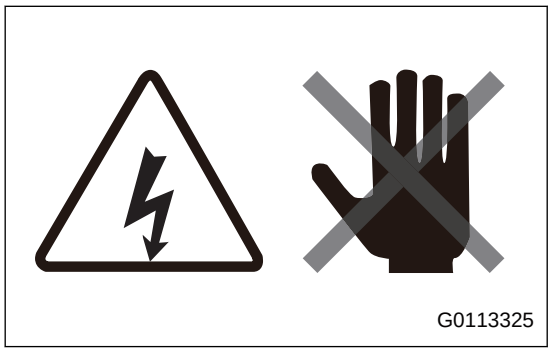

Precautions for Noise

When performing maintenance of the engine and you are exposed to noise for long periods of time, wear ear covers or ear plugs while working.

If the noise is too loud, it may cause temporary or permanent hearing problems.

Precautions for High-Pressure Grease When Adjusting Track Tension

- Grease is pumped into the track tension adjustment system under high pressure. If the specified procedure for maintenance is not followed when making adjustment, grease drain plug (1) may fly out and cause serious injury or death or property damage.
- When loosening grease drain plug (1) to loosen the track tension, never loosen it more than 1 turn. Loosen the grease drain plug slowly.
- Never put your face, hands, feet, or any other part of your body close to grease drain plug (1).

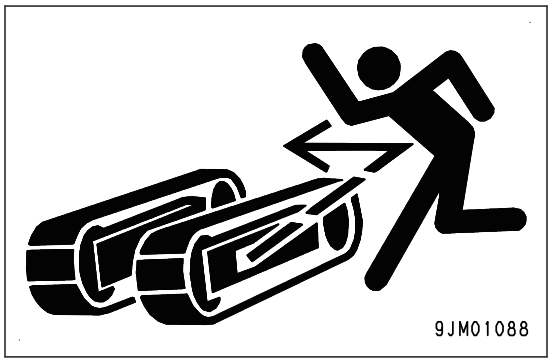

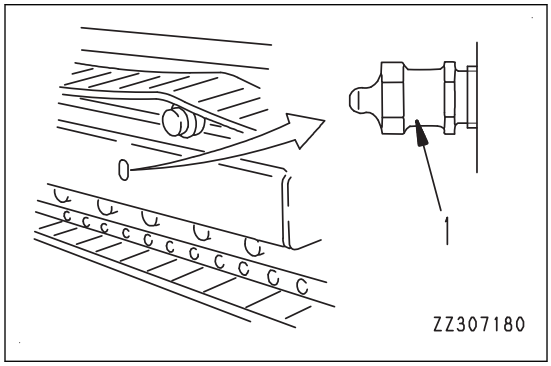

Do Not Disassemble Idler Cushion

Do not disassemble the idler cushion.

A powerful spring (recoil spring) is set in the idler cushion that operates to reduce the impact on the idler. If it is disassembled by mistake, the spring can jump out and it can cause personal injury or death. If it is necessary to disassemble it, consult your Komatsu distributor.

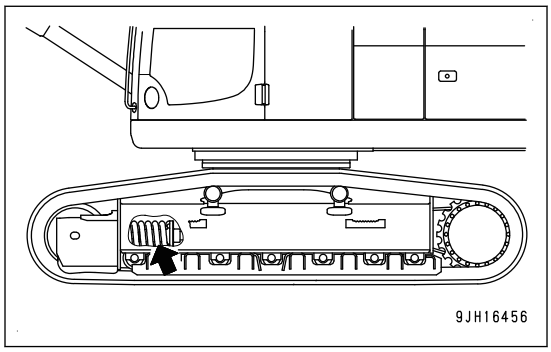

Handle Accumulator and Gas Spring

This machine is equipped with an accumulator. Even after the engine stops, if the work equipment control lever is operated after stop of the engine in the direction to lower the work equipment, the work equipment goes down with its own weight.

After stopping the engine, set the lock lever to LOCK position.

The accumulator and gas spring are charged with high-pressure nitrogen gas. If the accumulator is handled mistakenly, it may cause an explosion. It is dangerous and may cause serious personal injury or death. Always observe the following.

- Do not disassemble.
- Do not bring it near flame or dispose of it in fire.
- Do not make holes in it, weld it, nor use a cutting torch.
- Do not hit or roll the accumulator, or subject it to any impact.
- When disposing of the accumulator, the gas must be released. Ask your Komatsu distributor to perform this work.

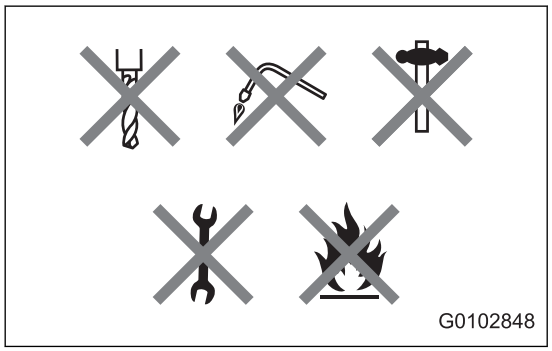

Precautions for Compressed Air

- When performing cleaning with compressed air, there is a hazard of serious personal injury or death caused by flying dust or particles.
- When using compressed air to clean the filter element or radiator, wear protective eyeglasses, anti-dust mask, gloves, and other protective equipment.

Precautions for Air Conditioner Maintenance

Do not loosen the parts of the refrigerant system of air conditioner.

If the refrigerant of air conditioner gets in your eyes, it could cause loss of sight. And if it gets on your skin, it causes frostbite.

Handle Coolant

The coolant is poisonous. Be careful not to let the coolant get in your eyes or on your skin.

If coolant gets on you, immediately clean the part with a large quantity of clean water and consult a doctor for treatment.

Precautions When You Discard Waste Materials

To prevent environmental pollution, be careful of the disposal of waste materials.

- Be sure to put waste fluid in the containers such as cans or tanks. Do not drain it directly on the ground or pour it into the sewage system, rivers, seas, or lakes.
- When you dispose of the poisonous objects such as oil, fuel, coolant, solvent, filters, batteries, and DEF, obey the applicable laws and regulations.
- When you dispose of the air conditioner, dispose of fluorocarbons in accordance with the applicable laws and regulations.

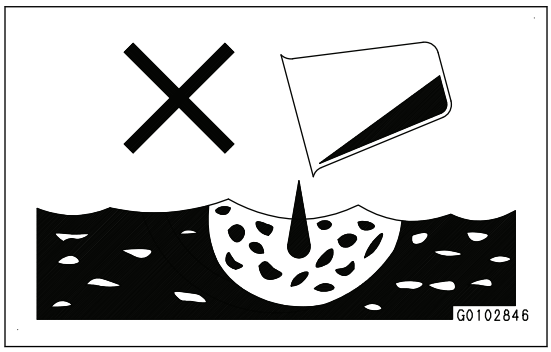

If rubber or plastics are burned, poisonous gas that causes problems to the human body can come out.

- When you dispose of rubber or plastic parts (hoses, cables, and wiring harnesses), obey the local regulations on industrial waste.
- If you have a question about the disposal of waste materials, consult your Komatsu distributor.

Method for Selecting Window Washer Fluid

Use an ethyl alcohol base washer liquid.

Methyl alcohol base washer liquid may irritate your eyes, so do not use it.

Periodic Inspection of Defined Life Parts

- To use the machine safely for a long period, be sure to periodically inspect the defined life parts that have an especially close relation to safety, such as hoses and the seat belt. If an abnormality is found, replace it immediately.
- The material of these components naturally changes over time, and repeated use causes deterioration, wear, and fatigue. As a result, there is a hazard that these components can fail and cause serious personal injury or death. It is not easy to judge the remaining life of these components but inspect them as much as possible before work and at the regular maintenance.
- Replace or repair the defined life parts if a defect is found by the check.

Precautions for DEF

General Character and Precautions for Handling

DEF is a colorless transparent 32.5% aqueous urea solution. Urea as main constituent is a material which is used for cosmetics, medical and pharmaceutical products, and fertilizer, etc.

The situations that follow require immediate remedy shown below.

- If it gets on your skin, it can cause inflammation. Immediately take the contaminated clothes or shoes off, and clean your skin with water. In addition, use a soap to clean it fully. If your skin becomes irritated or if you have pain, consult a doctor for treatment immediately.
- If swallowed, do not try to vomit it. Fully rinse your mouth with water and consult a doctor for treatment immediately.
- If it gets into your eyes, immediately clean your eyes with water, and consult a doctor for treatment immediately.
- If there is a danger that DEF can spout, put on protective eyeglasses. Put on rubber gloves when you work with DEF.

Precautions When You Add

Do not put fluid other than DEF in the DEF tank. If diesel fuel or gasoline is added into the tank, it can cause a fire. Some fluids or agents added can cause poisonous gas.

When you open the DEF tank cap on the machine, poisonous ammonia gas can come out. Keep your face away from the filler port when you open it or while you add DEF.

Precautions for Storage

If DEF temperature becomes high, poisonous ammonia gas can occur. Fully seal up its container for storage. Open the container in a well-ventilated area.

For DEF storage, prevent direct sunlight and use the original container. Do not change the container with other one. If DEF is stored in an iron or aluminum container, a chemical reaction can cause poisonous gas and corrosive material.

Precautions for Fire Hazard and Leakage

DEF is non-flammable; but, in the case of a fire it can cause ammonia gas.

If DEF is spilled, immediately wipe and clean the area with water. If spilled DEF is not cleaned up, a chemical reaction can cause poisonous gas and corrosive material.

Other Precautions

When you dispose of DEF, handle it as industrial waste. The DEF container is also industrial waste. It must be handled in the same manner.

Do not use an iron or aluminum container for disposal of DEF. If you use it, a chemical reaction can cause poisonous gas and corrosive material. When you dispose of DEF, use a container made of resin (PP, PE) or stainless steel.

Do not touch the fluid discharged from the urea SCR. This fluid becomes acid by the influence of sulphur content in the fuel or of the built-in oxidation catalyzer. If it gets on your skin, fully clean it with water.

White powder (crystallized urea) possibly attaches to the exhaust pipe outlet of the aftertreatment devices. When it is necessary to wipe off the attached materials, dispose of the crystallized urea and the used cloth as industrial waste.

You must not move or make a modification to the exhaust gas aftertreatment devices. Not only it is a violation of laws, but also it can cause dangerous damage to the environment by the discharged poisonous gas.

Operation

⚠ WARNING

Please read and make sure that you understand the SAFETY section before reading this section.

General View

Machine Equipment Name

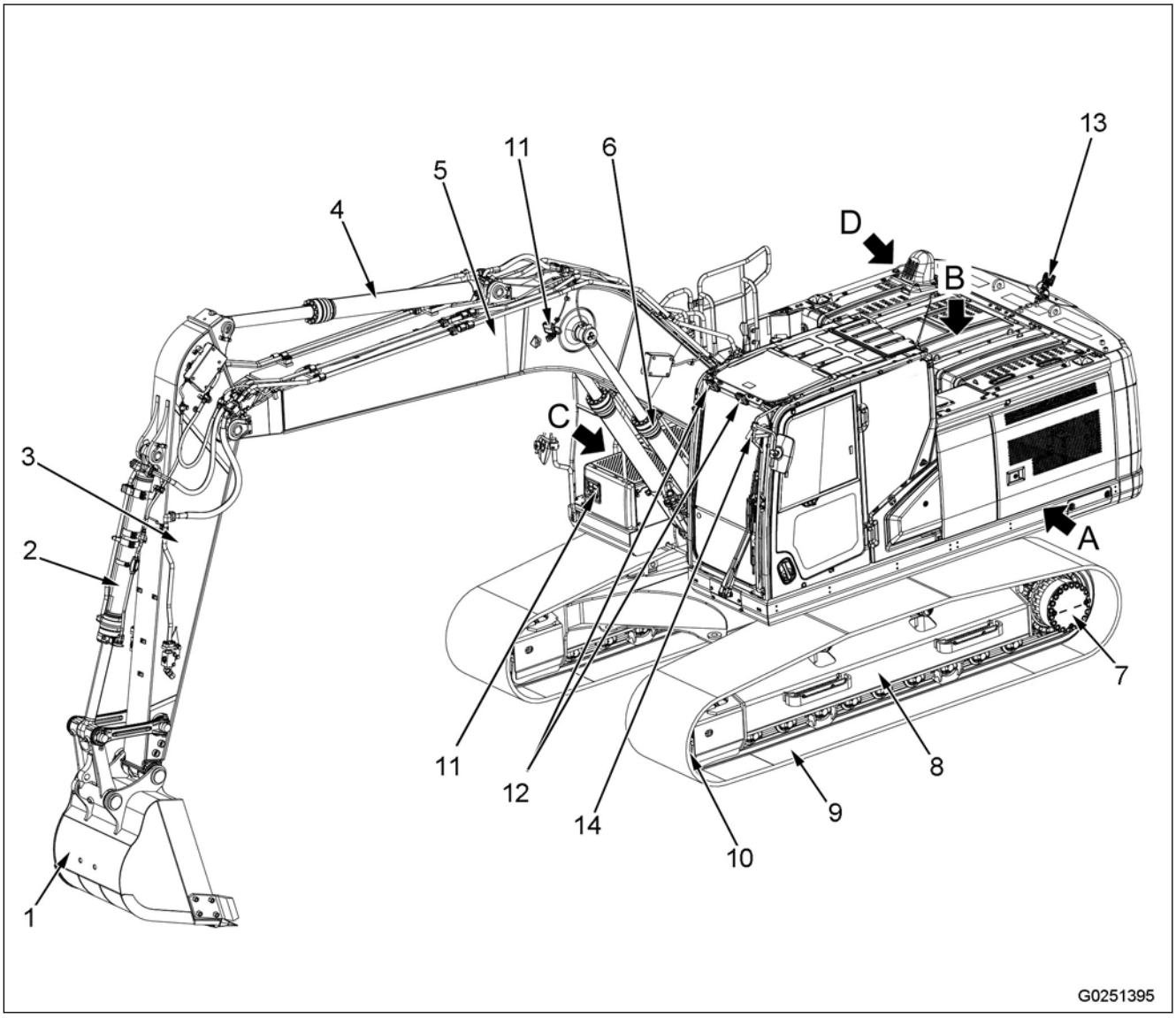

(1) Bucket
(2) Bucket cylinder
(3) Arm
(4) Arm cylinder
(5) Boom
(6) Boom cylinder
(7) Sprocket
(8) Track frame
(9) Track
(10) Idler
(11) Working lamp (boom, deck)
(12) Working lamp (on front top of cab)
(13) Additional working lamp (on counterweight) (if equipped)
(14) KomVision camera

Details of Parts A, B, C, and D

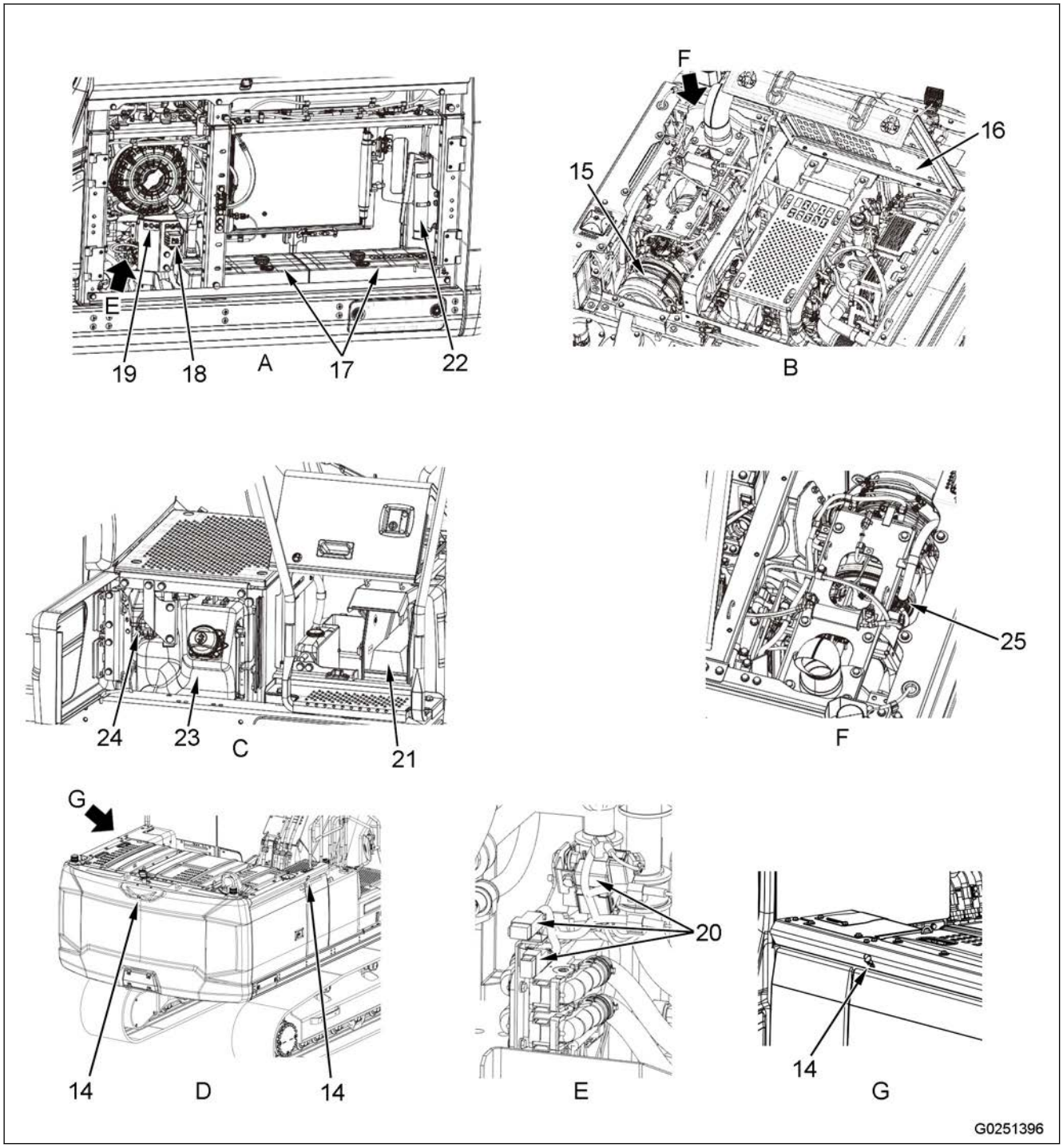

(15) KDPF and SCR assembly
(16) Engine hood
(17) Battery
(18) Battery disconnect switch
(19) System operating lamp
(20) Fusible link
(21) Tool box
(22) Grease pump holder
(23) DEF tank
(24) DEF pump
(25) DEF injector

Cab Equipment Name

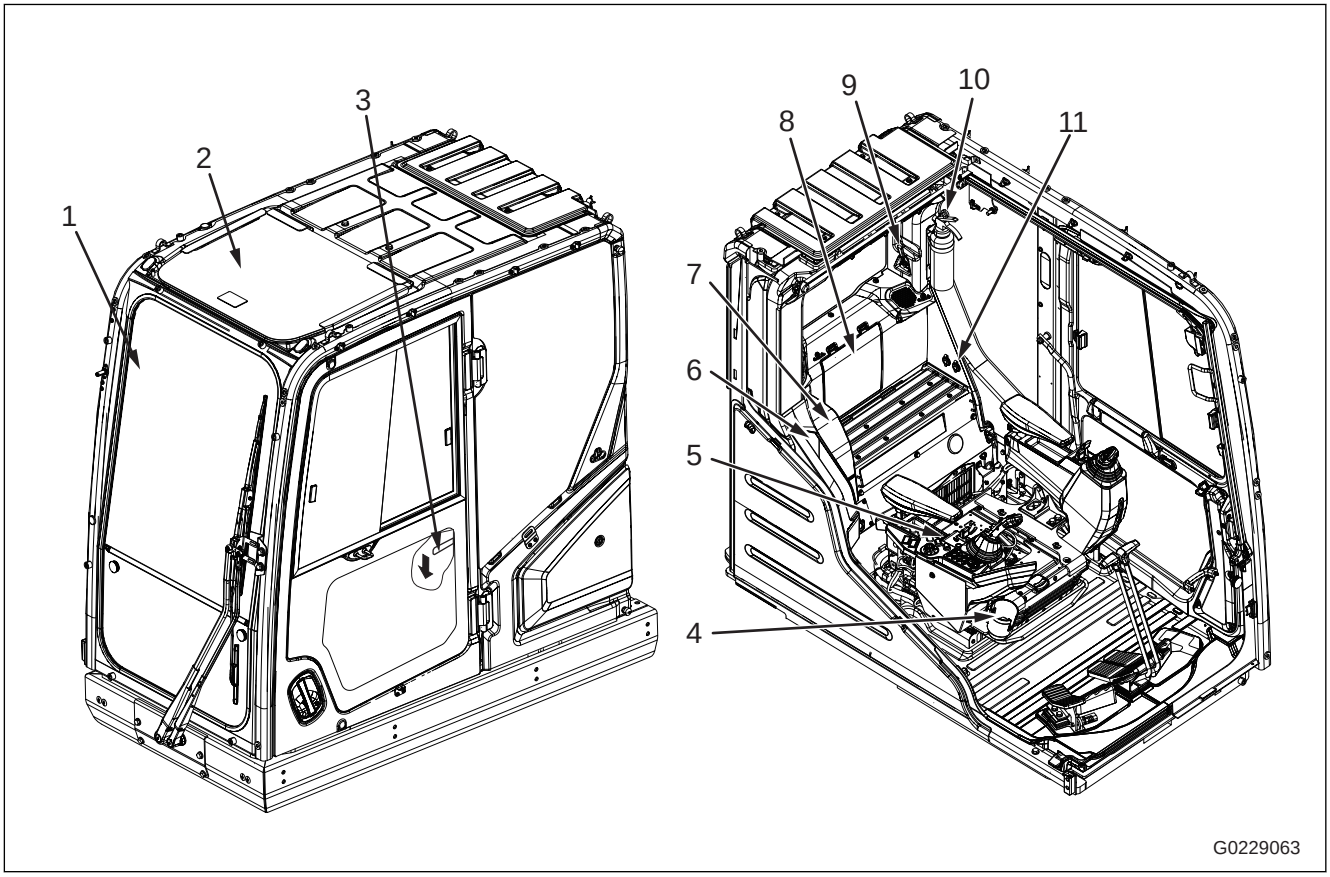

(1) Front window
(2) Ceiling window
(3) Door lock release lever
(4) Cup holder
(5) USB terminal for charge
(6) Magazine box
(7) Drink box
(8) Fuse
(9) Emergency escape hammer
(10) Fire extinguisher (if equipped)
(11) 12 V power supply outlet

Controls and Gauges Names

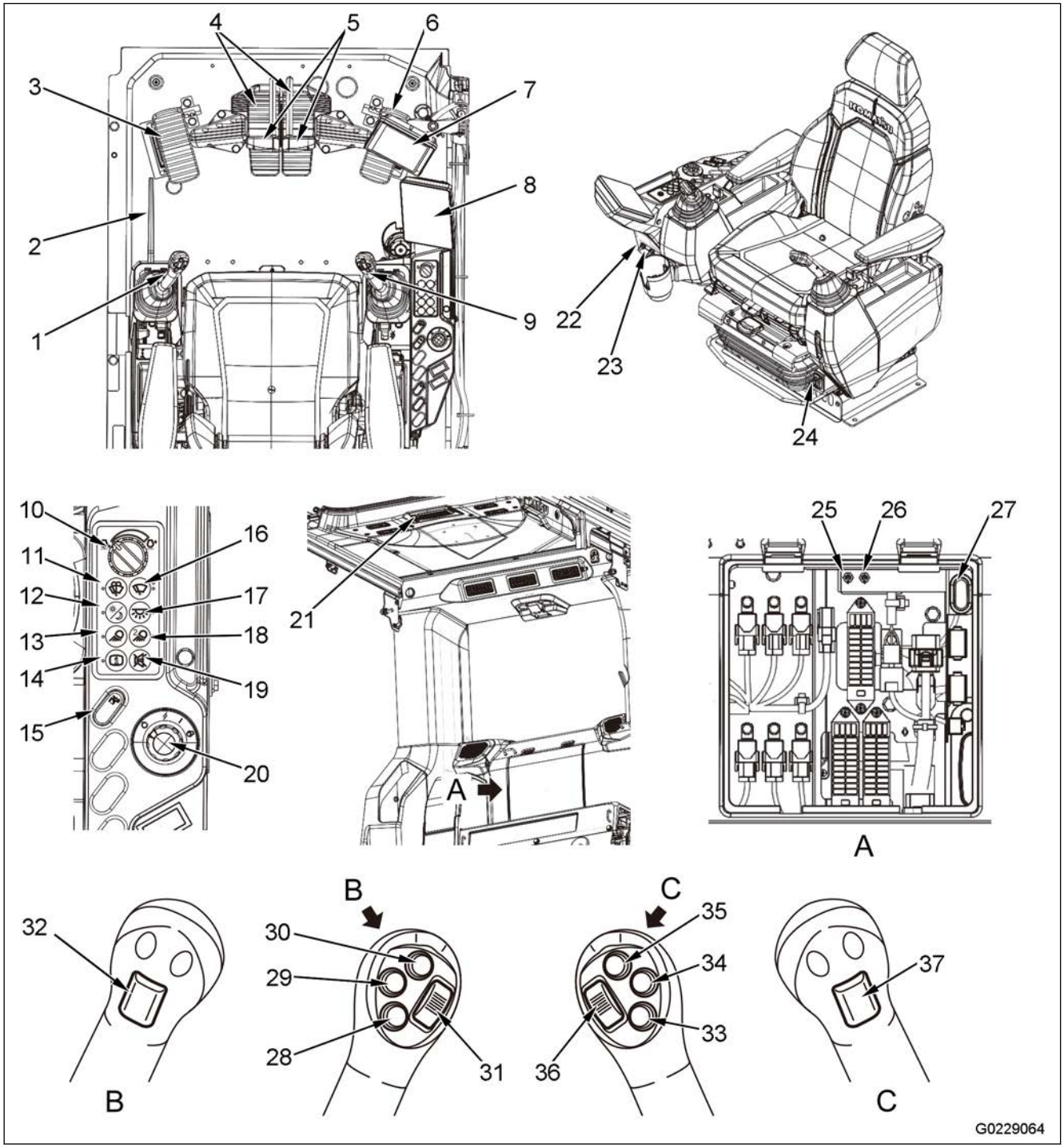

(1) L.H. work equipment control lever
(2) Lock lever
(3) Attachment control pedal (if equipped)
(4) Travel pedal
(5) Travel lever
(6) Attachment control pedal (if equipped)
(7) ICT monitor (if equipped)
(8) Machine monitor
(9) R.H. work equipment control lever
(10) Fuel control dial
(11) Window washer switch
(12) Monitor brightness selector switch
(13) Lamp switch
(14) Information switch
(15) Swing lock switch
(16) Wiper switch
(17) Room lamp remote switch
(18) Additional lamp switch (if equipped)

(19) Mute switch
(20) Starting switch
(21) Room lamp switch
(22) Boom secondary drive switch
(23) Swing secondary drive switch
(24) Engine shutdown secondary switch
(25) Lock lever automatic lock cancel switch
(26) Swing parking brake cancel switch
(27) Limp mode switch
(28) Left work equipment control lever switch 1 (temporary control cancel)
(29) Left work equipment control lever switch 2
(30) Left work equipment control lever switch 3
(31) Left work equipment control lever wheel
(32) Left work equipment control lever switch 4
(33) Right work equipment control lever switch 1 (horn)
(34) Right work equipment control lever switch 2
(35) Right work equipment control lever switch 3
(36) Right work equipment control lever wheel
(37) Right work equipment control lever switch 4

Names of Machine Monitor Equipment

(1) Object avoidance icon
(2) Machine stop control icon
(3) Object avoidance buzzer icon
(4) Warning display
(5) 2D boundary control icon
(6) Bird’s-eye view icon
(7) Clock
(8) Indicator display area
(9) Pilot display
(10) Menu icon
(11) ECO gauge
(12) Lever pattern display
(13) Level indicator
(14) Service meter/fuel consumption gauge
(15) Meter display
(16) Single camera image
(17) Single camera direction display
(18) Camera icon
(19) Bird's-eye view image

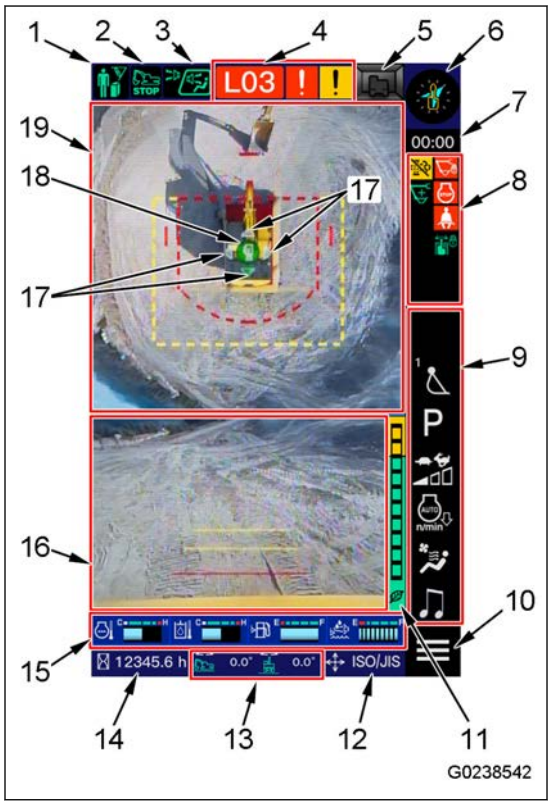

In some situations, guidance and setting screens are shown in the single-camera image (16) area.

REMARK

- The brightness or color of the objects shown on the screen changes in some cases because of the automatic adjustment function of the camera.
- For the object avoidance icon (1), machine stop control icon (2), and object avoidance buzzer icon (3), see “Object Avoidance (3-350)”.
- For the warnings shown in the warning display (4) area, see “Warning Display (3-17)”.
- For the 2D boundary control icon (5), see “2D Boundary Control (3-370)”.
- For the bird's eye view icon (6), see “Travel Heading Indicator (3-44)”, “Rollover Avoidance (3-46)”, “2D Boundary Control (3-370)”, and “Swing to Angle (3-394)”.
- For the single camera image (16), single camera direction display (17), camera icon (18), and bird's-eye view image (19), see “Handle KomVision (3-345)”.
- For the indicators shown on the indicator display (8) area, see “Indicator Display (3-36)”.
- For the icon shown on the pilot display (9) area, see “Pilot Display (3-41)”.
- For the menu icon (10), see “User Menu (3-51)”.
- For the meter display (15), see “Meter Display (3-48)”.
- For the clock (7), ECO gauge (11), level indicator (13), and service meter/fuel consumption gauge (14), see “Others (3-115)”.
- For the lever pattern display (12), see “Work Equipment Control Lever (3-146)”.

Explanation of Components

The following is an explanation of devices necessary to operate the machine.

To perform suitable operations correctly and safely, it is important to completely understand methods of operating the equipment, and the meanings of the displays.

Machine Monitor Equipment

Basic Operation of Machine Monitor

This section explains the names of buttons shown on the machine monitor and their basic operations.

(1) Toggle switch

Tap it to change the ON/OFF.

It is green when ON and gray when OFF.

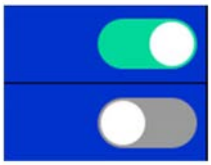

G0209078

(2) RETURN button

Tap it to go back to the previous window from the currently shown window.

G0209079

G0209083

(3) CLOSE button

Tap it to close the currently shown window.

G0209080

(4) HOME button

Tap it to go back to the standard screen.

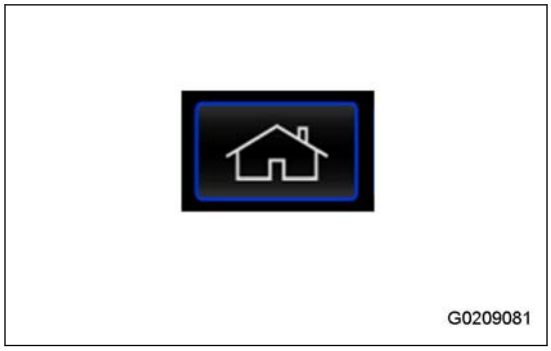

(5) Checkmark button

Tap it as an Enter button.

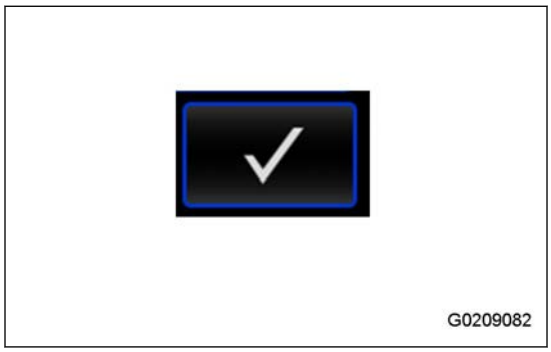

(6) Slider

Adjust the shown item.

Move the slider (A) to the right or left.

You can also push the buttons (B) and (C) to adjust.

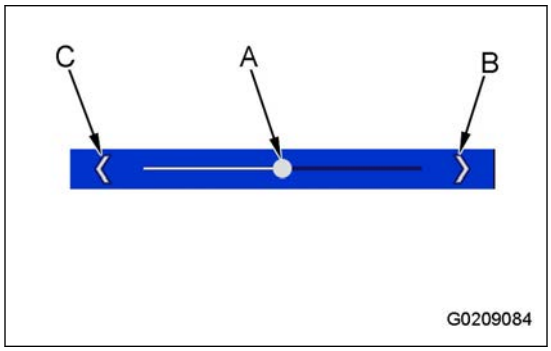

(7) Scroll bar

When you push and hold the screen and move it up and down while the scroll bar (D) is shown on the right of the screen, you can scroll the screen.

Basic Operation of Machine Monitor

Basic Operation of Machine Monitor When You Start Engine in Normal Situation

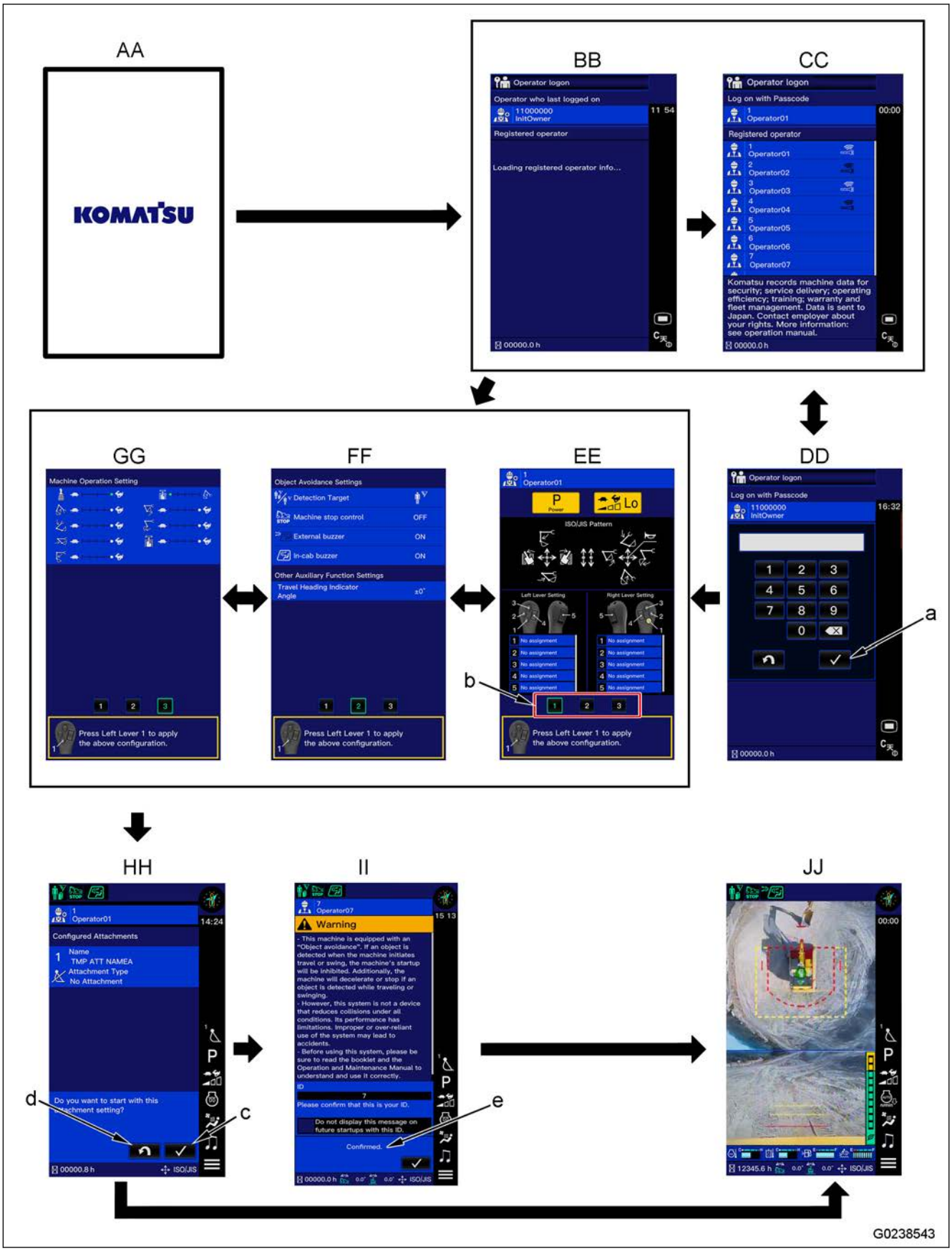

1. When you turn the starting switch to the ACC position (B) or the ON position (C), the start screen AA is shown.
2. After the start screen AA is shown, the screen automatically changes from the operator logon screen BB to CC.

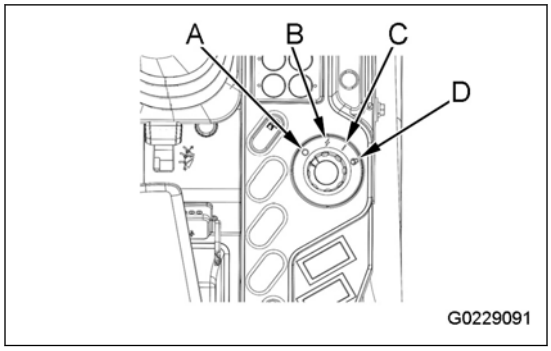

REMARK

- The maximum time until the logon screen CC is shown is approximately 20 seconds.
- If the operator ID setting is set to OFF, the screens BB, CC, and DD are skipped. The screen automatically changes to the setting confirmation screen EE.
  For the operator ID setting, see “Operator ID Setting (3-104)”.

3. Tap the applicable item from the list of operators shown. Go through operator authentication. The operator can log on when successfully authenticated. The screen changes to the setting confirmation screen EE.
   If the operator dose not log on, the engine cannot be started. If you cannot logon, consult the machine supervisor.

Passcode authentication

When you tap the operator name, the screen changes to the passcode input screen DD. Enter the passcode. Tap the checkmark button (a). If you enter the correct passcode, the authentication is completed successfully, and you can logon.

REMARK

- If you do not input the passcode correctly for 3 times, you cannot input the passcode in next 5 minutes.
- For the passcode setting, see “Operator ID Management (3-104)”.

REMARK

If the authentication setting for the selected operator ID is set to OFF, the operator authentication is skipped and logon is done.
For the operator ID authentication setting, see “Operator ID Management (3-104)”.

4. After the logon, the screen changes to the setting confirmation screen EE, and the buzzer operates. See the settings of the lever pattern, the lever switch allocations, etc. After the check of the settings, push the left work equipment lever switch (1). The settings are reflected on the machine.

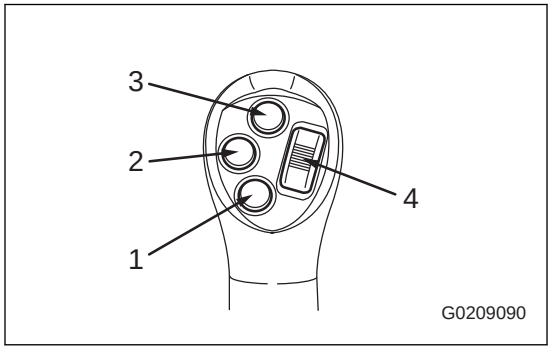

REMARK

- Tap a number button (b) at the bottom of the screen to change to setting confirmation screens EE, FF, and GG.
- For the lever pattern setting, see “Joystick Pattern Selection (3-63)”.
- For the lever switch allocation, see “Lever Switch Assignment (3-58)”.
- Until the setting is reflected on the machine, you cannot do other operations than travel even if you operate the work equipment control lever.

5. When the setting is reflected, the screen changes to the attachment confirmation screen HH. Make sure that the attachment connected to the machine agrees with the attachment shown. Tap the checkmark button (c).

REMARK

If the attachment connected to the machine and the attachment shown do not agree, tap the cancel button (d). Select the attachment connected to the machine.
For the attachment setting, see “How to Change Attachment (3-302)”.

6. After the attachment check, the screen changes to the object avoidance confirmation screen II. When you tap the checkmark button (e), the screen changes to the screen below.

REMARK

If the logged-on operator taps the checkbox of “Do not display this message on future startups with this ID.”, the object avoidance confirmation screen II will be skipped on future startups.

7. When the logon and checks are completed, the standard screen JJ is shown.

REMARK

- When the engine is started, the battery voltage can decrease suddenly by the temperature and the battery condition. In such case, the machine monitor will start again in some cases. It is not a problem.
- If the time from the previous shutdown is less than the set operator ID holding time, the operator authentication is skipped and the setting confirmation screen EE is shown after the start screen AA.
  For the operator ID holding time setting, see “Set Operator ID Holding Time (3-110)”.

System Boot-Up Error

If you operate the starting switch after you turn it to the OFF position but before the machine monitor goes off, the screen shown in the figure can be shown, and the work equipment possibly becomes inoperable.

If the screen shown in the figure is shown, turn the starting switch back to the OFF position. Wait until the machine monitor goes off. Operate the starting switch again.

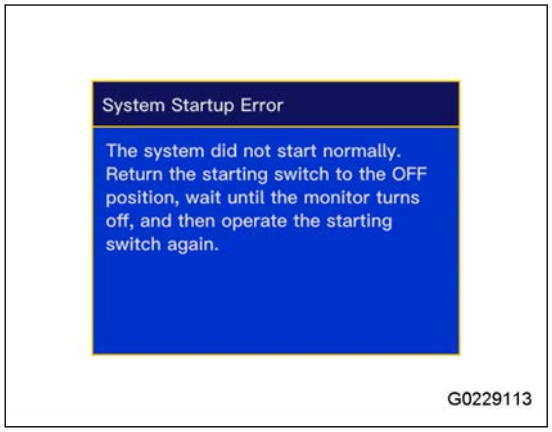

REMARK

If the battery voltage is significantly low, the system startup error can occur when you start the engine.
In this case, charge the battery or replace the battery, and start the engine again.

Basic Operation of Machine Monitor When You Start Engine While Engine Shutdown Secondary Switch is on

While the engine shutdown secondary switch (1) is set to the ON position (while the engine is stopped), the screen (as in the figure) is shown at startup and you cannot start the engine.

When the engine shutdown secondary switch (1) is set to the OFF position (normal), the machine monitor goes back to the standard screen, and you can start the engine with usual starting switch operation.

G0228726

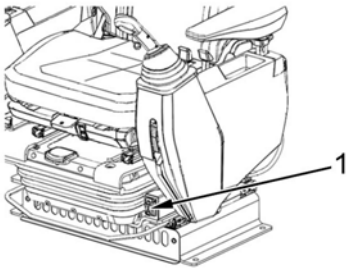

G0209092

Basic Operation of Machine Monitor When You Stop Engine in Normal Situation

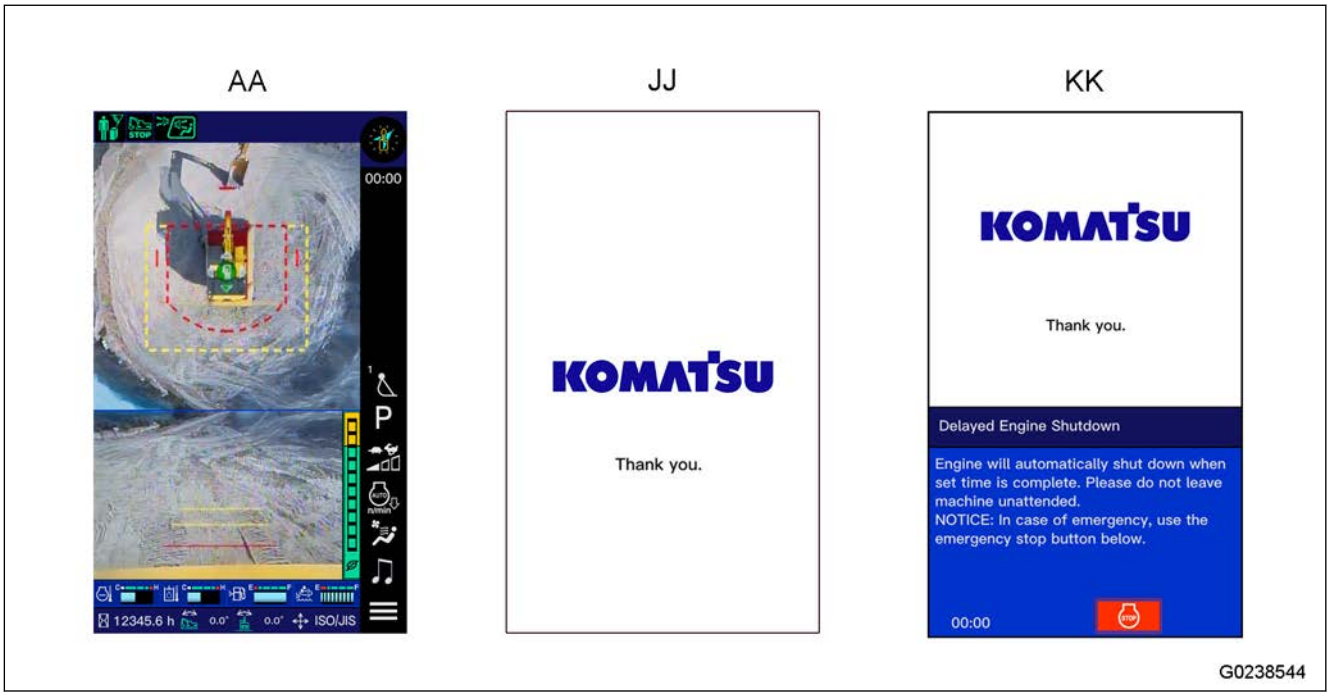

When the starting switch is turned to the OFF position (A), the end screen JJ or KK is shown, and the screen goes off.

REMARK

When you turn the starting switch to the ACC position (B), the engine stops, but the machine monitor remains on the standard screen AA. The machine monitor does not shut down.

To shut down the machine monitor when the engine is in operation, the starting switch must be moved 2 positions to OFF (A). Turn the starting switch to the OFF position (A) after the work. If the starting switch is kept at the ACC position (B), the battery can drain.
Also, this machine has an auto power off function.
For the auto power off, see “Auto Power Off (3-15)”.

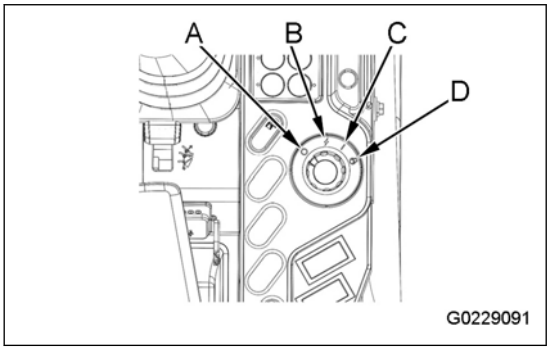

Auto Power Off

Auto power off is a function that shuts down the system automatically to prevent battery drainage.

If no operation is done for a specified time after the engine is stopped, the main power supply is automatically turned off.

If the time until the auto power-off works is 30 seconds, the alarm makes a “beep” sound, and the countdown is shown on the machine monitor. When you tap the machine monitor or do other operations, the countdown to auto power off is reset.

You can change the auto power off operation time.

For the setting of the auto power off, see “Auto Power Off Time Setting (3-66)”.

REMARK

If it becomes time for the auto power off to work after the auto idle stop function stops the engine, the auto power off will work. For the auto idle stop, see “Auto Idle Stop Function (3-273)”.

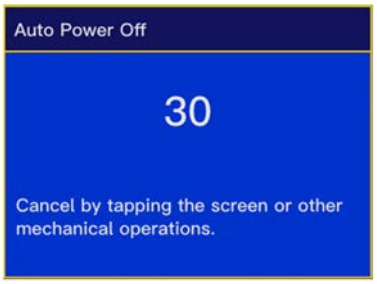

G0228728

End Screen When There is Message

When there is a message from Komatsu distributor, the message is shown on the end screen.

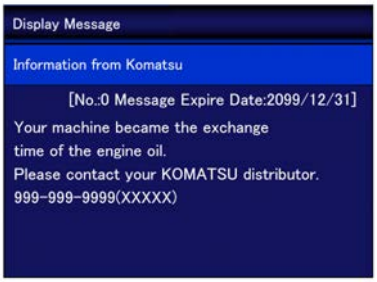

G0228729

When Operator Identification or Operator ID Authentication Setting is OFF

If the operator ID setting is set to OFF or the authentication setting for the operator ID is set to OFF, a message is shown on the ending screen. Lock the battery disconnect switch as shown by the message.

For how to lock the battery disconnect switch, see “Operate Battery Disconnect Switch (3-170)”.

REMARK

You can turn on the operator ID setting and the authentication setting of the operator ID for higher security. When you use the machine in an area where there is a danger of theft or vandalism, it is recommended to set these settings to ON.
For the procedure of the operator ID setting, see “Operator ID Setting (3-104)”.
For the procedure of the operator ID authentication setting, see “Operator ID Management (3-104)”.

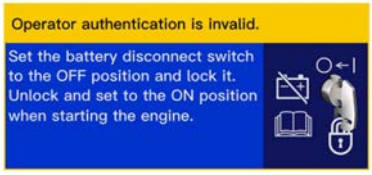

G0228730

Basic Operation of Machine Monitor When Lock Lever is Released

In this machine, the screen automatically changes to the standard screen when the lock lever is released.

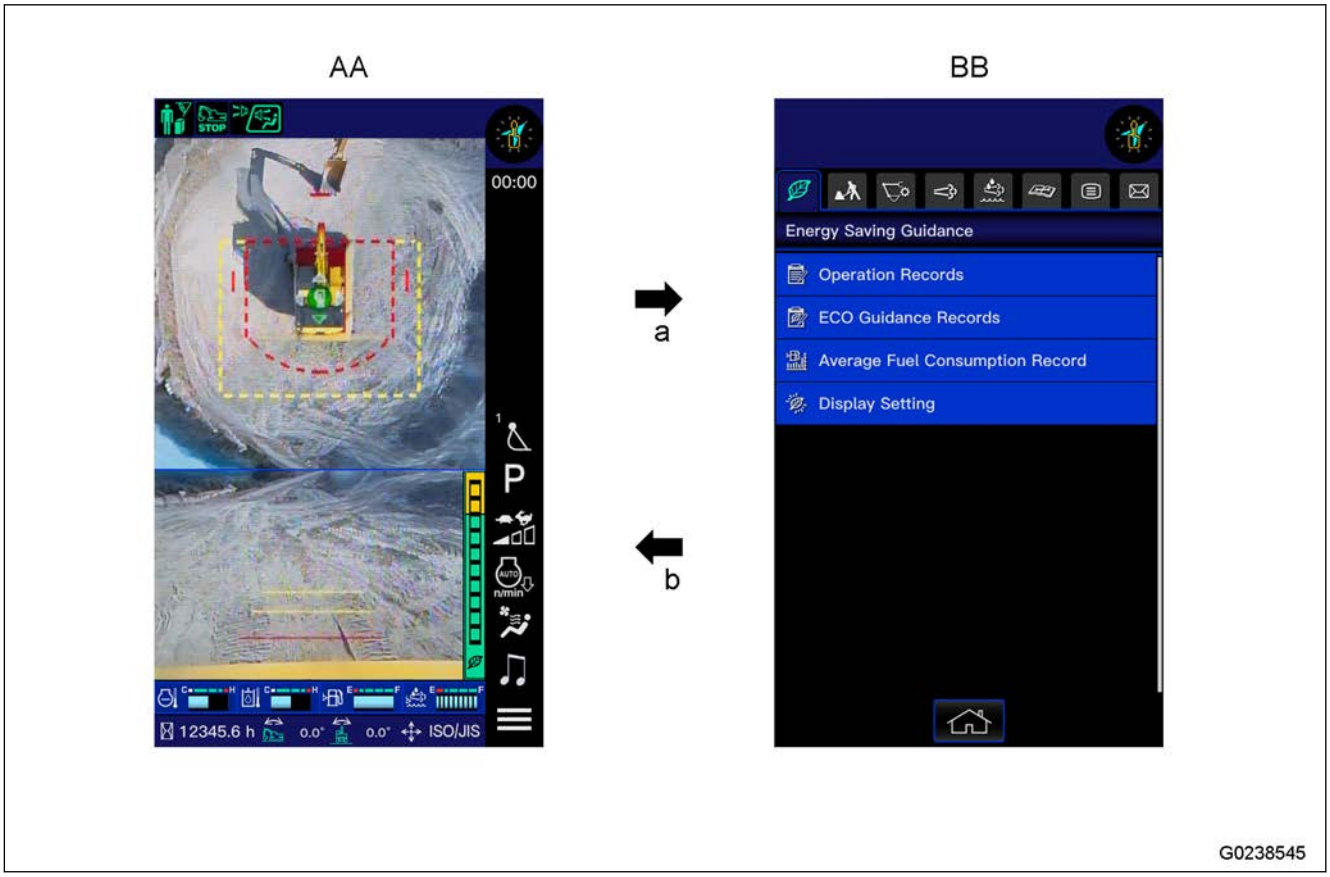

AA: Standard screen BB: Screen without camera image (user menu, etc.)

(a) Changeover to screen BB without camera image such as user menu

On this machine, the screen can be changed to screen BB with no camera image, such as the user menu, only when the lock lever is in the LOCK position (L).

If you tap the menu icon, etc., to change to screen BB without camera image while the lock lever is in the FREE position (F), “Set the lock lever to the Lock position.” pop-up is shown. If you set the lock lever in the LOCK position (L) while this screen is shown, the screen changes to the screen BB without camera image.

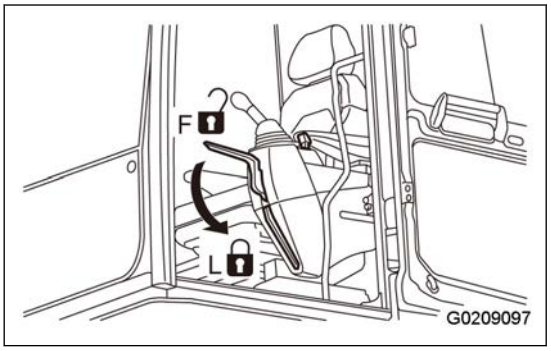

(b) Changeover to the standard screen AA

If the lock lever is set to the FREE position (F) while the screen BB without camera image, such as the user menu, is shown, the screen automatically changes to the standard screen AA.

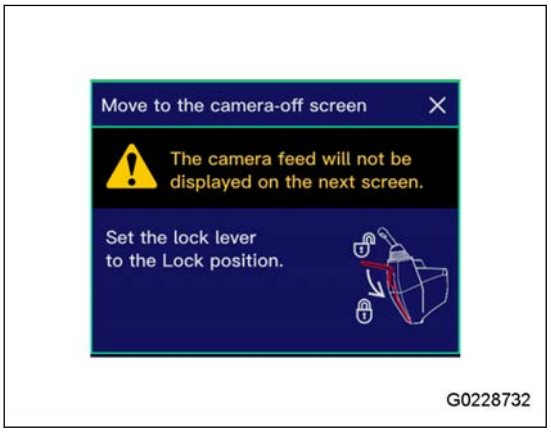

Warning Display

NOTICE

When one of the action levels (“L01” to “L04”) is shown on the machine monitor, there is a problem on the machine.
Do the necessary remedy instructed in List of Action Level Displays and Required Remedies.
The caution lamp comes on in red when an action level is shown, and it gives a warning to stop the machine immediately, or to stop the current operation temporarily.
If no remedy is done, it can cause bad effects on the machine. Do the remedy immediately.

(1) Action level display

(2) Caution lamp

(3) Caution lamp

(4) Engine coolant temperature caution lamp

(5) Hydraulic oil temperature caution lamp

(6) Fuel level caution lamp

(7) DEF level caution lamp

When 1 warning occurs, it is shown on the caution lamp (2).

When 2 warnings occur, they are shown on the caution lamps (2) and (3).

When 3 or more of warnings occur, they are shown on the caution lamps (2) and (3) in one and then the other at intervals of 2 seconds.

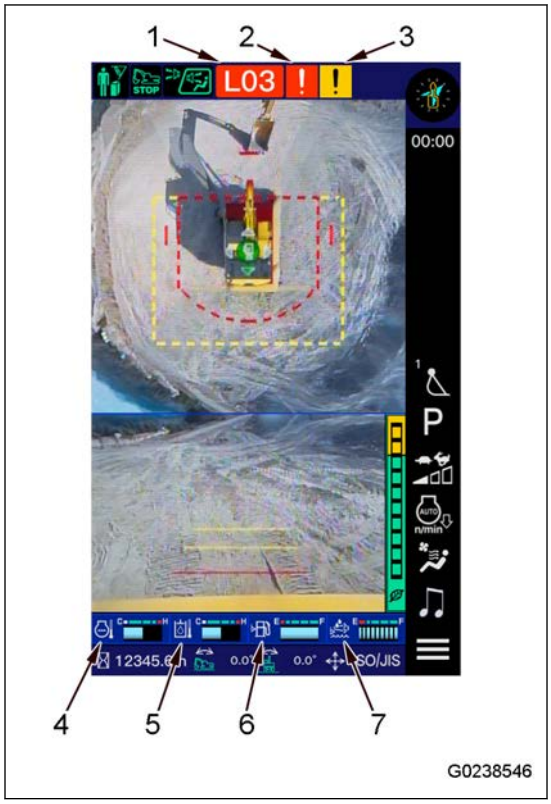

REMARK

Some warnings show only the caution lamp and do not show the action level.

Action Level Display

The action level display shows the degree of urgency of the problem currently found on the machine by “L01” to “L04”.

The larger the number shown is, the more dangerous the effect can be on safety or the machine if no remedy is taken.

If an action level is shown on the machine monitor, see the message shown on the machine monitor.

When you tap the warning display while the action level display is shown, the list of the current abnormality is shown.

Do the necessary remedies in response to the message shown on the machine monitor.

G0238547

G0228733

List of Action Level Displays and Required Remedies

Degree of urgency	Action level	Buzzer	Caution lamp	Action
High ↑	L04	Operates continuously	Comes on in red	Stop the machine immediately and consult your Komatsu distributor for inspection and maintenance.
	L03	Operates intermittently	Comes on in red	Stop the operation, move the machine to a safe area, and consult your Komatsu distributor for inspection and maintenance.
↓ Low	L02	Operates intermittently	Comes on in red	Stop the operation, and then run the engine at medium speed with no load or stop the engine. Or, stop the operation, move the machine to a safe area, and then do the inspection and maintenance. If the condition does not become better, consult your Komatsu distributor for inspection and maintenance.
	L01	Does not operate	Comes on in yellow	Some functions can be restricted, but the machine can be operated. After you complete the operation, be sure to do the inspection and maintenance. Consult your Komatsu distributor for inspection and maintenance as needed.

Caution Lamp List

NOTICE

- **These caution lamps do not guarantee the condition of the machine.**
  Do not rely on the caution lamps for check-before-starting (start-up inspection). Be sure to get off the operator seat and examine each item directly.
- **If no remedy is taken when a red caution lamp is shown, there can be a dangerous effect on safety or the machine.**
  Do the remedy immediately.
- **Based on the contents of the caution, the engine output or engine speed can be restricted and the machine operation speed can possibly become slow.**

Caution Lamp and Color

Symbol	Type of caution lamp	Display color/Machine condition (action level)			
		Red	Yellow	White	Blue
G0210260	Engine coolant temperature caution lamp	High temperature (L02)	-	Low temperature	Normal
G0210261	Hydraulic oil temperature caution lamp	High temperature (L02)	-	Low temperature	Normal
G0210262	Fuel level caution lamp	Low level	-	-	Normal
G0055288	System caution lamp	Abnormal (L04/L03)	Abnormal (L01)	-	-
G0055289	Hydraulic system caution lamp	Abnormal (L04/L03)	Abnormal (L01)	-	-
G0055293	KDPF system caution lamp	Abnormal (L04/L03)	Abnormal (L01)	-	-
G0055294	KDPF soot accumulation caution lamp	Abnormal (L03)	Accumulated (L01)	-	-
G0062782	DEF level caution lamp	Abnormal (L04/L03)	Cannot be sensed	-	Normal
G0196229	DEF system caution lamp	Abnormal (L04/L03)	Abnormal (L01)	-	-

Symbol	Type of caution lamp	Display color/Machine condition (action level)			
		Red	Yellow	White	Blue
G0062783	DEF system high-temperature stop caution lamp	-	Engine is stopped by high temperature (L01)	-	-
G0055295	Engine system caution lamp	Abnormal (L04/L03)	Abnormal (L01)	-	-
G0055298	Engine oil pressure caution lamp	Low oil pressure (L03)	-	-	-
G0055307	Engine oil level caution lamp	-	Low oil level (L01)	-	-
G0062784	Radiator coolant level caution lamp	Low coolant level (L02)	Low coolant level (L01)	-	-
G0055301	Charge level caution lamp	Abnormal (L03)	-	-	-
G0201099	Water separator caution lamp	Abnormal	-	-	-
G0055302	Air cleaner clogging caution lamp	-	Clogged (L01)	-	-
G0173844	Air conditioner system caution lamp	-	Abnormal (L01)	-	-
G0193081	Quick coupler caution lamp	Abnormal (L03)	-	-	-
G0055305	Maintenance time caution lamp	Due time is over.	Notice	-	-
G0055299	Engine overrun caution lamp	Overspeed (L02)	-	-	-

Symbol	Type of caution lamp	Display color/Machine condition (action level)			
		Red	Yellow	White	Blue
G0173846	Camera system caution lamp	Abnormal (L03)	Abnormal (L01)	-	-
G0136416	Camera system caution lamp	-	Abnormal (L01)	-	-
G0173845	Fan control system caution lamp	Abnormal (L03)	Abnormal (L01)	-	-
G0209104	NOx control device system caution lamp	Abnormal (L04/L03)	Abnormal (L01)	-	-
G0210263	Calibration state caution lamp	-	Abnormal (L01) Defective start-up (-)	-	-
G0210264	Cylinder function state caution lamp	-	Cylinder reset Not done (-)	-	-
G0209105	Radar system caution lamp	-	Abnormal (L01)	-	-
G0209106	Hydraulic oil filter clogging caution lamp	-	Clogged (L01)	-	-
G0223848	Intelligent machine control equipment state caution lamp	-	Abnormal (-)	-	-
G0223849	Intelligent machine control system state caution lamp	-	Abnormal (-)	-	-
G0223850	IMU state caution lamp	-	Defective start-up Low precision (-)	-	-
G0167372	Emergency stop caution lamp	Emergency stop area	-	-	-

For the explanation of caution lamps and required remedies, see the section of the caution lamps.

Engine Coolant Temperature Caution Lamp

The engine coolant temperature caution lamp gives a warning about states caused by engine coolant temperature.

G0209107

When abnormal

The caution lamp comes on in red, and the action level “L02” is shown.

The engine coolant temperature is abnormally high.

While the lamp is on, the overheat prevention system is automatically activated, and the engine speed decreases.

Stop the operation, and run the engine at low idle until the color of the caution lamp becomes blue (display at correct temperature).

When temperature is low

The caution lamp comes on in white.

The engine coolant temperature is low.

It is necessary to warm up the engine.

Do the warm-up operation for the engine until the caution lamp changes to the normal display color (blue) at the correct temperature.

For the method of engine warm-up operation, see “Engine Warm-up Operation (3-239)”.

When temperature is correct

The caution lamp comes on in blue.

Hydraulic Oil Temperature Caution Lamp

The hydraulic oil temperature caution lamp gives a warning about states caused by hydraulic oil temperature.

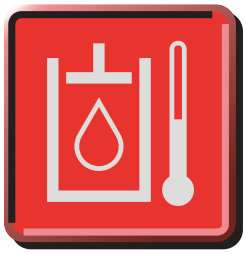

G0209108

When abnormal

The caution lamp comes on in red, and the action level “L02” is shown.

The hydraulic oil temperature is abnormally high.

Stop the operation, and run the engine at low idle or stop it until the color of the caution lamp becomes blue (display at correct temperature).

When temperature is low

The caution lamp comes on in white.

The hydraulic oil temperature is low.

It is necessary to warm up the hydraulic component.

Do the warm-up operation for the hydraulic component until the caution lamp changes to the normal display color (blue) at the correct temperature.

For the procedure for the warm-up operation of the hydraulic component, see “How to Do Hydraulic System Warm-up Operation (3-241)”.

When temperature is correct

The caution lamp comes on in blue.

Fuel Level Caution Lamp

The fuel level caution lamp gives a warning about low level of remaining fuel.

G0209109

When battery level is low

The caution lamp comes on in red.

The remaining fuel quantity is lowered to approximately 45 ℓ {11.9 US gal} or below.

Add fuel immediately.

When normal

The caution lamp comes on in blue.

System Caution Lamp

The system caution lamp gives a warning about a problem in the machine system such as sensors.

G0055320

When the action level “L04” is shown

The caution lamp lights up in red, and the alarm buzzer operates continuously.

Stop the machine immediately and consult your Komatsu distributor for inspection and maintenance.

When the action level “L03” is shown

The caution lamp lights up in red, and the alarm buzzer operates intermittently.

Stop the operation, move the machine to a safe area, and consult your Komatsu distributor for inspection and maintenance.

When the action level “L01” is shown

The caution lamp lights up in yellow.

Some functions can be restricted, but the machine can be operated.

When you complete the operation, be sure to do the inspection and maintenance. Consult your Komatsu distributor for inspection and maintenance as needed.

Hydraulic System Caution Lamp

The hydraulic system caution lamp gives a warning about an abnormality in the hydraulic system.

G0055321

When the action level “L04” is shown

The caution lamp lights up in red, and the alarm buzzer operates continuously.

Stop the machine immediately and consult your Komatsu distributor for inspection and maintenance.

When the action level “L03” is shown

The caution lamp lights up in red, and the alarm buzzer operates intermittently.

Stop the operation, move the machine to a safe area, and consult your Komatsu distributor for inspection and maintenance.

When the action level “L01” is shown

The caution lamp lights up in yellow.

Some functions can be restricted, but the machine can be operated.

When you complete the operation, be sure to do the inspection and maintenance. Consult your Komatsu distributor for inspection and maintenance as needed.

KDPF System Caution Lamp

The KDPF system caution lamp gives a warning about a problem in the KDPF system.

G0055325

When action level “L04” is shown

The caution lamp comes on in red, and the alarm buzzer operates continuously.

Stop the machine immediately and consult your Komatsu distributor for inspection and maintenance.

When action level “L03” is shown

The caution lamp comes on in red, and the alarm buzzer operates intermittently.

Stop the operation, move the machine to a safe area, and consult your Komatsu distributor for inspection and maintenance.

When action level “L01” is shown

The caution lamp comes on in yellow.

Some functions can be restricted, but the machine can be operated.

After you complete the operation, be sure to do the inspection and maintenance. Consult your Komatsu distributor for inspection and maintenance as needed.

KDPF Soot Accumulation Caution Lamp

The KDPF soot accumulation caution lamp gives a warning that the soot is accumulated in the KDPF or the filtering function of the KDPF is lowered too much.

To stop the alarm, do the manual stationary regeneration of KDPF.

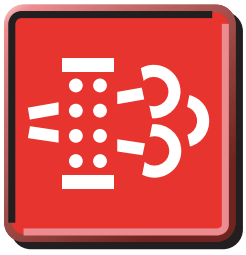
G0055326

When abnormal

The caution lamp comes on in red, and the action level “L03” is shown.

The alarm buzzer operates intermittently.

System failure occurs as excessive quantity of soot is accumulated in the KDPF or filter function is reduced.

Immediate remedy is required.

Move the machine to a safe area immediately and do the manual stationary regeneration.

The manual stationary regeneration starts automatically in some cases to protect the KDPF system.

When soot is accumulated

The caution lamp comes on in yellow, and the action level “L01” is shown.

Much soot is accumulated in KDPF, but the operation is possible.

After you complete the operation, move the machine to a safe area and be sure to do the manual stationary regeneration.

DEF Level Caution Lamp

G0062788

The DEF level caution lamp gives a warning that the DEF level becomes low.

When the caution lamp comes on in red, immediately add DEF.

In the abnormal condition, the engine power deration is started, and it gives a notification for maintenance or repair of the emission control system.

When lamp comes on in red

If the DEF tank remaining level is lower than “Severe Inducement” level, the action level “L04” is shown, and Inducement changes to “Final Inducement”. The engine speed is fixed at low idle.

If the DEF tank remaining level is lower than “Mild Inducement” level, the action level “L04” is shown, and Inducement changes to “Severe Inducement”. The engine speed lowers largely.

If the DEF tank remaining level is lower than “Escalated Warning” level, Inducement changes to “Mild Inducement”, and the action level “L03” is shown. The engine speed lowers.

If the DEF tank remaining level is lower than “Warning” level, Inducement changes to “Escalated Warning”. At this time, the action level is not shown. Add DEF immediately not to let it change to the next level.

If the DEF tank remaining level becomes low, Inducement changes to “Warning”. At this time, the action level is not shown. Add DEF immediately.

When lamp comes on in yellow

The caution lamp comes on in yellow in the cases that follow.

- When the DEF tank level changes largely because of freezing or other causes, and the tank remaining level is not sensed correctly
- When you add DEF after you turn the starting switch to the OFF position
- When the DEF tank level sensor is defective

DEF System Caution Lamp

G0196232

The DEF system caution lamp gives a warning that there is a problem in the DEF system.

When the caution lamp comes on in yellow or in red, do the necessary remedies.

In the abnormal condition, the engine power deration will be started to promote the maintenance or repair of the emission control system.

When lamp comes on in red

If the action level “L04” is shown in “Final Inducement”, the engine speed is fixed at low idle.

If the action level “L04” is shown in “Severe Inducement”, the engine speed lowers largely.

If the action level “L03” is shown in “Mild Inducement”, the engine speed lowers.

When lamp comes on in yellow

When the action level is “L01” in the level of “Warning 1” or “Warning 2”.

If no maintenance is done in “Warning 2”, Inducement changes to the next level.

DEF System High Temperature Stop Caution Lamp

The DEF system high temperature stop caution lamp gives a warning when the times of engine stop in the condition of high temperature of DEF system exceeds the specified number of times.

G0062790

When lamp comes on in yellow

The action level “L01” is shown.

Consult your Komatsu distributor for inspection and maintenance as needed.

Engine System Caution Lamp

CAUTION

If you continue the operation while the caution lamp comes on in red, soot accumulates and combustion is accelerated in the KDPF. This can cause the KDPF and exhaust gas temperature to increase too much. Stop the engine immediately.

The engine system caution lamp gives a warning about a problem in the engine system.

G0055329

When action level “L04” is shown

The caution lamp comes on in red, and the alarm buzzer operates continuously.

Stop the machine immediately and consult your Komatsu distributor for inspection and maintenance.

When action level “L03” is shown

The caution lamp comes on in red, and the alarm buzzer operates intermittently.

Stop the operation, move the machine to a safe area, and consult your Komatsu distributor for inspection and maintenance.

When action level “L01” is shown

The caution lamp comes on in yellow.

Some functions can be restricted, but the machine can be operated.

After you complete the operation, be sure to do the inspection and maintenance. Consult your Komatsu distributor for inspection and maintenance as needed.

Engine Oil Pressure Caution Lamp

The engine oil pressure caution lamp gives a warning about a problem of the engine lubricating oil pressure.

G0055331

When oil pressure is low

The caution lamp lights up in red, and the action level “L03” is shown. The alarm buzzer operates intermittently.

Stop the operation, move the machine to a safe area, and consult your Komatsu distributor for inspection and maintenance.

Engine Oil Level Caution Lamp

The engine oil level caution lamp gives a warning about lower level of the engine lubricating oil.

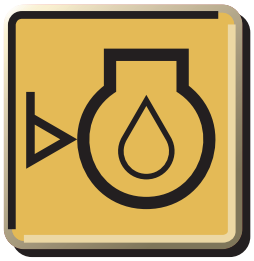
G0055332

It is shown only when the engine is stopped.

When oil level is low

The caution lamp comes on in yellow, and the action level “L01” is shown.

The oil level in the engine oil pan is low.

Examine the oil level in the oil pan, and add oil.

For details, see “How to Examine Oil Level in Engine Oil Pan, Add Oil (3-208)”.

If it occurs again in a short period, engine oil possibly leaks.

Consult your Komatsu distributor for inspection and maintenance.

Radiator Coolant Level Caution Lamp

The radiator coolant level caution lamp gives a warning about lower level of the radiator coolant.

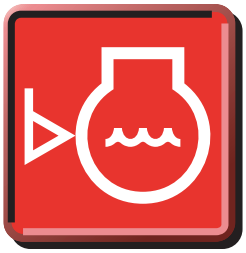
G0062791

When the coolant level is continuously low

The caution lamp comes on in red, and the action level “L02” is shown. The alarm buzzer operates intermittently.

Stop the operation, move the machine to a safe area, and examine the coolant level in the radiator and add coolant. For details, see “How to Examine Coolant Level and Add Coolant (3-206)”.

When the coolant level is low

The caution lamp comes on in yellow, and the action level “L01” is shown.

The radiator coolant level is low.

Examine the coolant level in the expansion tank of the radiator, and add coolant. For details, see “How to Examine Coolant Level and Add Coolant (3-206)”.

If it occurs again in a short period, coolant possibly leaks from the radiator. Consult your Komatsu distributor for inspection and maintenance.

Charge Level Caution Lamp

The charge level caution lamp gives a warning about a problem in the charge system while the engine is in operation.

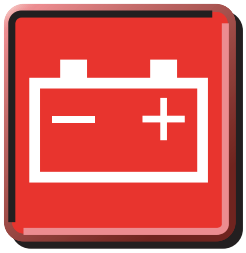
G0055335

When abnormal

The caution lamp comes on in red, and the action level “L03” is shown. The alarm buzzer operates intermittently.

The battery is not charged correctly while the engine is in operation.

Stop the engine, examine the alternator belt for damage, and then consult your Komatsu distributor for inspection and maintenance.

Water Separator Caution Lamp

The water separator caution lamp gives a warning that water is accumulated in the water separator.

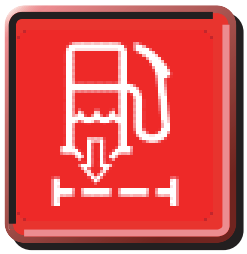
G0201100

When abnormal

The caution lamp comes on in red.

Water is accumulated in the water separator.

Stop the engine and drain water from the water separator.

For details, see “How to Examine Water Separator, Drain Water and Sediment (3-203)”.

REMARK

The water separator is integrated with the fuel prefilter.
It is installed at the bottom of the fuel prefilter. It can be removed.

Air Cleaner Clogging Caution Lamp

The air cleaner clogging caution lamp gives a warning that the air cleaner is clogged.

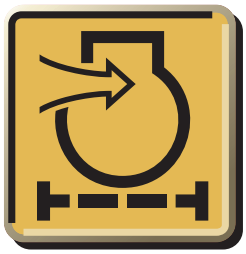
G0055336

When clogged

The caution lamp lights up in yellow, and the action level “L01” is shown.

The air cleaner is clogged.

Stop the engine. Then, check and clean the air cleaner. For details, see “How to Examine, Clean and Replace Air Cleaner (4-20)”.

Air Conditioner System Caution Lamp

The air conditioner system caution lamp shows an abnormality in the air conditioner system.

G0173850

When abnormal

The caution lamp lights up in yellow, and the action level “L01” is shown.

A problem is found in the air conditioner system.

Consult your Komatsu distributor for the inspection and maintenance as fast as possible.

Quick Coupler Caution Lamp

During the normal operation, the quick coupler caution lamp comes on to let the operator know that the quick coupler is enabled.

NOTICE

The alarm buzzer operates intermittently or continuously during operation.

During abnormal operation

If the oil pressure in the quick coupler system decreases, the quick coupler caution lamp comes on.

The alarm buzzer operates intermittently, and the error message “L03” is shown on the monitor screen.

For detail, see “Handle Quick Coupler (6-5)”.

Maintenance Time Caution Lamp

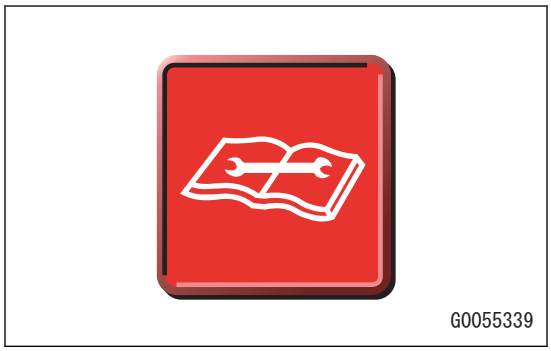

The maintenance time caution lamp shows the notices and alarms for the maintenance time.

The lamp comes on when the starting switch is turned to the ON position, goes off after 30 seconds, and the screen changes to the standard screen.

When due time is over

The caution lamp comes on in red.

The maintenance due time is over.

If the procedure is not done, the machine efficiency will degrade or the service life of the machine will decrease. Do the necessary maintenance as fast as possible.

When notice is given

The caution lamp comes on in yellow.

The maintenance time goes near.

Prepare the necessary parts for maintenance.

REMARK

- Tap “Menu Icon” on the standard screen. When you select “Maintenance” tab and tap “Maintenance Item”, when the maintenance items are shown. See the time required for the maintenance.
- By default, the maintenance time caution lamp (yellow) is set to come on when the remaining time becomes 30 hours or less. You can change this setting. Consult your Komatsu distributor to change it.
- For the operations on “Maintenance” tab screen, see “Maintenance Item Screen Setting (3-91)”.

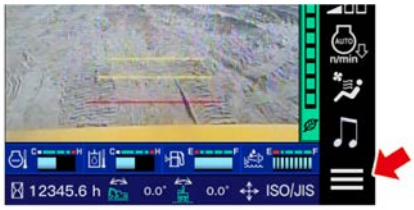

G0209111

G0228734

Engine Overrun Caution Lamp

The engine overrun caution lamp gives a warning about the overspeed of the engine.

G0055333

During overspeed of engine

The caution lamp comes on in red, and the action level “L02” is shown.

The alarm buzzer operates intermittently.

Stop the work immediately. The engine and hydraulic component can have damage.

Operate the machine with moderate travel speed until the engine overrun caution lamp goes off.

Camera System Caution Lamp

WARNING

Do not move the machine unless the camera image is shown on the machine monitor.
Be sure to allocate a signalman when you move the machine to a safe area. If there is a sign, the operator must see the sign carefully and obey the instructions of the signalman.

The camera system caution lamp gives a warning about the trouble in camera signal caused by breakage in cables, loose and disconnected connectors.

G0173853

When action level “L03” is shown

A problem is found in the rear camera signal.

The caution lamp comes on in red, and the alarm buzzer operates intermittently.

While the caution lamp is on, the single image of the rear camera and a part of the bird's-eye view image are not shown on the machine monitor.

Stop the operation, move the machine to a safe area, and consult your Komatsu distributor for inspection and maintenance.

When action level “L01” is shown

The caution lamp comes on in yellow.

While the caution lamp is on, the single image in the direction of the failed camera and a part of the bird's-eye view image are not shown on the machine monitor.

Before you operate the machine, visually examine the safety around the machine.

After you complete the operation, be sure to do the inspection and maintenance. Consult your Komatsu distributor for inspection and maintenance as needed.

Camera System Caution Lamp

If a problem occurs in the KomVision system controller, the camera system caution lamp comes on in yellow, and the action level “L01” is shown.

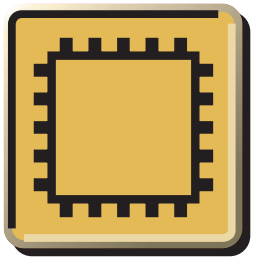
G0136436

If the caution lamp is on, the bird' s-eye view and camera images are not shown correctly.

Before you operate the machine, visually examine the safety around the machine.

Consult your Komatsu distributor for inspection and maintenance.

Fan Control System Caution Lamp

The fan control system caution lamp gives a warning about a problem in the fan control system.

G0173852

When the action level “L03” is shown

The caution lamp lights up in red, and the alarm buzzer operates intermittently.

Stop the operation, move the machine to a safe area, and consult your Komatsu distributor for inspection and maintenance.

When the action level “L01” is shown

The caution lamp lights up in yellow.

Some functions can be restricted, but the machine can be operated.

When you complete the operation, be sure to do the inspection and maintenance. Consult your Komatsu distributor for inspection and maintenance as needed.

NOx Control Device System Caution Lamp

The NOx controller system caution lamp gives a warning about abnormality in the NOx controller system.

G0210265

When action level “L04” is shown

The caution lamp comes on in red, and the alarm buzzer operates continuously.

Stop the machine immediately and consult your Komatsu distributor for inspection and maintenance.

When action level “L03” is shown

The caution lamp comes on in red, and the alarm buzzer operates intermittently.

Stop the operation, move the machine to a safe area, and consult your Komatsu distributor for inspection and maintenance.

When action level “L01” is shown

The caution lamp comes on in yellow.

Some functions can be restricted, but the machine can be operated.

After you complete the operation, be sure to do the inspection and maintenance.

Consult your Komatsu distributor for inspection and maintenance as needed.

Calibration State Caution Lamp

(If equipped)

The calibration state caution lamp shows the calibration state of the machine.

G0210266

When the calibration is not done

The caution lamp comes on in yellow (the action level is not shown).

The calibration of one of the devices installed to the machine is not done.

Consult your Komatsu distributor for inspection and maintenance.

Cylinder Function State Caution Lamp

(If equipped)

The cylinder function state caution lamp shows that the cylinder stroke measurement function is not reset.

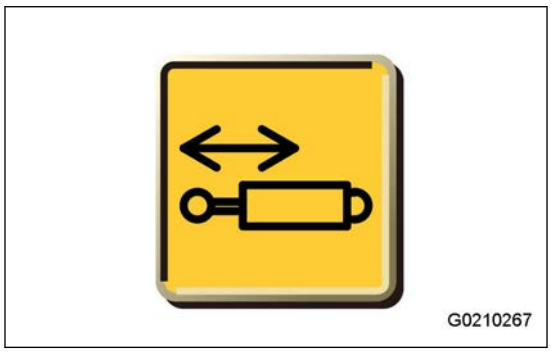

If the stroke measurement function of the bucket cylinder is not reset after the start

The caution lamp comes on in yellow (the action level is not shown).

The cylinder stroke measurement function is not reset at all after the start.

The cylinder stroke is possibly recognized incorrectly. Before the work, hold the bucket cylinder at the stroke end for 2 seconds.

If this warning is not cleared, consult your Komatsu distributor for inspection and maintenance.

REMARK

When the cylinder function state caution lamp is shown, the alarm guidance window is shown.

The guidance window closes after a specified time or when you tap the CLOSE button, but the cylinder function state caution lamp remains on until the problem is resolved.

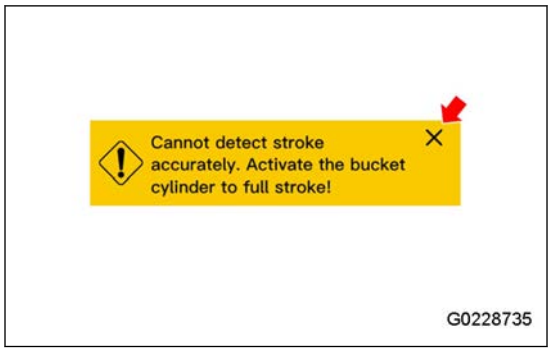

Radar System Caution Lamp

The radar system caution lamp gives a warning about a trouble in the radar system.

When abnormal

The caution lamp comes on in yellow, and the action level “L01” is shown.

If the caution lamp is on, the object avoidance does not operate correctly.

Before you operate the machine, visually examine the safety around the machine.

Consult your Komatsu distributor for inspection and maintenance.

Hydraulic Oil Filter Clogging Caution Lamp

The hydraulic oil filter clogging caution lamp gives a warning that the hydraulic oil filter is clogged.

When clogged

The caution lamp comes on in yellow, and the action level “L01” is shown.

The hydraulic oil filter is clogged.

Stop the engine after the work is completed, and then replace the hydraulic oil filter element with a new one.

For replacement of the hydraulic oil filter element, see “How to Replace Hydraulic Oil Filter Element (4-89)”.

Intelligent Machine Control Equipment State Caution Lamp

(If equipped)

The intelligent machine control equipment state caution lamp gives a warning about a problem with intelligent machine control equipment, such as sensors.

When abnormal

The caution lamp comes on in yellow.

A problem is found in an intelligent machine control equipment.

The intelligent machine control function is restricted. Intelligent machine control cannot be done. Work other than intelligent machine control can be done.

If this warning is not cleared, consult your Komatsu distributor for inspection and maintenance.

Intelligent Machine Control System State Caution Lamp

(If equipped)

The intelligent machine control system state caution lamp gives a warning about a problem in the intelligent machine control system, such as a defective controller connection.

G0224081

When abnormal

The caution lamp comes on in yellow.

A problem is found in a sensor related to intelligent machine control.

The intelligent machine control function is restricted. Intelligent machine control cannot be done. Work other than intelligent machine control can be done.

If this warning is not cleared, consult your Komatsu distributor for inspection and maintenance.

IMU State Caution Lamp

(If equipped)

The IMU state caution lamp gives a warning about a problem in IMU.

G0224082

When abnormal

The caution lamp comes on in yellow (the action level is not shown).

The IMU cannot start normally or the precision is low.

Turn the starting switch to the ON position. After that, if you operate the machine in 2 seconds or less, the caution lamp can come on.

In such a case, wait until the warning lamp goes off, or set the starting switch to the OFF position and then set it to the ON position again. At this time, make sure that the machine and the work equipment are grounded and in stable condition.

Do not move the machine for minimum 3 seconds after you turn the starting switch to the ON position.

The IMU does not operate correctly. So the intelligent machine control is not available or precision of the intelligent machine control is low. At this time, you can do the operations other than intelligent machine control.

If this caution lamp does not go off even after you operate the starting switch, consult your Komatsu distributor for inspection and maintenance.

Emergency Stop Caution Lamp

(If equipped)

When the work equipment does not stop in the emergency stop area for an unknown cause while the cab interference prevention is activated, the operation of the work equipment stops, and the emergency stop caution lamp comes on.

G0167373

The lamp goes off when you operate the work equipment control lever to move the bucket forward while the temporary control cancel switch is pushed.

For the position of the temporary control cancel switch, see “Controls and Gauges Names (3-5)”.

Indicator Display

The indicator display part consists of the indicators that show the operation state of each function. Indicators are shown when the related item is in operation or has an abnormality.

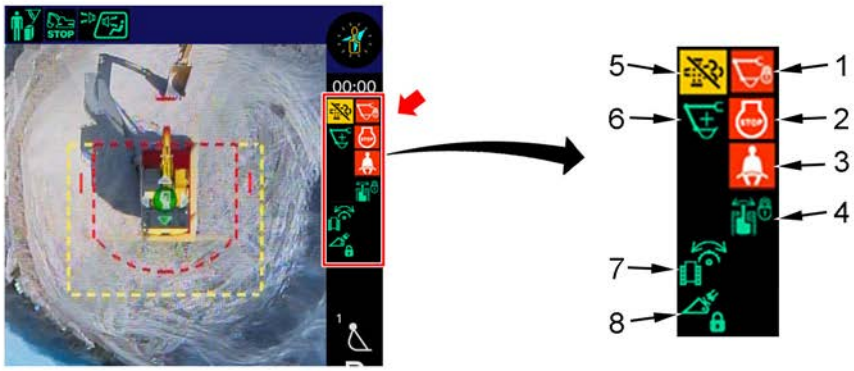

(1) Lock lever indicator
(2) Engine stop indicator
(3) Seat belt indicator
(4) Swing lock indicator
(5) Aftertreatment devices regeneration indicator
(6) Power maximizing indicator
(7) Track control enabled indicator
(8) Quick coupler indicator (if equipped)

Seat Belt Indicator

The seat belt indicator is shown when the seat belt is not fastened. It goes off when the seat belt is fastened.

To fasten the seat belt, see “How to Fasten and Unfasten Seat Belt (3-230)”.

Seat Belt Reminder

The seat belt reminder is installed on this machine.

When a swing or travel operation is made while the seat belt is not fastened, a buzzer makes a “beep-beep-beep” sound to tell the operator that the seat belt is not fastened.

The seat belt reminder is released when the seat belt is fastened.

If you want to change the setting, consult your Komatsu distributor.

Seat Belt Reminder Revolving Lamp

(If equipped)

The setting for the seat belt reminder must be changed. If you want to change the setting, consult your Komatsu distributor.

In machines with a seat belt reminder revolving lamp, the revolving lamp operates in response to the condition of the seat belt fastening.

The supervisor can set the conditions for the seat belt reminder revolving lamp to operate.

For details, see “Supervisor Setting (3-110)”.

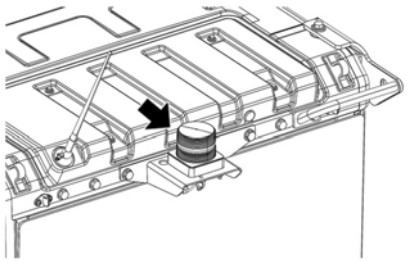

G0229092

Engine Stop Indicator

The engine stop indicator is shown while the engine is stopped. It goes off when the engine is started.

G0055351

Lock Lever Indicator

The lock lever indicator comes on when the lock lever is set to the LOCK position.

It goes off when the lock lever is set to the FREE position.

G0173860

Lock Lever Automatic Lock Cancel Switch Indicator

The lock lever automatic lock cancel switch indicator comes on when you set the lock lever automatic lock cancel switch to the Cancel position. It goes off when the lock lever automatic lock cancel switch is set to the normal position.

G0173861

Swing Lock Indicator

The swing lock indicator shows that the swing lock is activated.

ON: The swing lock is in operation.

It comes on when you set the swing lock switch to the ON (lock) position.

It flashes when you set the swing parking brake cancel switch to “Cancel” position.

REMARK

The disc brake that mechanically stops the rotation is installed in the swing motor.

G0209120

Aftertreatment Device Regeneration Indicator

⚠ CAUTION

- **During the aftertreatment devices regeneration, the exhaust gas temperature can become higher than the conventional models. Do not go near the exhaust pipe outlet to prevent burn injury. Do not let the flammable materials come near the exhaust pipe outlet to prevent a fire.**
- **When there are thatched houses, dry leaves or pieces of paper near the jobsite, set the system to the regeneration disable setting. This is to prevent the danger of fire caused by hot exhaust that occurs during the aftertreatment devices regeneration.**

The aftertreatment devices regeneration indicator comes on during regeneration of the exhaust gas aftertreatment devices. It goes off when the regeneration is completed.

G0055352

Aftertreatment Device Regeneration Disable Indicator

The aftertreatment devices regeneration disable indicator comes on when the exhaust gas aftertreatment devices are set not to be regenerated.

REMARK

Even if the aftertreatment devices regeneration is disabled, when the manual stationary regeneration is necessary, the KDPF soot accumulation caution lamp comes on. If the KDPF soot accumulation caution lamp comes on, cancel the regeneration disable, and start the manual stationary regeneration.

G0055353

Power Maximizing Indicator

The power maximizing indicator shows if the one-touch power maximizing function is activated.

The indicator display by the operation of the lever switch on the work equipment control lever is as follows.

Indicator comes on: Power maximizing activates while you continue to push the lever switch (for a maximum of 8.5 seconds). When the power maximizing function is activated, the mode is shown in the center of the single camera image. The screen goes back to the standard screen after 2 seconds.

Indicator goes off: Power maximizing function is stopped.

For the lever switch function allocation, see “Lever Switch Assignment (3-58)”.

REMARK

Only when the working mode is P+, P, or E mode, the power increases while you push the lever switch. Even if you continue to push the lever switch, the power maximizing operation completes in 8.5 seconds.

G0209121

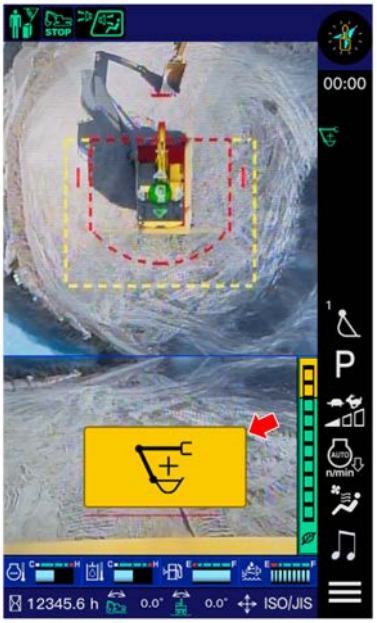

G0238549

Track Control Enabled Indicator

The track control enabled indicator comes on when the track control is enabled.

For the setting, see “Track Control (3-261)”.

G0238565

Quick Coupler Indicator

(if equipped)

The quick coupler indicator shows the state of the quick coupler.

The state of the quick coupler is as follows.

If Attachment Locking Sensor is set to “Without”

(A): The bucket or attachment is not released

(B): The bucket or attachment is released

(C): Waiting for lock confirmation

(D): Abnormal

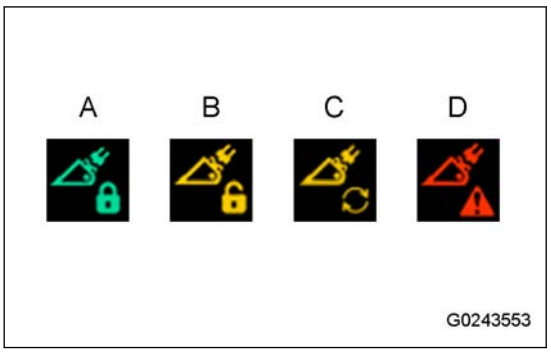

If Attachment Locking Sensor is set to “With (Lehnhoff)”

(A): Locked, and attachment engaged

(B): Unlocked, and attachment engaged

(C): Unlocked, and attachment disengaged

(D): Locked, and attachment disengaged

(E): In a check whether to continue the operation while the attachment is disengaged

(F): Abnormal

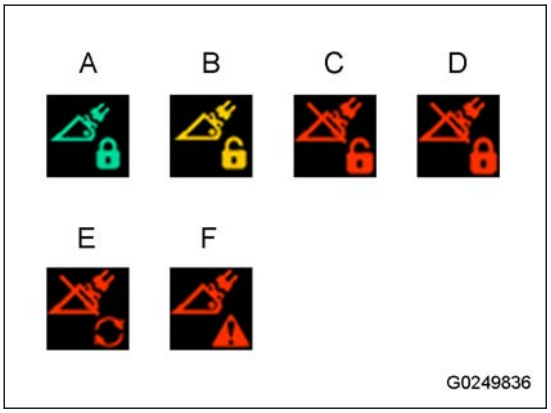

If Attachment Locking Sensor is set to “With (Rototilt)”

(A): Locked, and attachment engaged

(B): Unlocked

(C): Locked, and attachment disengaged

(D): In a check whether to continue the operation while the attachment is disengaged

(E): Abnormal

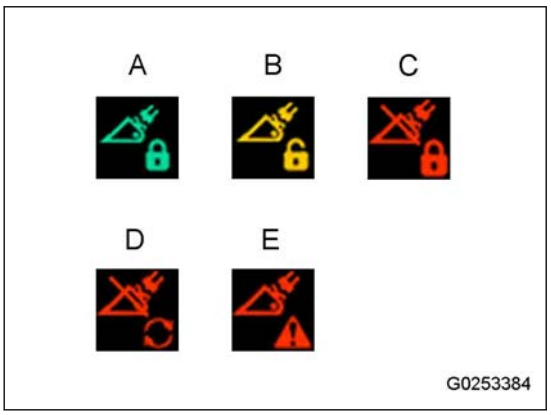

Pilot Display

The pilot display consists of the icons that show the operation state of each function.

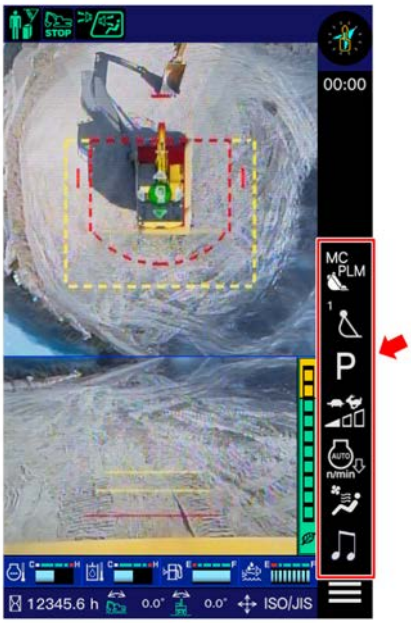

G0238550

2D Machine Control/Payload Meter Selector Icon

The state changes each time the icon is tapped.

(a): 2D machine control/payload meter is disabled

(b): 2D machine control is enabled

(c): Payload meter is enabled

(d): 2D machine control/payload meter is enabled

For the setting and operation methods, see “2D Machine Control (3-401)” and “Payload Meter Function (3-434)”.

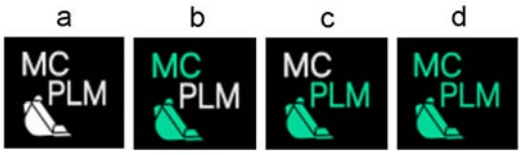

G0238566

Attachment Icon

The attachment icon shows the currently selected attachment.

This machine has an attachment setting function. Information such as the attachment's flow rate and dimensions can be registered to the machine.

After the attachment is replaced, select the attachment to be used on the machine monitor. The information about the attachment can be reflected on the machine.

For details of the attachment setting function, see “Attachment Setting (3-300)”.

G0210270

NOTICE

Be sure to set the attachment setting to the breaker when you do breaker work. If you do a breaker work while the attachment setting is not in the breaker setting, hydraulic component can be damaged.

Working Mode Icon

The working mode icon shows the currently set working mode.

The working mode icon is shown as follows.

P+: P+ mode (for heavier duty operations)

P: P mode (for heavy duty operations)

E: E mode (for operations with emphasis on fuel consumption)

L: L mode (for fine control operations)

For the working mode setting, see “How to Operate Work Mode (3-271)”.

REMARK

- When the E mode is selected, E0 to E3 are shown.
- The attachment circuit does not operate in the L mode.

Travel Speed Icon

The travel speed icon shows the set mode of the travel speed.

The travel speed icons are as follows.

(A): Low speed travel (Lo)

(B): Middle speed travel (Mi)

(C): High speed travel (Hi)

For details and changing method of the travel speed, see “How to Change Travel Speed (3-267)”.

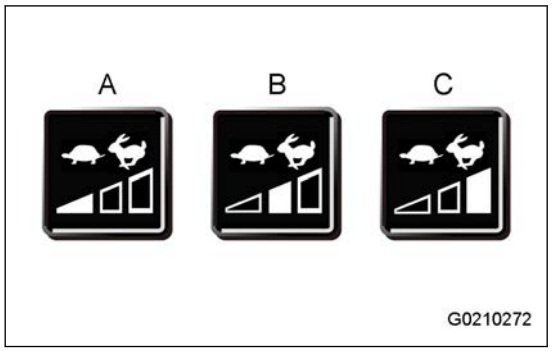

Auto-Deceleration Icon

The auto-deceleration icon shows the setting state of the auto-deceleration function.

Green display: Auto-deceleration function is ON

White display: Auto-deceleration function is OFF

ON or OFF of the auto-deceleration function can be selected each time you tap the auto-deceleration icon.

When the auto-deceleration function is set to ON, the auto-deceleration icon is highlighted in yellow for a specified time.

For details of auto-deceleration function, see “Auto-Deceleration Function (3-272)”.

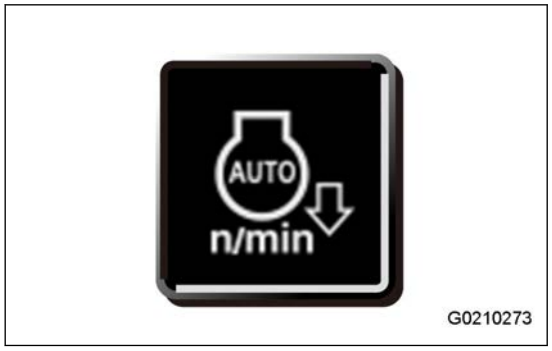

REMARK

- The auto-deceleration icon is not shown before the engine starts. The preheating icon is shown at the position of the auto-deceleration icon.
- When the working mode is set to the L mode, auto-deceleration is automatically set to OFF. When you use the auto-deceleration function, set auto-deceleration to ON.

Preheating Icon

The preheating icon is shown before you start the engine.

During preheating, the preheating icon is highlighted in yellow.

It goes off when the preheating is completed.

The maximum preheating time is approximately 30 seconds.

For the automatic preheating, see “How to Start Engine (3-233)”.

For the manual preheating, see “How to Do Manual Preheating When You Start Engine (3-235)”.

REMARK

The preheating icon is not shown after the engine starts. The auto-deceleration icon is shown at the preheating icon position.

Air Conditioner Icon

The air conditioner icon shows the operation state of the air conditioner.

Green display: Air conditioner ON

White display: Air conditioner OFF

For how to use the air conditioner, see “Handle Air Conditioner (3-325)”.

Audio Icon

The audio icon shows the operating state of the radio sound system.

Icon (1) shown in white: Audio is not played.

Icon (1) shown in green: Audio is played.

Icon (2) shown in green: Incoming call, outgoing call, or talking.

For details about the radio sound system, see “Handle Radio Sound System (3-334)”.

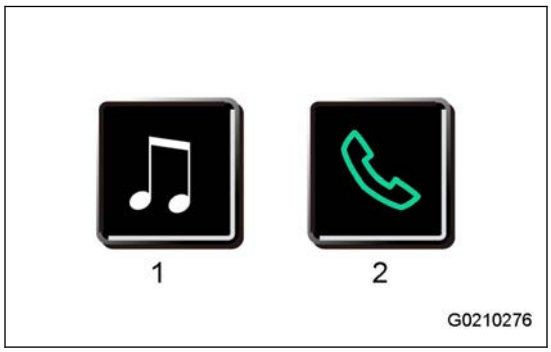

Bird's Eye View Icon

WARNING

Use the screen on the machine monitor as an aid. See directly around the machine to secure safety before you start the work.

The bird's-eye view icon shows the states of the 4 functions related to the upper structure.

- Travel heading indicator
- Rollover avoidance
- Swing angle limit function
- Swing to angle

For the swing angle limit function, see "2D Boundary Control (3-370)".

For "swing to angle", see "Swing to Angle (3-394)".

G0238551

Travel Heading Indicator

The machine monitor shows the direction of movement of the machine when a forward or reverse travel operation is made.

Look at the travel heading indicator before the machine travels to prevent incorrect selections of the travel direction.

The upper structure icon (1) shows the direction of the upper structure.

The travel direction icon (2) shows the direction of the track frame with respect to the upper structure icon (1). When you make a forward travel operation, the machine moves in the direction shown by the arrow.

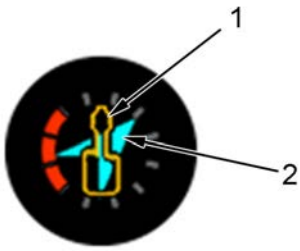

G0238552

The color of the travel direction icon (2) is shown as follows.

Green: The track frame points toward the front of the set angle.

Yellow: The track frame points toward the rear of the set angle. Move the machine carefully.

For how to set the swing angle at which the color of the travel direction icon changes, see "How to Set Travel Heading Indicator (3-44)".

How to Set Travel Heading Indicator

You can set the swing angle at which the color of the travel direction icon of the travel heading indicator changes.

The settings are stored for each operator ID. The same settings are taken over the next time the same operator logs on.

1. Tap the bird's-eye view icon to show “Feature selection” screen.

G0238551

2. Tap “Travel Heading Indicator Angle” (1).

G0228736

3. Tap the angle input field (2).

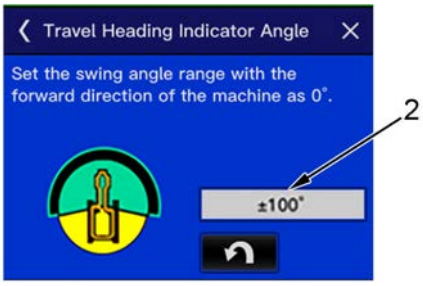

G0228737

4. Input an angle between 0° and 180°. Tap “OK” button.

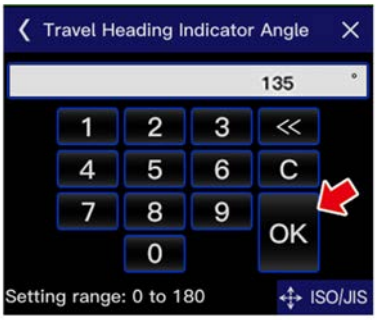

G0228738

Rollover Avoidance

(If equipped)

WARNING

- **Before you use the rollover avoidance function, read this manual to understand the precautions and handling procedures required.**
- **The operator is responsible for the operation of the machine.**
- **This is not a function that can prevent rollovers in all circumstances. There are limitations to its performance.**
- **The rollover avoidance function is not designed to prevent operator carelessness. This includes inattentive or distracted operation.**
- **Obey all safety rules and regulations when operating the machine.**
- **The operator must always be aware of the condition of the machine and surroundings and operate the machine in accordance with the current conditions.**
- **Do not rely exclusively on the rollover avoidance system to avoid rollover during operation. This can result in serious injury or death.**

The rollover avoidance function highlights areas where there is a danger of rollover. It also activates an alarm when the rollover danger level increases.

The upper structure icon (1) shows the direction of the upper structure.

The travel direction icon (2) shows the direction of the track frame with respect to the upper structure icon (1).

The rollover danger level display (3) shows the danger level of rollover in the back, forth, right, and left directions of the track frame.

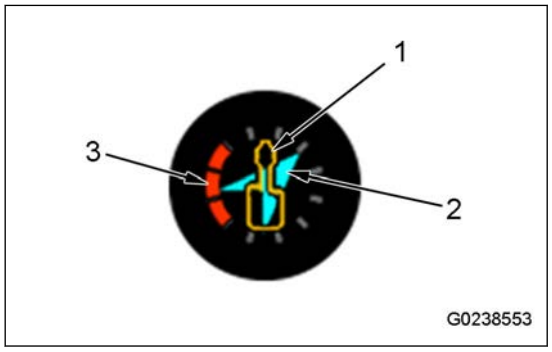

The rollover danger level display (3) uses 3 colors to identify different levels of rollover danger.

Black: The danger of rollover is relatively low in this area.

Yellow: This indicates a caution area where there is a danger of rollover that requires additional caution. Do not operate the machine suddenly if a caution area is shown.

Red: This indicates a warning area where there is significant danger of rollover. If a warning area is shown, do not move the center of gravity more into that area. If the warning area is shown for 1 second or more, the buzzer sounds. Look at the bird's-eye view icon. Examine the warning area. Operate the machine carefully in accordance with current conditions.

How to Set Rollover Avoidance

You can turn the rollover avoidance on or off.

The settings are stored for each operator ID. The same settings are taken over the next time the same operator logs on.

1. Tap the bird's-eye view icon to show “Feature selection” screen.

G0238551

2. Tap “Rollover Avoidance” (4) to change ON/OFF state of the rollover avoidance.

   ON: The rollover danger level display (3) is shown. The buzzer operates in conjunction.

   OFF: The rollover danger level display (3) is not shown. The buzzer does not operate.

G0228739

Meter Display

The engine coolant temperature gauge, hydraulic oil temperature gauge, fuel gauge, and DEF level gauge are shown.

Hold down the meter display to zoom the meter display.

When you tap the HOME button while the meter display is zoomed, the screen goes back to the standard screen.

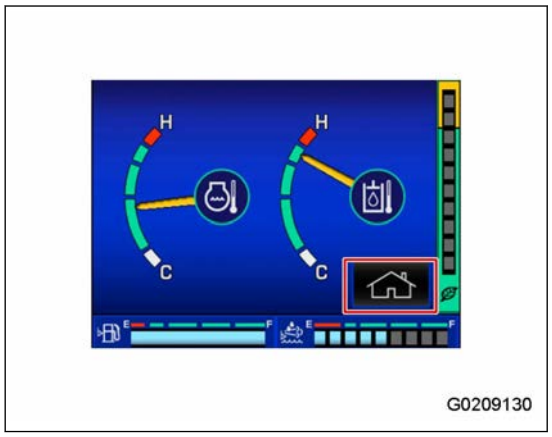

Engine Coolant Temperature Gauge

The engine coolant temperature gauge shows the engine coolant temperature.

If the gauge or pointer is in the green range during the operation, it is correct. If the gauge or pointer exceeds the red range (A) during the operation, the overheat prevention system is activated.

(A) to (B): Shows the red range.

(A) to (C): Shows the green range.

(C) to (D): Shows the white range.

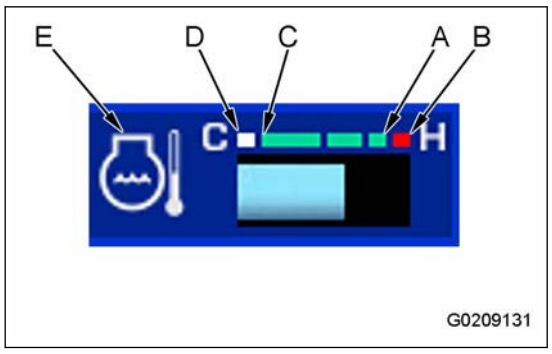

The overheat prevention system operates as follows.

Red range (A) position: The engine coolant temperature caution lamp (E) becomes a display at abnormal temperature.

Red range (B) position: The engine speed changes to the low idle, the engine coolant temperature caution lamp (E) becomes a display at abnormal temperature, and the alarm buzzer operates at the same time.

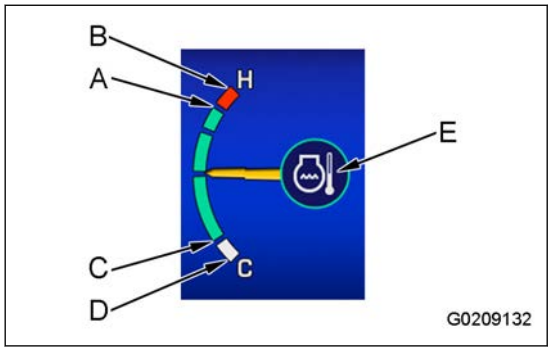

The overheat prevention system continues its operation until the pointer gets in the green range.

The engine coolant temperature caution lamp (E) shows the low temperature display when the gauge or pointer is at the position (D) when you start the engine.

In this case, do the warm-up operation.

Display (G) when temperature is low: The caution lamp background (K) is white.

Display (H) when temperature is correct: The caution lamp background (K) is blue.

Display (J) when temperature is abnormal: The caution lamp background (K) is red.

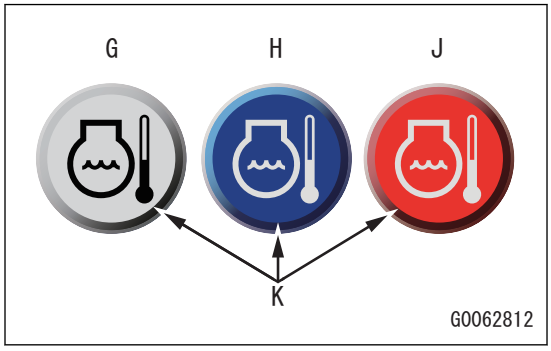

Hydraulic Oil Temperature Gauge

The hydraulic oil temperature gauge shows the hydraulic oil temperature.

If the gauge or pointer is in the green range during the operation, it is correct.

If the gauge or pointer is near the red range (A) during the operation, the hydraulic oil temperature is 102 ℃ {215.6 ℉} or more. Run the engine at low idle or stop the engine, and wait until the hydraulic oil temperature goes down.

(A) to (B): Shows the red range.

(A) to (C): Shows the green range.

(C) to (D): Shows the white range.

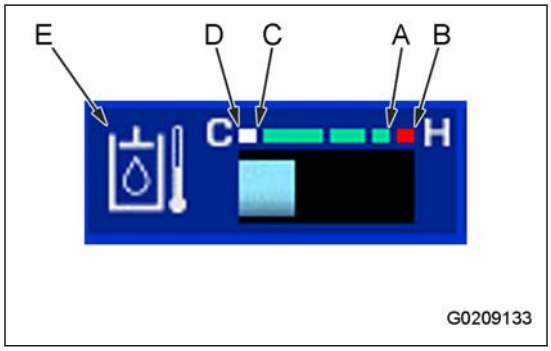

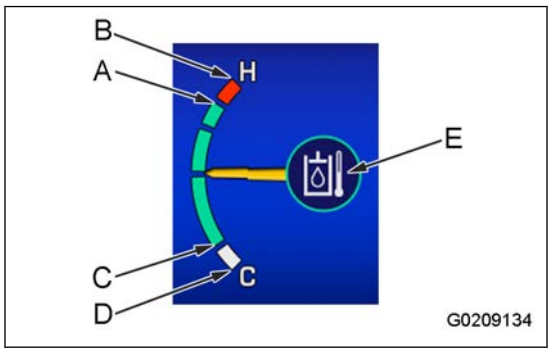

REMARK

Hydraulic oil temperature when the gauge or pointer is near the red range (A) is as follows.
Red range (A) position:102 ℃ {215.6 ℉} or more
Red range (B) position:105 ℃ {221 ℉} or more
When the gauge or pointer is in the red range ((A) to (B)), the hydraulic oil temperature caution lamp (E) shows the display at abnormal temperature.
When the engine is started, if the gauge or pointer is in the (D) position, the hydraulic oil temperature is 15 ℃ {59 ℉} or below, and the hydraulic oil temperature caution lamp (E) shows the low temperature display. In this case, do the warm-up operation.

Display (G) when temperature is low: The caution lamp background (K) is white.

Display (H) when temperature is correct: The caution lamp background (K) is blue.

Display (J) when temperature is abnormal: The caution lamp background (K) is red.

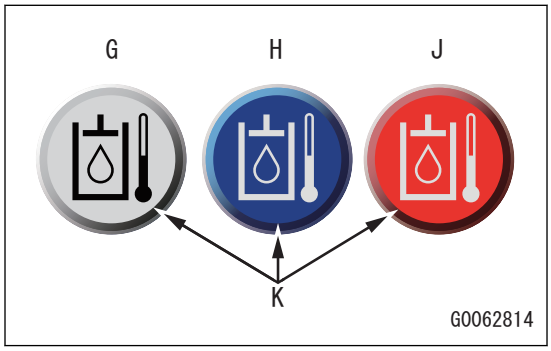

Fuel Gauge

The fuel gauge shows the quantity of fuel in the fuel tank.

When the gauge is in the green range during the operation, it is correct.

When the gauge comes to the red range (A) during operation, the remaining fuel is 61 ℓ {16.1 US gal} or less, so examine and add fuel.

(A) to (B): Shows the red range.

(A) to (C): Shows the green range.

REMARK

When the gauge reaches the red range (B), the remaining fuel is 45 ℓ {11.9 US gal} or below.
If the gauge is in the red range (B), the fuel level caution lamp (D) comes on in red.

The gauge cannot show the correct position for a while after the starting switch is turned to the ON position. It is not a problem.

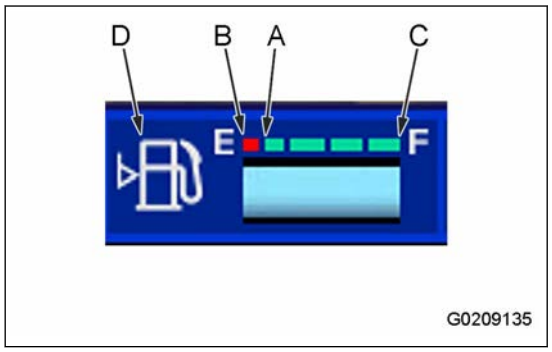

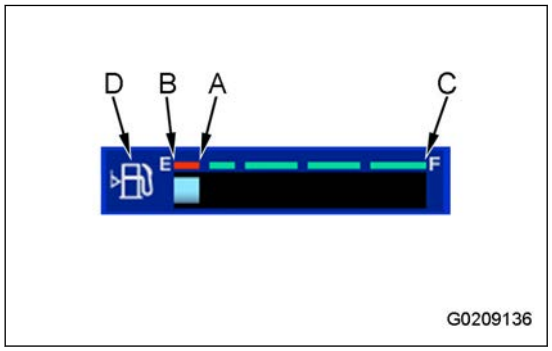

DEF Level Gauge

The DEF level gauge shows the remaining level of DEF.

If the gauge is in the green range during the operation, it is correct.

If the gauge is near the red range (A) during the operation, examine the DEF level and add DEF.

(A) to (B): Shows the red range.

(A) to (C): Shows the green range.

If the gauge is in the red range (A) to (B), the DEF level caution lamp (D) comes on in red.

If the level is lowered more after the lamp is on in red, the engine output or the engine speed is restricted.

If the remaining DEF level cannot be sensed, the DEF level caution lamp (D) comes on in yellow.

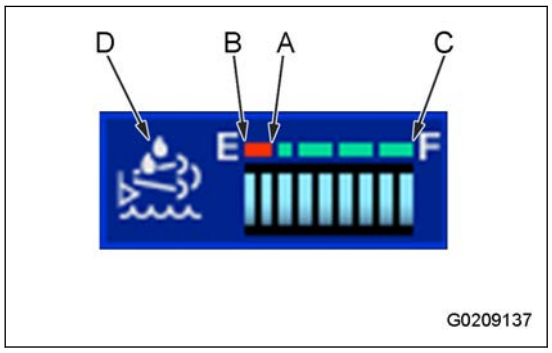

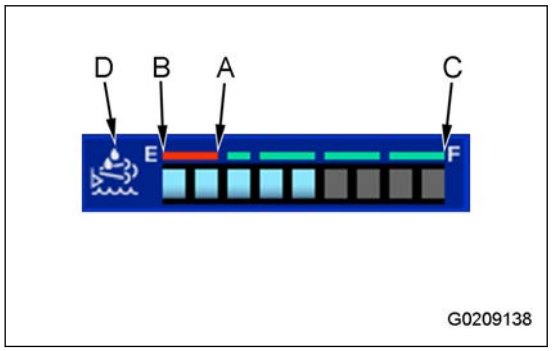

REMARK

- The DEF level caution lamp (D) comes on in yellow immediately after you turn the starting switch to the ON position or during the engine start-up operation, this is not a problem.
- In cold weather, DEF level cannot be sensed and the DEF level caution lamp (D) comes on in yellow for approximately 1 hour, but this is not a problem.
- Even if the DEF level caution lamp (D) does not come on in yellow, it possibly needs a long time for the DEF level gauge to show the correct level.
  If the states that follow are found, it is not a problem.
  - When you add the DEF while the starting switch is kept in the ON position
  - When you turn the starting switch to the ON position just after you add the DEF (in approximately 30 seconds)

  Add DEF after you turn the starting switch to the OFF position. Wait for a while, and then turn the starting switch to the ON position.

User Menu

When you tap the menu icon, the user menu screen for each setting of the machine is shown on the machine monitor display.

The user menu is shown only when the lock lever is set to the LOCK position.

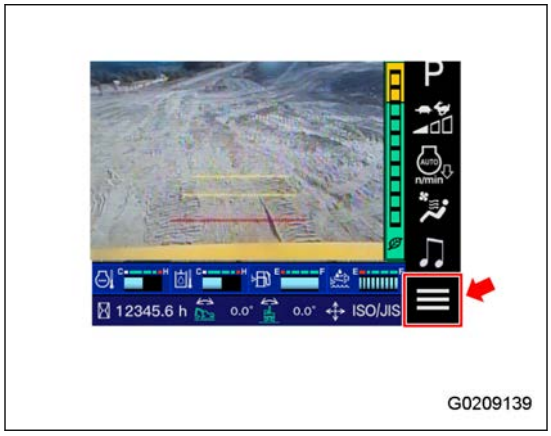

User Menu List

There are items that follow in the user menu. Tap the tabs (a) to (h) to change the menu screen.

(a): Energy Saving Guidance

(b): Machine Setting

(c): Adjustment

(d): Aftertreatment Device Regeneration

(e): SCR Information

(f): Maintenance

(g): Operator and Monitor Setting

(h): Display Message

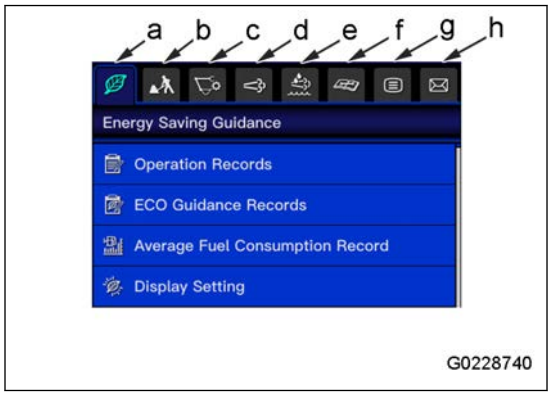

These menus (a) to (h) are used to set and examine the items as follows.

For operation of each menu, see the pages on which each item is explained.

REMARK

If some remedy is required, the menu icon can be highlighted in red, yellow, or green.
At this time, the menu that requires a remedy is shown when the menu icon is tapped.
Also, red, yellow, and green circles are shown on the items or the tab containing items that require a remedy to urge for the remedy.

If the menu icon is highlighted in red

A problem occurred in the urea SCR system, KDPF, or work equipment control lever, or the time for maintenance goes by.

Tap the menu icon to see the content of the problem. Do the required remedies. For details, see “Handle Urea SCR System Warning (3-183)”, “Handle Komatsu Diesel Particulate Filter (KDPF) (3-172)”, “Lever Switch Assignment (3-58)”, and “Maintenance (3-88)”.

If the menu icon is highlighted in yellow

A problem occurs in the urea SCR system or the KDPF. If not, the time for maintenance is near.

Tap the menu icon to see the content of the problem. Do the required steps. For details, see “Handle Urea SCR System Warning (3-183)”, “Handle Komatsu Diesel Particulate Filter (KDPF) (3-172)”, and “Maintenance (3-88)”.

If the menu icon is highlighted in green

There is an unread KOMTRAX message, or regeneration of the KDPF is recommended.

Tap the menu icon to see the content of the problem. Do the required remedies. For details, see “Message Display (3-114)” and “Handle Komatsu Diesel Particulate Filter (KDPF) (3-172)”.

User Menu Contents

User Menu List 3-51
Energy Saving Guidance 3-53
- See Operation Records 3-53
- Examine ECO Guidance Record 3-53
- Read Fuel Consumption Record 3-54
- Change Display Setting 3-55

Machine Setting 3-57
- Lever Switch Assignment 3-58
- Joystick Pattern Selection 3-63
- Cab Interference Prevention Setting 3-64
- Auto Idle Stop Time Setting 3-65
- Delayed Engine Shutdown Setting 3-65
- Auto Power Off Time Setting 3-66
- Machine Warm-up Setting 3-66
- Remote Courtesy Lights Setting 3-67
- Extension Arm Setting 3-67
- Working Mode at Startup Setting 3-70

Adjustment 3-70
- Speed Adjustment 3-71
- Adjustable Priority 3-71
- Response Adjustment 3-72
- Economy Mode Adjustment 3-72
- Payload Meter Calibration 3-73
- Adjust Auto Tilt Bucket Control 3-80

Aftertreatment Device Regeneration 3-88
SCR Information 3-88
Maintenance 3-88
- Object Avoidance Test 3-89
- Current Abnormality 3-90
- Maintenance Item Screen Setting 3-91
- Maintenance Record Check 3-92

Operator and Monitor Setting 3-93
- Monitoring 3-93
- Brightness Adjustment 3-95
- Video Quality Adjustment 3-97
- Clock Adjustment 3-99
- Language Settings 3-101
- Camera Position at Startup 3-102
- Unit Selection 3-103
- Operator Authentication Setting 3-103
- Supervisor Setting 3-110
- Log Off 3-113

Message Display 3-114

Energy Saving Guidance

Each item of “Energy Saving Guidance” menu (a) shows and sets the notification related to energy saving.

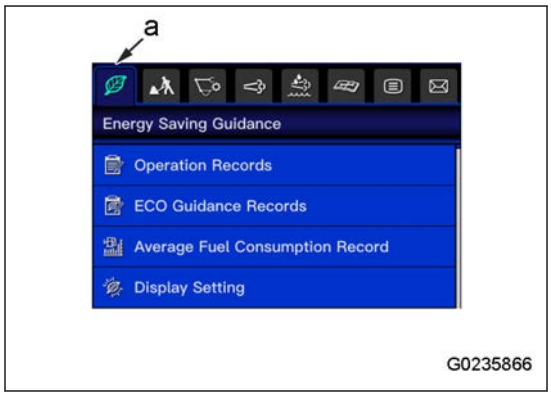

See Operation Records

Tap “Energy Saving Guidance” > “Operation Records”, and the screen shown in the figure is shown.

“Working Hours (Engine On)”, “Average Fuel Consumption”, “Actual Working Hours”, “Actual Average Fuel Consumption”, “Fuel Consumption”, “Idling Hours”, “Economy Mode Ratio” on a 1-day basis or on split time measurement period basis is shown.

Examine ECO Guidance Record

Tap “Energy Saving Guidance” > “ECO Guidance Records”, and the screen shown in the figure is shown.

The frequency of the ECO guidance display on a 1-day basis or on split time measurement period basis is shown.

REMARK

The ECO guidance shows the guidance display for energy saving operation. This display can be shown on the standard screen during travel.
For the display of the ECO guidance, see “ECO Guidance (3-118)”.

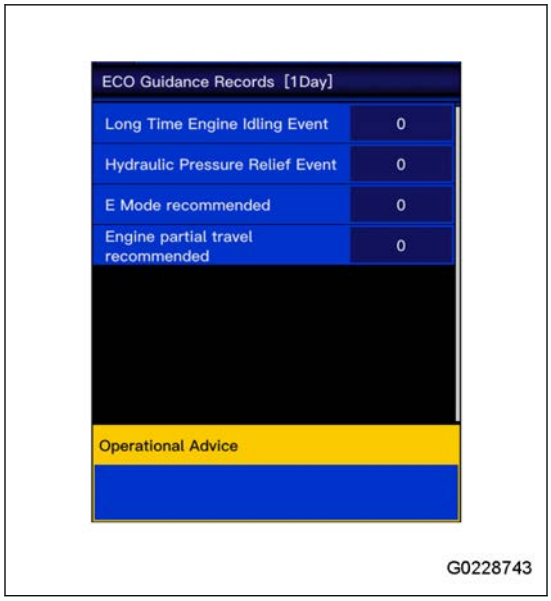

Read Fuel Consumption Record

Tap “Energy Saving Guidance” > “Average Fuel Consumption Record”, and the screen shown in the figure is shown.

The graph of every 1 hour average fuel consumption during the last 12 hours or the graph of daily fuel consumption during the last 7 days are shown.

REMARK

The shown values of the fuel consumption and average fuel consumption can be different from the actual values by the machine work conditions (fuel, weather, or work contents, or such).

G0235867

Change Shown Graph

Tap the selector button (1) to change the shown graph.

REMARK

There are 2 types of graphs which can be shown, one shows every 1-hour average fuel consumption during last 12 hours and the other shows the daily average fuel consumption during last 7 days.

Delete Fuel Consumption Record

1. When you tap the CLEAR button (2), the confirmation screen in the figure is shown.
2. When you tap the checkmark button, the graph data of last 12 hours and last 7 days are deleted, and the screen goes back to the average fuel consumption record screen.

REMARK

Tap the RETURN button to cancel the data deletion (CLEAR).

G0228745

Change Display Setting

Tap “Energy Saving Guidance” > “Display Setting”, and the screen shown in the figure is shown.

In the “Display Setting” menu, you can do these operations:

- Set Display of Fuel Consumption Gauge
- Change display/non-display of ECO Gauge Display
- Setting of ECO Gauge Display Fuel Target Value
- Change display/non-display of ECO Guidance Display
- Change display/non-display of guidance display at shut-down

G0235868

Setting of Average Fuel Consumption Display

You can change the setting of the fuel consumption display shown on the standard screen.

G0209147

1. Tap “Energy Saving Guidance” > “Display Setting” > “Ave Fuel Consumption Display”, and the screen shown in the figure is shown.
   - “1 Day”
     Shows the average fuel consumption from 0:00 A.M. of the day to 0:00 A.M. of the next day.
   - “Split Time”
     Shows the average fuel consumption during the Split Time measurement period.
     Select “Split Time” to start the automatic measurement of fuel consumption.
   - “None”
     The fuel consumption gauge is not shown.

G0228747

REMARK

When you select Split Time measurement, the measurement stop switch (STOP) is shown on the Operation Records screen and ECO Guidance Records screen.
When you stop the measurement, move the screen display from the Energy Saving Guidance menu (a) to Operation Records or ECO Guidance Records, and then tap the measurement stop switch (STOP).

G0209150

Change Display/Non-Display of ECO Gauge

Tap “Energy Saving Guidance” > “Display Setting” > “ECO Gauge Display” to change the display/non-display setting of the ECO gauge on the standard screen.

ON: ECO Gauge is shown.

OFF: ECO Gauge is not shown.

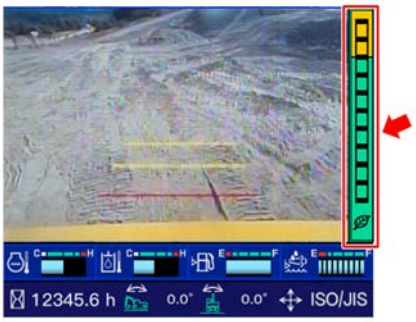

G0210278

Set Target Fuel Consumption Value on ECO Gauge

You can change the target fuel consumption value (the upper limit value of the green range) of the ECO gauge.

1. Tap “Energy Saving Guidance” > “Display Setting” > “ECO Gauge Display Fuel Target”, and the screen shown in the figure is shown.
2. Input the fuel consumption target value and tap OK button.

   REMARK

   When “ECO Gauge Display” is off, “ECO Gauge Display Fuel Target” cannot be set.

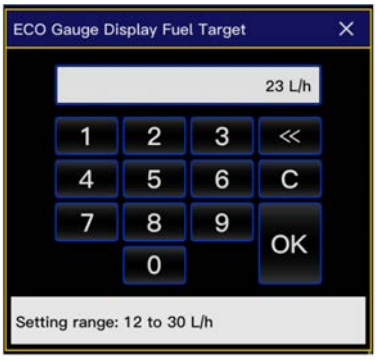

G0228748

Switch Display/Non-Display of Eco Guidance

Tap “Energy Saving Guidance” > “Display Setting” > “ECO Guidance Display” to change the display/non-display setting of the ECO guidance on the standard screen.

ON: ECO guidance is shown.

OFF: ECO guidance is not shown.

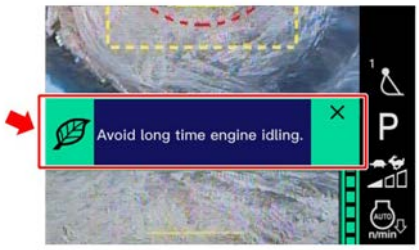

G0228749

Change Display/Non-Display of ECO Guidance Display at Key OFF

Tap “Energy Saving Guidance” > “Display Setting” > “ECO Guidance Display at Key OFF” to change the display/non-display setting of the guidance at shutdown.

ON: Show guidance display at shutdown.

OFF: Hide guidance display at shutdown.

REMARK

When “ECO Guidance Display” is off, “ECO Guidance Display at Key OFF” cannot be set.

Machine Setting

You can change machine settings with each item in the “Machine Setting” menu (b).

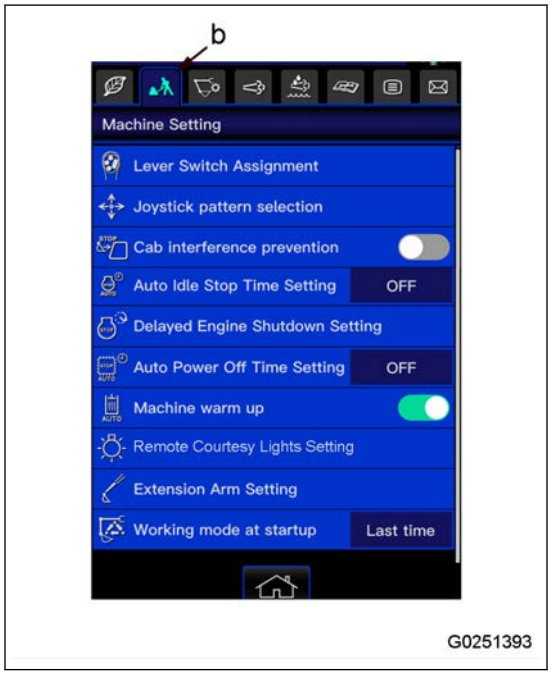

Lever Switch Assignment

You can change the allocation of the work equipment lever switches by operation on the machine monitor.

Lever switch allocation settings are stored for each operator ID. If the lever switch allocations are changed, the changed settings are taken over the next time the same operator logs on.

The function assignments are as follows. However, in some cases, the list cannot show all the functions, or the list can show the functions that are not available because of the conditions such as installation of optional equipment.

REMARK

- For machines with 3D machine control, Lever Switch Assignment cannot be set on the machine monitor. Do Lever Switch Assignment on the ICT monitor.
  For how to change the lever switch allocation on the ICT monitor, see “How to Change Lever Switch Assignment Setting” in the 3D Machine Control Operation and Maintenance Manual.
- If a failure is sensed in the work equipment lever switch, you must turn the starting switch to the OFF position to change the lever switch assignment. You cannot change the assignment until the starting switch is turned to the OFF position.
  If the action level “L03” is shown, stop the operation immediately and move the machine to a safe area. Then, consult your Komatsu distributor for the inspection and maintenance.

Functions that can be Allocated to Work Equipment Lever Switches

Category	Function name	Explanation
General	Camera Image Select	Changes the display of the single camera image on the machine monitor. For the change of single camera image, see “Single Camera Image (3-347)”.
	Front Wiper	Operates the windshield wiper at the front window glass. For the operation of the windshield wiper, see “Wiper Switch (3-132)”.
	Front Washer	Operates the window washer for the front window glass. For the operation of the window washer, see “Window Washer Switch (3-131)”.
	Auto-Deceleration	Turns the auto-deceleration function on or off. For how to change over the auto-deceleration function, see “Auto-Deceleration Icon (3-42)”.
	Working Mode Switch	Changes the working mode. For how to change the working mode, see “How to Operate Work Mode (3-271)”.
	Mute	Turns the mute function for the audio, guidance, and buzzer sound on or off. For how to operate the mute function, see “Mute Switch (3-136)”.
	Answer phone	Answers to an incoming phone call. For the setting for incoming phone calls, see “How to Use Telephone (3-337)”.
	Power Maximizing	Activates the Power Maximizing function. For how to operate the Power Maximizing function, see “How to Use One-Touch Power Maximizing Function (3-272)”.
Attachment	Breaker	Operates the breaker. For how to operate the breaker, see “Attachments and Options (6-1)”.

Category	Function name	Explanation
Payload meter	Truck list enter (machine monitor)	Selects the truck at the cursor position on the payload meter truck list screen on the machine monitor. For details, see “How to Use Payload Meter Function (3-434)”.
	Payload Start/Stop	Changes payload start and stop of the payload meter function. For details, see “How to Use Payload Meter Function (3-434)”.
	Payload Complete	Registers completed payloads of the payload meter function. For details, see “How to Use Payload Meter Function (3-434)”.
Machine control	Auto/Manual	Changes the auto/manual setting of the machine control and automatic functions. For the procedure to change the mode, see “How to Switch to Manual Mode (3-422)”, or “How to Switch to Manual Mode” in the Operation and Maintenance Manual for 3D Machine Control.
	Offset Up	Offsets the design surface to up. For the offset up method, see “Elevation Adjust Range (3-410)”, or “Surface Offset Menu Setting Contents” in the Operation and Maintenance Manual for 3D Machine Control.
	Offset Down	Offsets the design surface to down. For the offset down method, see “Elevation Adjust Range (3-410)”, or “Surface Offset Menu Setting Contents” in the Operation and Maintenance Manual for 3D Machine Control.
	Attachment angle hold temporary cancel	Cancels the attachment angle hold function temporarily. For the method, see “Explanation of Function of Semi-Auto Mode (3-423)”, or “Explanation of Function of Semi-Auto Mode” in the Operation and Maintenance Manual for 3D Machine Control.
	Benchmark Setting	Changes ON/OFF of the benchmark setting with the 2D machine control. For details, see “Target Design Surface (3-407)”.
	Touchpoint	Goes to the touchpoint screen, and enters the screen with the 2D machine control. For the method of operation, see “Touchpoint (3-408)”.
	Surface update(Laser) (if equipped)	Update the design surface for the 2D laser in the 2D machine control. For the method of operation, see “Laser Benchmark (3-411)”.

Functions that can be Allocated to Work Equipment Lever Wheels

Category	Function name	Explanation
General	Track Control Forward/ Reverse	Replaces the travel lever, and the machine travels straight. For details, see “Track Control (3-261)”.
	Track Control Steering	Replaces the travel lever, and changes the travel direction of the machine. For details, see “Track Control (3-261)”.
	Audio Volume	Adjusts the volume of the radio sound system. For how to adjust sound volume, see “Volume Control (3-340)”.
	Audio Tune/Select	Adjusts the AM/FM radio frequency or moves tracks in Bluetooth® audio. For how to adjust the AM/FM radio frequency and move between tracks in Bluetooth® audio, see “How to Listen AM/FM Radio (3-335)” and “How to Play Music with Bluetooth® Connected (3-336)”.

Category	Function name	Explanation
Attachment	Attachment 1	Operates the attachment. For how to operate the attachment, see “Attachments and Options (6-1)”.
	Attachment 2	Operates the attachment. For how to operate the attachment, see “Attachments and Options (6-1)”.
Payload meter	Truck list select (machine monitor)	On the machine monitor, the cursor on the payload meter truck list screen moves. For details, see “How to Use Payload Meter Function (3-434)”.

The Bluetooth® word mark and logos are registered trademarks and proprietary to Bluetooth SIG, Inc.

KOMATSU Group uses these mark and logos under license. Other trademarks and trade names are those of each owner.

How to Change Lever Switch Assignment Setting

When the 3D machine control application is started on the ICT monitor, the lever switch assignment cannot be done on the machine monitor.

Close the application or set it on the ICT monitor.

1. Tap “Machine Setting” > “Lever Switch Assignment”, and the screen shown in the figure is shown.
2. Examine the precautions, and tap the checkmark button.

   REMARK

   It is not possible to go back from the setting screen until the lever switch allocation is completed or the lock lever is released.

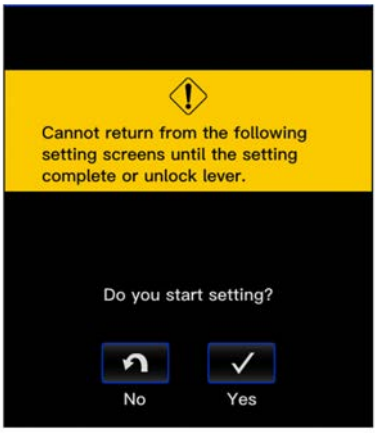

G0228752

3. Tap the switch or wheel to change the allocation in the lever switch allocation lists (A).

   REMARK

   - You cannot change the switch allocation of the horn and the temporary control cancel function.
   - While you allocate lever switches, functions other than the horn and temporary control cancel are disabled.

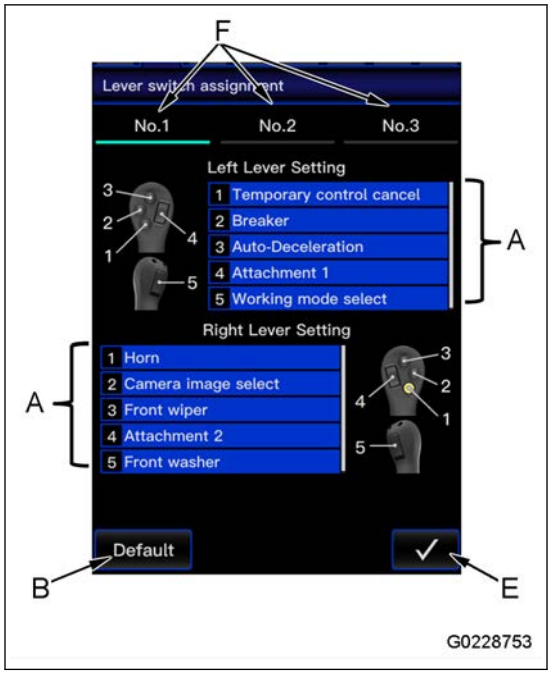

4. Select the classification (C) of the function to be allocated to the selected switch or wheel.

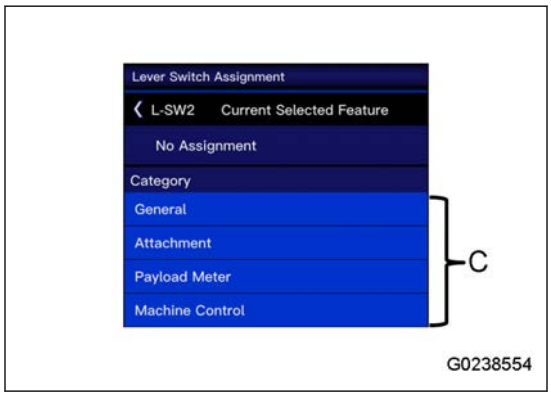

5. Tap the function (D) to be allocated.

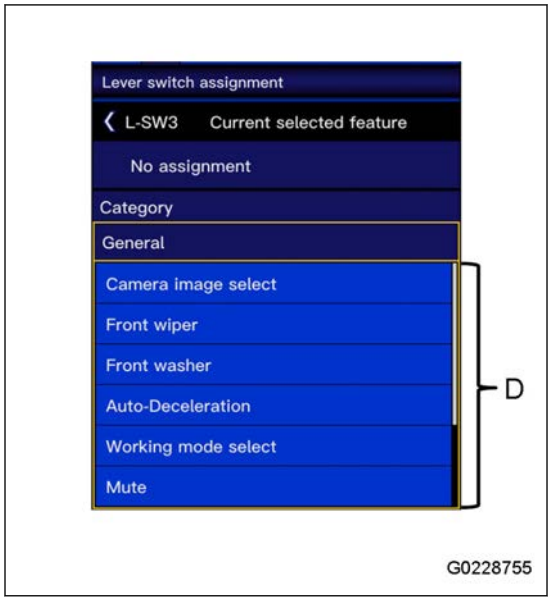

6. The frame of a switch or wheel with reallocation is highlighted in green. When all the settings are completed, tap the checkmark button (E). Lever switch assignment confirmation screen is shown.

NOTICE

“Track Control Steering” which can be allocated to “Left Lever Setting”, No.4 and “Track Control Forward/Reverse” which can be allocated to “Right Lever Setting”, No.4 must be allocated as a set.
When only “Track Control Steering” or “Track Control Forward/Reverse” is selected, the lever switch assignment setting cannot be entered.

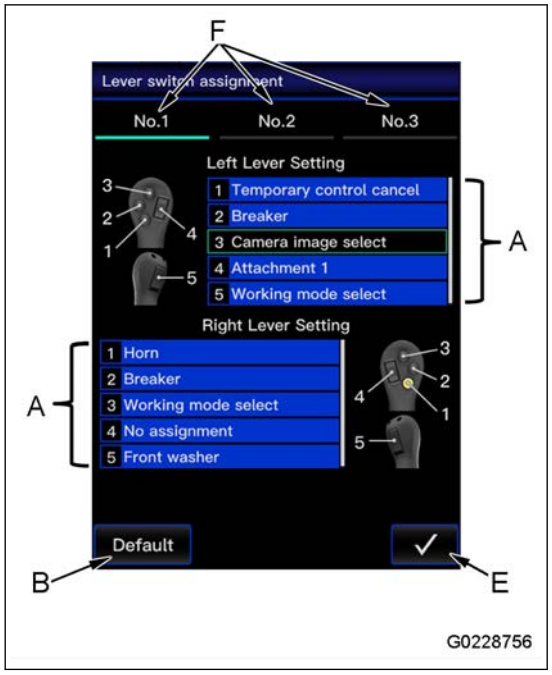

7. Examine the setting. Push the switch (1) of the left work equipment control lever to reflect the setting.

NOTICE

Make sure there are no changes not intended in the setting before you push the switch (1), and then do the operation.

8. Tap the checkmark button or wait for 3 seconds until the screen goes back to the Machine Setting screen.

You can save up to 3 settings of lever switch allocations to the preset tabs (F). You can change “Lever switch assignment” easily after you set switch allocations that suit different work situations.
When “Track Control Steering” and “Track Control Forward/Reverse” are assigned, the display is highlighted in yellow.

REMARK

You can use the Default button (B) to initialize the contents of the selected preset tab to the factory default.

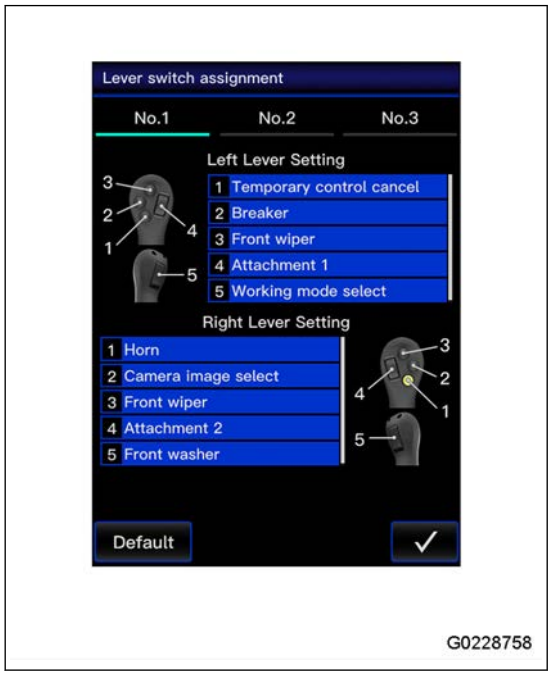

Joystick Pattern Selection

You can operate the machine monitor to change the operation pattern. The settings are stored for each operator ID. If the operation pattern is changed, the changed setting is taken over the next time the same operator logs on.

1. Tap “Machine Setting” > “Joystick pattern selection”, and the screen shown in the figure is shown.
2. Examine the precautions, and tap the checkmark button.

   REMARK

   It is not possible to go back from the setting screen until the operation pattern setting is completed or the lock lever is released.

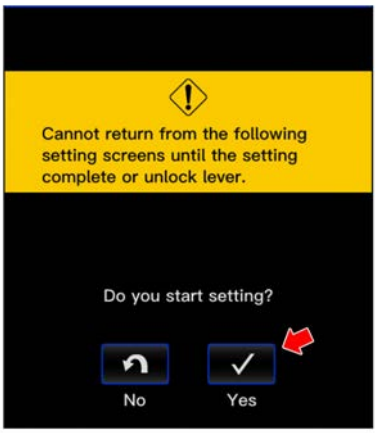

G0228759

3. Select the operation pattern to be set and tap the checkmark button.

   REMARK

   It is not possible to go back from the setting screen until the operation pattern setting is completed or the lock lever is released.

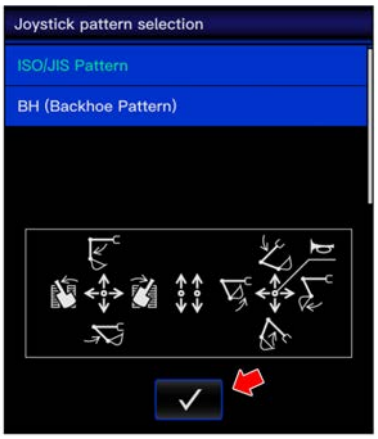

G0228760

4. Push the switch (1) on the left work equipment control lever to reflect the changes.

   REMARK

   It is not possible to go back from the setting screen until the operation pattern setting is completed or the lock lever is released.

G0228757

5. Tap the checkmark button or wait for 3 seconds until the screen goes back to the Machine Setting screen.

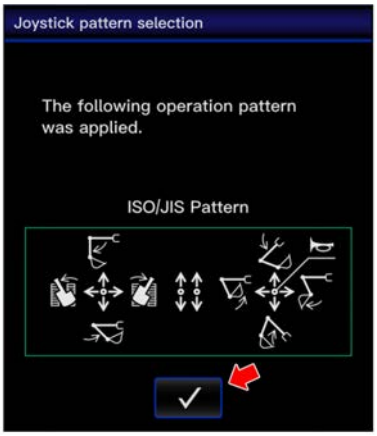

G0228761

REMARK

The currently selected operation pattern is shown on the lever pattern display of the machine monitor.

G0210321

If a problem is found in the lever pattern setting, the icon flashes in red and the operation pattern is not shown. In that case, turn the starting switch back to the OFF position (A). Wait until the machine monitor goes off, and then operate the starting switch again.

G0210322

Cab Interference Prevention Setting

You can set ON/OFF of cab interference prevention.

For cab interference prevention, see “Cab Interference Prevention (3-389)”.

Tap “Machine Setting” > “Cab interference prevention” to change ON/OFF of cab interference prevention.

ON: Prevents interference between the cab and work equipment.

OFF: Does not prevent interference between the cab and work equipment.

Auto Idle Stop Time Setting

You can set the auto idle stop function operation time.

For the auto idle stop function, see “Auto Idle Stop Function (3-273)”.

1. Tap “Machine Setting” > “Auto Idle Stop Time Setting”, and the screen shown in the figure is shown.
2. Select the setting time of the auto idle stop function.

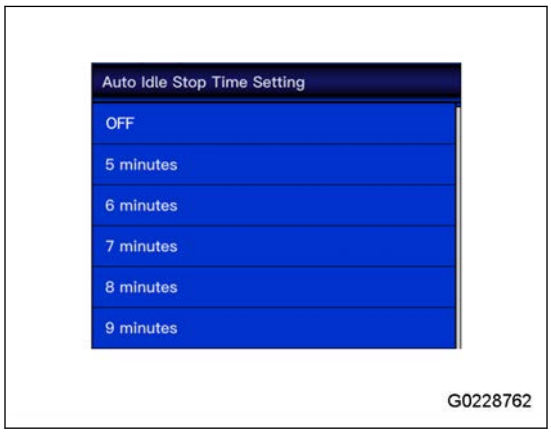

REMARK

- When you select “OFF”, the auto idle stop function is disabled.
- If the setting time of the auto idle stop function is shorter than the operation time of the delayed engine shutdown, the engine is stopped by the auto idle stop function while the delayed engine shutdown is in operation.
  For the delayed engine shutdown, see “Delayed Engine Shutdown System (3-252)”.

Delayed Engine Shutdown Setting

You can set the ON/OFF and actuation time of the delayed engine shutdown.

For the delayed engine shutdown, see “Delayed Engine Shutdown System (3-252)”.

1. Tap “Machine Setting” > “Delayed Engine Shutdown Setting”, and the screen shown in the figure is shown.

   .

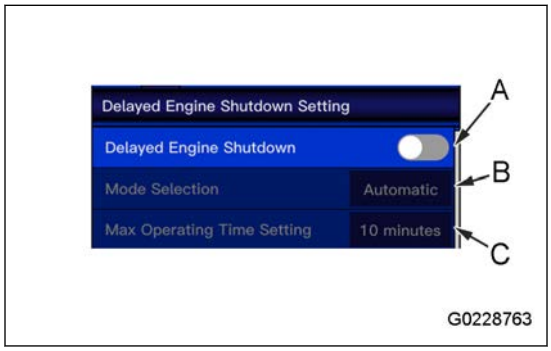

2. Tap “Delayed Engine Shutdown” (A) to change ON/OFF state of the engine delay shutdown.
3. Tap “Mode Selection” (B) and select the delayed engine shutdown mode.
   It cannot be selected when the delayed engine shutdown system is OFF.

   Auto: Automatically sets the idle time.

   Timer: Fixes the idle time to the set time.
4. Tap “Max Operating Time Setting” (C) and select the longest operating time of the engine delay shutdown.

   It can be selected only when the mode selection is auto.

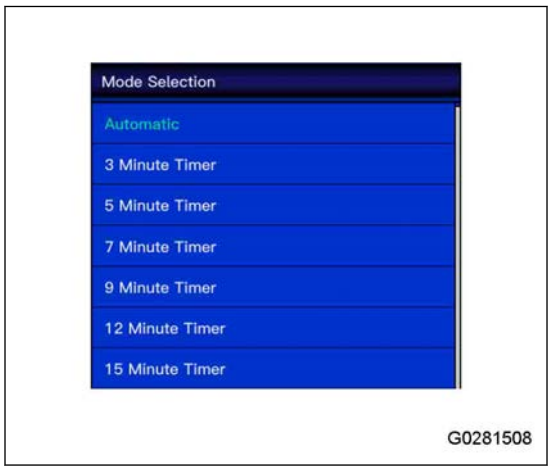

REMARK

- You cannot change items set by the supervisor.
- If the activation time of the delayed engine shutdown is longer than the set time of the auto idle stop function, the engine is stopped by the auto idle stop function during the activation of the delayed engine shutdown.

NOTICE

When you turn the battery disconnect switch to the OFF position for the first time after the setting, turn the starting switch to the OFF position. Make sure that the system operating lamp does not come on. Then, turn the battery disconnect switch key to the OFF position. If this is not done, the setting will possibly not be saved.

Auto Power Off Time Setting

You can set the auto power off operation time.

For details about the auto power off function, see “Auto Power Off (3-15)”.

1. Tap “Machine Setting” > “Auto Power Off Time Setting”, and the screen shown in the figure is shown.
2. Select the auto power off setting time.

   REMARK

   When you select “OFF”, the auto power off function does not activate.

   NOTICE

   When you turn the battery disconnect switch to the OFF position for the first time after the setting, turn the starting switch to the OFF position. Make sure that the system operating lamp does not come on. Then, turn the battery disconnect switch key to the OFF position. If this is not done, the setting will possibly not be saved.

G0228765

Machine Warm-up Setting

You can set the machine warm-up system to ON or OFF.

For the machine warm-up system, see “Machine Warm-up System (3-242)”.

Tap “Machine Setting” > “Machine warm-up” to change the ON/OFF state of the machine warm-up system.

ON: When the hydraulic oil temperature requires a warm-up, machine warm-up can be activated.

OFF: Machine warm-up cannot be activated.

Remote Courtesy Lights Setting

You can set the operation time of the light to be used in the remote courtesy lights.

For the remote courtesy lights function, see “Remote Courtesy Lights Function (3-368)”.

For the illumination of the lights when the cab door is unlocked, see “How to Open and Close Operator Cab Door Lock (3-297)”.

1. Tap “Machine Setting” > “Remote Courtesy Lights Setting”, and the screen shown in the figure is shown.
2. Tap lights (A) to (E) to select the activation time.
   Each light is as follows.

   (A): Room lamp

   (B): Working lamp (on cab)

   (C): Working lamp (work equipment, deck)

   (D): Additional working lamp

   (E): Cab door entry switch light (if equipped)

   REMARK

   If “OFF” is selected, the light does not come on by the remote courtesy lights.

   NOTICE

   When you turn the battery disconnect switch to the OFF position for the first time after the setting, turn the starting switch to the OFF position. Make sure that the system operating lamp does not come on. Then, turn the battery disconnect switch key to the OFF position. If this is not done, the setting will possibly not be saved.

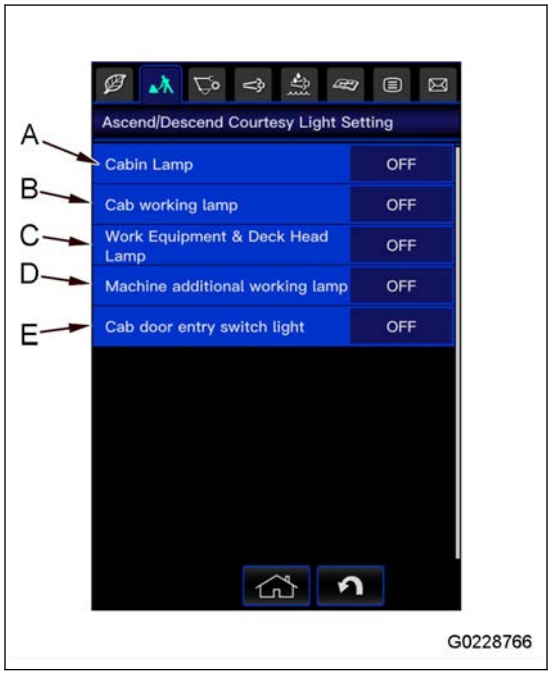

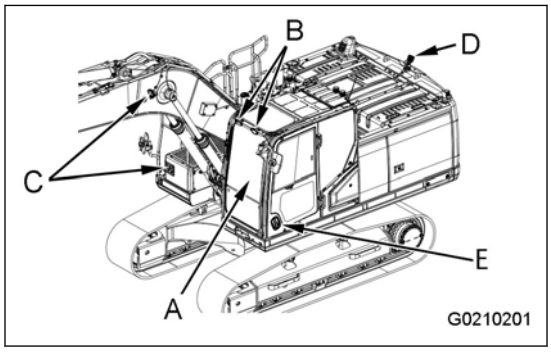

Extension Arm Setting

(If equipped)

You can set the installation condition and shape of the extension arm with “Extension Arm Setting”.

Control can be optimized if you change the settings to suit the actually installed extension arm.

If the usage limitation is set to ON and you do not log on with the supervisor ID, input the supervisor setting passcode.

For the usage limitation, see “Supervisor Setting (3-110)”.

For the supervisor ID, see “Operator ID Management (3-104)”.

When You Replace Extension Arm

1. Tap “Machine Setting” > “Extension Arm Setting”, and the screen shown in the figure is shown.
2. Tap “Installation Setting”.

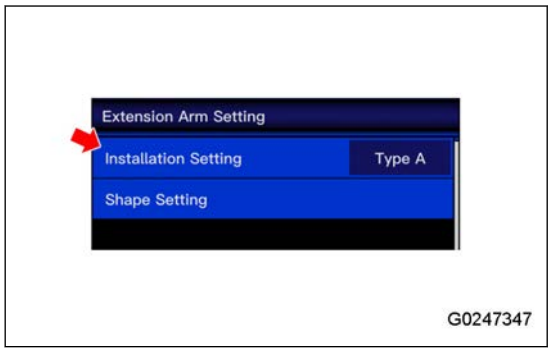

3. Select the type of extension arm that is replaced.

   None: The extension arm is not installed.

   Type A: Extension arm type A is installed.

   Type B: Extension arm type B is installed.

   For the type of extension arm, see “How to Set Dimensions of Extension Arm (3-68)”.

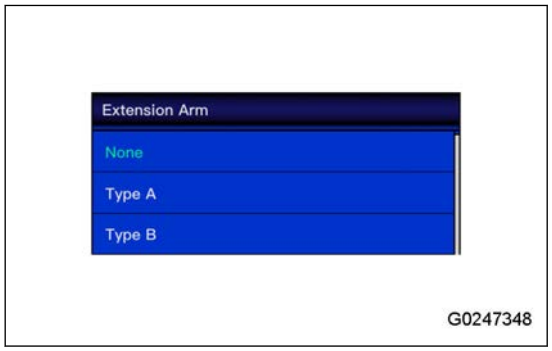

How to Set Dimensions of Extension Arm

1. Tap “Machine Setting” > “Extension Arm Setting”, and the screen shown in the figure is shown.
2. Tap “Shape Setting”.
3. Measure the dimensions to input the shape information of the extension arm.
4. Tap the dimension input fields (1) to (3). Enter the dimensions on Numeric Input screen. Tap “OK” button.
   Examine the input numeric value. If there is no problem, tap the checkmark button.

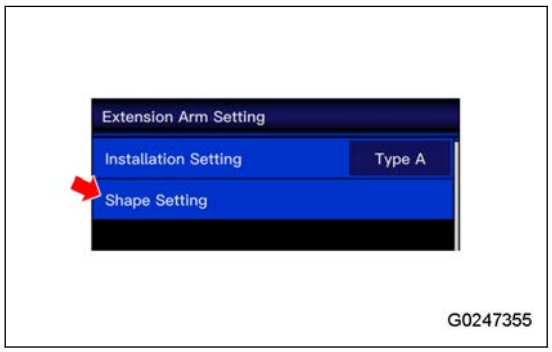

   - When Type A is selected

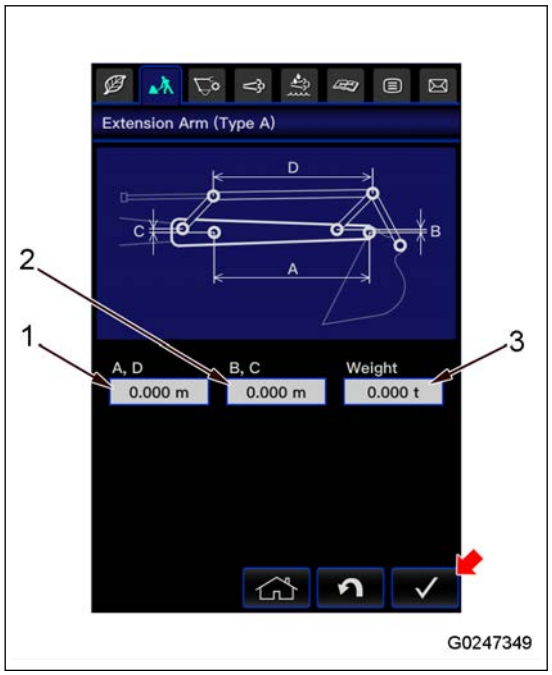

- When Type B is selected

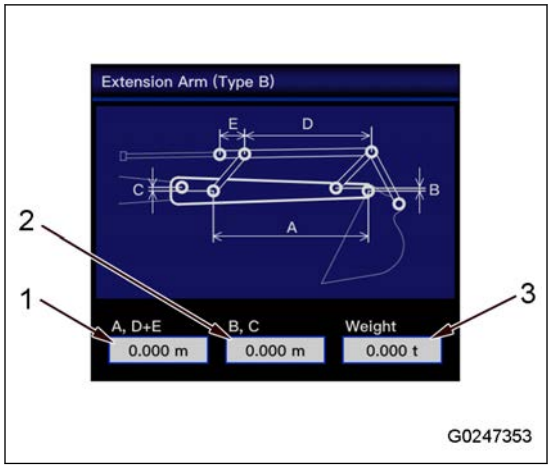

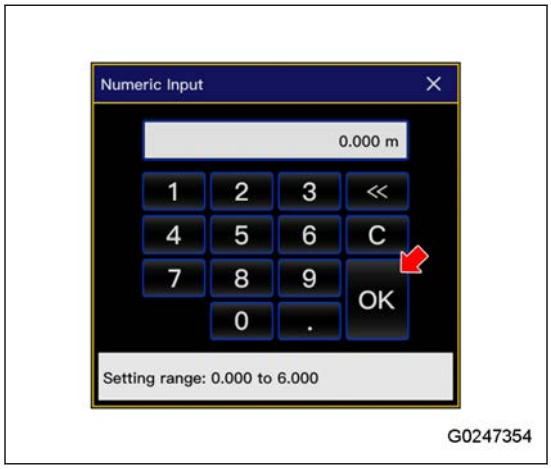

Working Mode at Startup Setting

You can set the working mode at startup setting.

For details about the working mode, see “How to Operate Work Mode (3-271)”.

1. Tap “Machine Setting” > “Working Mode at Startup”, and the screen shown in the figure is shown.
2. Select the working mode at startup setting.

   REMARK

   - If the working mode at startup setting is fixed by the supervisor setting, “Working Mode at Startup” is not shown and the setting cannot be changed.
     For the supervisor setting, see “Supervisor Setting (3-110)”.
   - If the system is started while a 1-way attachment (e.g. breaker) is set in the attachment flow path setting, it starts in the mode setting for breaker work regardless of the setting of the working mode at startup setting.

G0228772

Adjustment

Adjust the work equipment speed, economy mode, payload meter calibration, etc., by the items of the “Adjustment” menu (c).

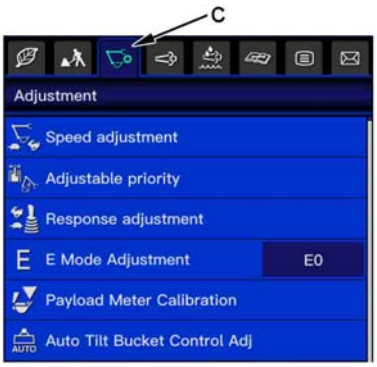

G0282102

Speed Adjustment

You can adjust the maximum speed of the work equipment and swing.

The settings are stored for each operator ID. If a work equipment single speed adjustment is made, the changed setting is taken over the next time the same operator logs on.

1. Tap “Adjustment” > “Speed Adjustment”, and the screen shown in the figure is shown.
2. Operate the slider to adjust the maximum speed for each operation. Move left to set slower, and move right to set faster.
   Eight items that follow can be adjusted.
   (A): All items
   (B): Boom RAISE
   (C): Boom LOWER
   (D): Arm IN
   (E): Arm OUT
   (F): Bucket CURL
   (G): Bucket DUMP
   (H): Swing

   REMARK

   When you tap “Default” button, all the items are set back to the factory default setting.

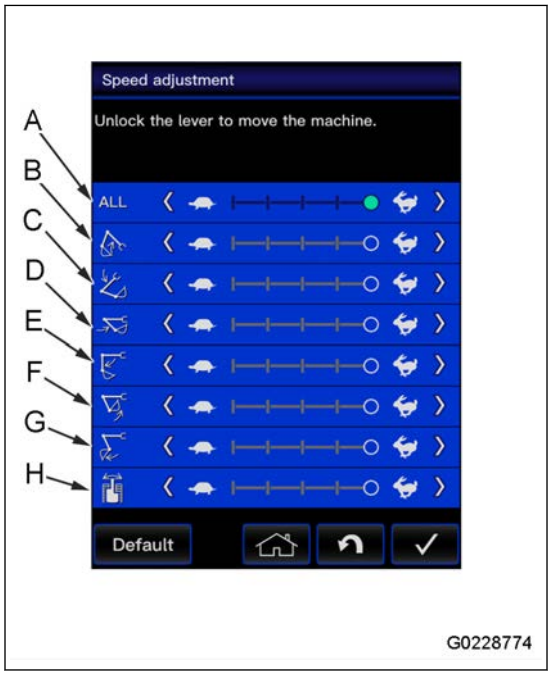

3. When the setting is completed, tap the checkmark button.

   REMARK

   - The cursor for (A) will be green or white when the all-in-one setting for all movements is ON and blue when OFF.
   - Other cursors will be blue when the all-in-one setting for all movements is ON and green or white when OFF.
     Green shows the factory default setting. White shows other settings.

Adjustable Priority

You can adjust the balance between the boom RAISE speed and swing speed.

The settings are stored for each operator ID. If “Adjustable priority” is done, the changed setting is taken over the next time the same operator logs on.

1. Tap “Adjustment” > “Adjustable priority”, and the screen shown in the figure is shown.
2. Operate the slider to adjust the balance between the boom RAISE speed and swing speed.
   Move the slider to the left to increase the swing speed. Move the slider to the right to increase the boom RAISE speed.

   REMARK

   When you tap “Default” button, it is set back to the factory default.

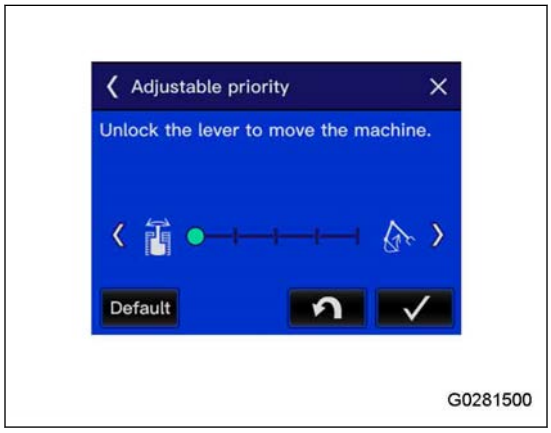

3. When the setting is completed, tap the checkmark button.

   REMARK

   The cursor will be green at the factory default setting and white at other settings.

Response Adjustment

You can adjust the response of the work equipment control lever.

The settings are stored for each operator ID. If the lever response is adjusted, the changed setting is taken over the next time the same operator logs on.

1. Tap “Adjustment” > “Response Adjustment”, and the screen shown in the figure is shown.
2. Operate the slider to adjust the response of the work equipment control lever.
   Move the slider to the left for a slower response. Move the slider to the right for a faster response.

   REMARK

   When you tap “Default” button, it is set back to the factory default.
3. When the setting is completed, tap the checkmark button.

   REMARK

   The cursor will be green at the factory default setting and white at other settings.

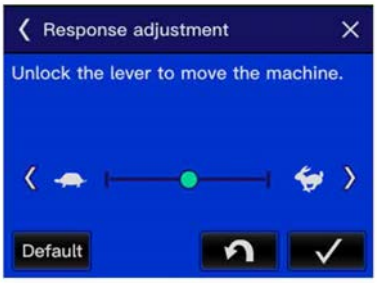

G0255416

Economy Mode Adjustment

You can adjust the output in the E mode on Economy Mode Adjustment.

1. Tap “Adjustment” > “E Mode Adjustment”, and the screen shown in the figure is shown.
2. Tap the mode you want to set.
   In the economy mode, the output lowers more when the setting item is changed from E0 to the higher one, and the fuel efficiency becomes better at the same time.

G0228777

Payload Meter Calibration

WARNING

Do not operate the machine while you look at the machine monitor or ICT monitor. Be sure to operate the machine while you look around the machine.

The payload meter calibration is a function to use the payload meter function at maximum precision by correction of work equipment weight saved in the machine, the variation of sensors, and such.

The payload meter calibration is required in the cases that follow.

- At the delivery of the new machine
- When you change to an attachment for which payload meter calibration is not done even one time
- When the weight or center of gravity changes, such as attachment and fall off of soil to/from the attachment or work equipment
- When the machine monitor, ICT monitor or controller is replaced
- When the pressure sensor or IMU sensor is replaced
- At specified interval (1 time in 3 months)

For the payload meter function, see “Payload Meter Function (3-434)”.

1. Stop the machine on a level ground. Make sure the safety around it.

   REMARK

   Before you start the calibration, make sure that no failure codes are shown in the “Current Abnormality” on the Maintenance menu.
   When you start the calibration, align the orientations of the upper structure and the tracks.
   Do not make a swing operation during the calibration.

2. Do a warm-up operation to adjust the hydraulic oil to the correct temperature.

   For the warm-up operation, see “How to Do Hydraulic System Warm-up Operation (3-241)”.
   When the hydraulic oil temperature is low, the low temperature display is as shown in the figure.

   - Display (A) when temperature is correct: Caution lamp background (C) is blue.
   - Display (B) when temperature is low: Caution lamp background (C) is white.

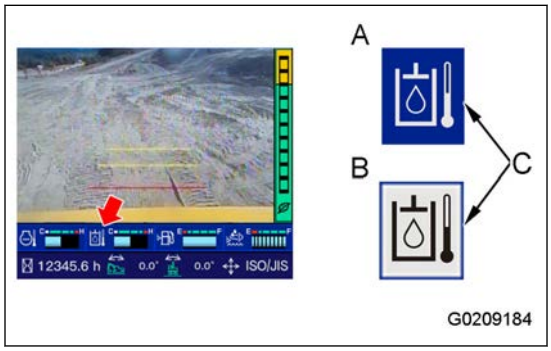

3. Tap “Adjustment” > “Payload Meter Calibration”, and the screen shown in the figure is shown.

   REMARK

   The date of the payload meter calibration is stored and shown.
   When a payload meter calibration is done, the date is updated.

4. Tap “Payload Meter Caribration”.

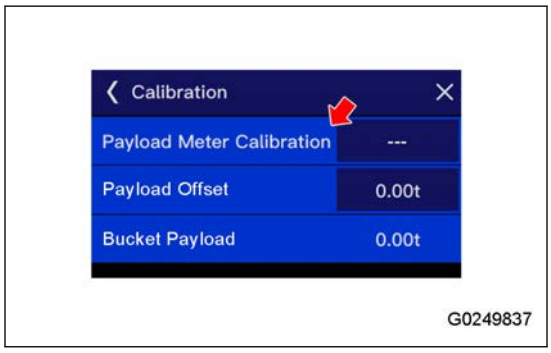

5. Make sure that the attachment agrees with the display on the machine monitor. Tap the checkmark button.

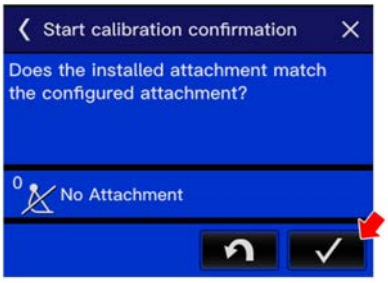

G0228779

6. See the caution contents, and tap the checkmark button.

REMARK

During the payload meter calibration, the maximum work equipment speed is restricted.

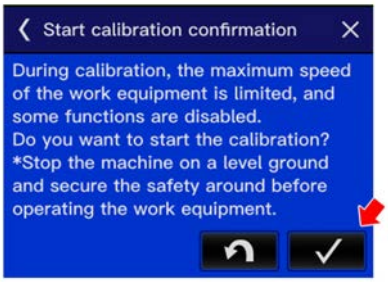

G0228780

7. Set the work equipment posture as shown in the display (1) on the machine monitor.

The machine monitor shows the current work equipment angle (2).
When all the work equipment angles become as shown in the fields (1) in the machine monitor, the “OK” button (3) is highlighted in green.
When the “OK” button (3) is highlighted in green, keep the work equipment stationary for 10 seconds. After 10 seconds in a stationary state, the measurement is completed.
When the measurement is completed, the buzzer operates and the screen changes to the next screen.

REMARK

Do not make lever inputs while the work equipment is stationary. If an input is sensed, the monitor display can be blocked. If blocked, tap the CLOSE button. Do the procedure again from the beginning.

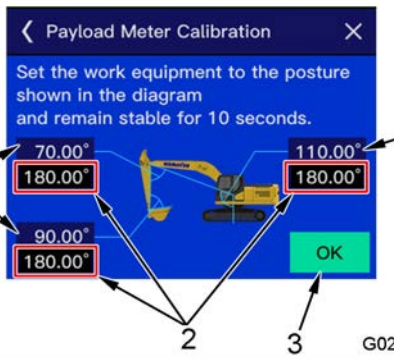

G0235871

8. Raise the boom as shown on the machine monitor.

When the measurement is completed, the buzzer operates and the “OK” button is highlighted in green.
When the measurement is completed, stop the boom RAISE operation and let it stop.
The screen changes to the next screen.

REMARK

Operate the work equipment control lever to full stroke.
The work equipment speed is lower than usual even if the lever is operated to full stroke because the work equipment speed is restricted.

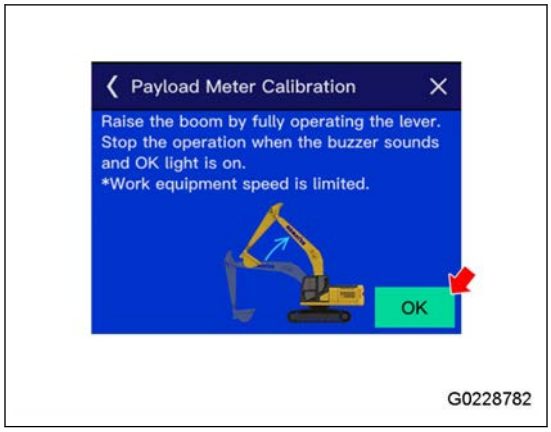

9. Lower the boom as shown on the machine monitor.

When the measurement is completed, the buzzer operates and the “OK” button is highlighted in green.
When the measurement is completed, stop the boom LOWER operation and let it stop.
The screen changes to the next screen.

REMARK

Operate the work equipment control lever to full stroke.
The work equipment speed is lower than usual even if the lever is operated to full stroke because the work equipment speed is restricted.

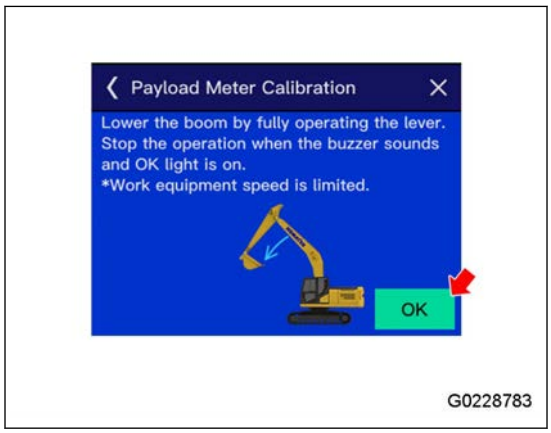

10. Set the work equipment posture as shown in the display (4) on the machine monitor.

REMARK

Do not make lever inputs while the work equipment is stationary. If an input is sensed, the monitor display can be blocked. If blocked, tap the CLOSE button. Do the procedure again from the beginning.

The machine monitor shows the current work equipment angle (5).
When all the work equipment angles become as shown in the display (4) in the machine monitor, the “OK” button (6) is highlighted in green.
When “OK” button (6) is highlighted in green, keep the work equipment stationary for 10 seconds. After 10 seconds in a stationary state, the measurement is completed.
When the measurement is completed, the buzzer operates and the screen changes to the next screen.

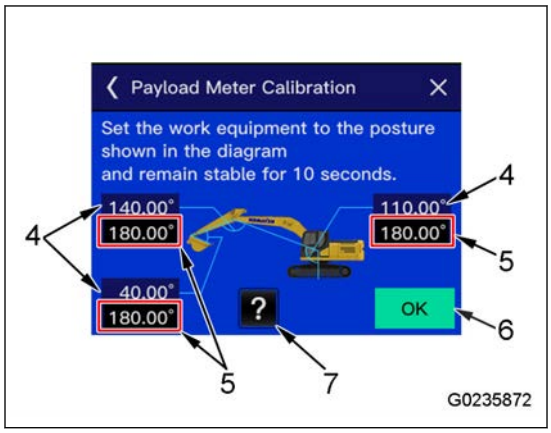

REMARK

If the bucket angle does not enter the recommended angle, tap “ ? ” button (7).

When you tap “SET” button, you can start the measurement without the bucket angle set. This can, though, cause an error in the calibration result. So, adjust the posture of the bucket to let the bucket angle be almost same as the recommended angle.

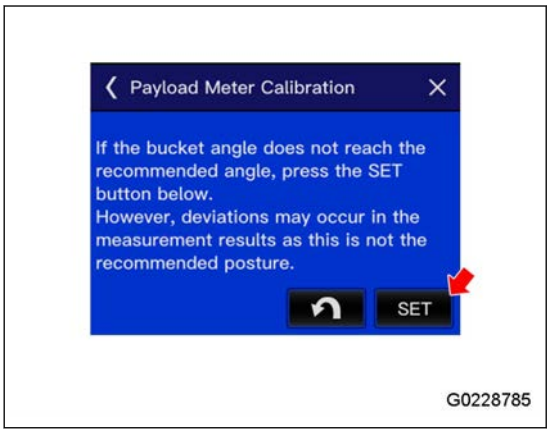

11. Raise the boom as shown on the machine monitor.

When the measurement is completed, the buzzer operates and the “OK” button is highlighted in green.
When the measurement is completed, stop the boom RAISE operation and let it stop.
The screen changes to the next screen.

REMARK

Operate the work equipment control lever to full stroke.
The work equipment speed is lower than usual even if the lever is operated to full stroke because the work equipment speed is restricted.

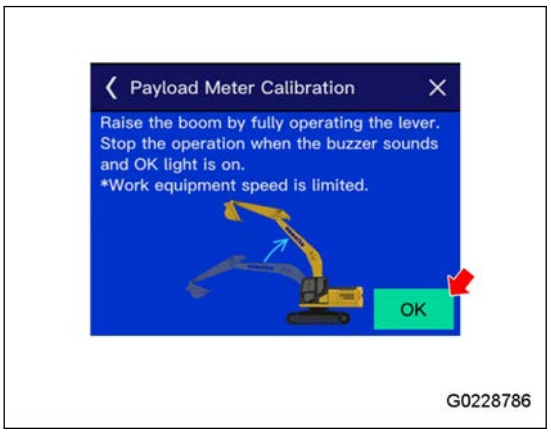

12. Set the work equipment posture as shown in the display (8) on the machine monitor.

The machine monitor shows the current work equipment angle (9).
When all the work equipment angles become as shown in the display (8) in the machine monitor, the “OK” button (10) is highlighted in green.
When “OK” button (10) is highlighted in green, keep the work equipment stationary for 10 seconds. After 10 seconds in a stationary state, the measurement is completed.
When the measurement is completed, the buzzer operates and the screen changes to the next screen.

REMARK

Do not make lever inputs when “OK” button (10) is highlighted in green. If an input is sensed, the monitor display can be blocked. If blocked, tap the CLOSE button. Do the procedure again from the beginning.

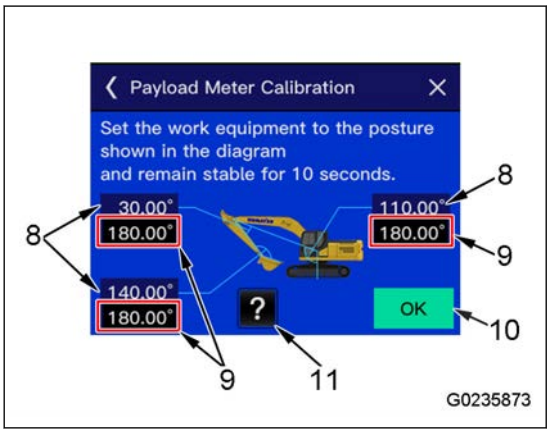

REMARK

If the bucket angle does not enter the recommended angle, tap “ ? ” button (11).

When you tap “SET” button, you can start the measurement without the bucket angle set. This can, though, cause an error in the calibration result. So, adjust the posture of the bucket to let the bucket angle be almost same as the recommended angle.

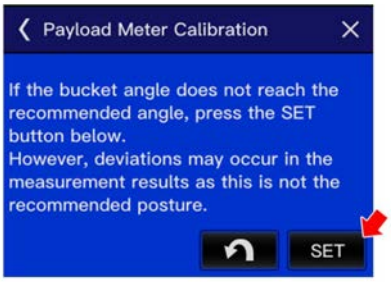

G0228785

13. Raise the boom as shown on the machine monitor.

When the measurement is completed, the buzzer operates and the “OK” button is highlighted in green.
When the measurement is completed, stop the boom RAISE operation and let it stop.
The screen changes to the next screen.

REMARK

Operate the work equipment control lever to full stroke.
The work equipment speed is lower than usual even if the lever is operated to full stroke because the work equipment speed is restricted.

G0228788

14. The confirmation screen is shown. Tap the checkmark button.

REMARK

The restricted functions and speeds recover.

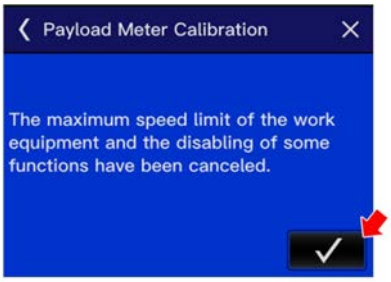

G0228789

15. The confirmation screen to select whether to reflect the calibration result to the machine is shown. Tap the checkmark button.

REMARK

If the measurement fails during the payload meter calibration, do the calibration again from the beginning or middle by the display on the machine monitor.

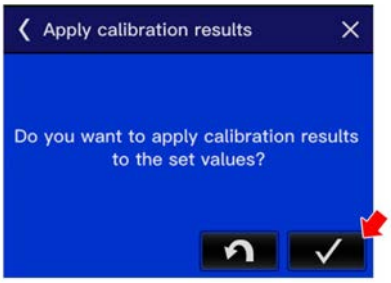

G0228790

Payload Offset

Payload Offset compensates Payload Meter measurement value by the input value.

For Payload Meter Function, see “Payload Meter Function (3-434)”.

1. Select “Adjustment” > “Payload Meter Calibration”. The screen in the figure is shown.

   REMARK

   The current Payload Offset setting value is shown on Payload Offset. When you change the Payload Offset setting, the value is updated.
   The current bucket payload is shown on Bucket Payload in real time.

2. Tap “Payload Offset”.

G0249838

3. The value input screen is shown. Input how much weight to offset. Then, tap OK button.
4. Read Bucket Payload. Make sure that the value is changed.

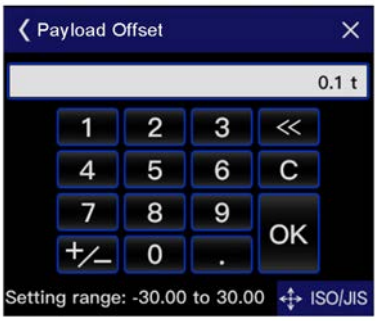

G0249839

How to Adjust Payload Weight Value

If the required precision is not reached or the measured value has a deviation, you can use Payload Meter Payload Offset function to compensate the measured value.

REMARK

Payload Meter function can have variation errors because of the influence of the operation method, soil condition, installed attachment, etc. The precision can deteriorate by the compensation.

Before you do the compensation, reset the stroke of the bucket cylinder and do Payload Meter Calibration.

For how to reset the stroke of the bucket cylinder, see “Cylinder Function State Caution Lamp (3-33)”.

For Payload Meter Calibration, see “Payload Meter Calibration (3-73)”.

If Bucket Payload is significantly different from the weight (actual weight) measured by the scale or such, do the operations that follow.

1. Read Bucket Payload at the time of boom RAISE operation.

   To raise the boom, set the arm at 90 ° angle to the ground. Then, operate the boom only.

   Do not operate the boom suddenly during the boom RAISE operation.

G0249841

G0249840

2. Input Payload Offset as follows.

   (a) If the actual weight approximates the weight when the bucket is full (loaded weight)

   Subtract Bucket Payload from the actual weight. Input the value as Payload Offset value.

   (b) If the actual weight does not approximate the weight when the bucket is full (loaded weight)

   Subtract Bucket Payload from the actual weight. Change the value by the ratio of the loaded weight to the actual weight. Input that value as the Payload Offset value.

   Example) If the actual weight is 1000 kg and Bucket Payload is shown as 870 kg, Payload Offset value for a loaded weight of 2000 kg is as follows.

   (1000 – 870) × (2000 / 1000) ＝ 260 [kg]

G0249842

3. Do step 1. Make sure that the actual weight and Bucket Payload are almost the same.

   REMARK

   In the case of (b), use a truck scale or such to read the weight when the bucket is full after the compensation.

G0249841

Adjust Auto Tilt Bucket Control

(If equipped)

When you use the auto tilt bucket function of the 3D machine control function, adjust the control parameters in this procedure. For details how to use the auto tilt bucket, see 3D Machine Control, introduction of optional attachment devices.

In semi-auto mode of the 3D machine control function, the behaviour and construction precision of the work equipment can change because of the hydraulic performance of the tilt bucket.

Control can be optimized if you change the settings by the hydraulic performance of the actually installed tilt bucket.

REMARK

You cannot change the settings for this item while semi-auto mode operates.
Change the mode to the manual mode, and do the setting.

How to Change Piping to Be Used

1. Tap “Adjustment”>“Auto Tilt Bucket Control Adj”, and the screen shown in the figure is shown.
2. Tap “Actuator Select”.

G0266608

3. Select “ATT1” or “ATT2” for the piping that uses the auto-tilt bucket.

G0266609

How to Adjust Auto Tilt Bucket Control

⚠ WARNING

The tilt bucket moves automatically during adjustment. Be sure to secure the safety around the area before you start the adjustment.

⚠ CAUTION

- **Keep the sufficient height for the tilt bucket not to touch the ground during the tilt operation, and then do the calibration.**
- **Complete "Sensor Mount" in the Attachment menu or Indirect Attachment menu of the ICT monitor, and then do "Auto Tilt Bucket Control Adj".**
- **Only one result of the auto tilt bucket control adjustment is saved. When the tilt bucket or tilt coupler with different hydraulic properties is installed, you need to do "Auto Tilt Bucket Control Adj" again.**

1. Before you start the adjustment, see the flow rate setting on the setting screen of the attachment, and adjust the flow rate to that is easy to operate.

   The speed of adjustment changes if you change the flow rate setting.

   For the attachment flow rate setting, see "How to Edit Attachment Setting (3-303)".

   REMARK

   If the flow rate is set lower than the flow rate normally used during adjustment, the control precision at tilt low speed can be improved.

2. Adjust the hydraulic oil temperature in the range (A) shown in the figure.

   To do the adjustment, the hydraulic oil temperature must be in the range (A) of 40 to 60 ℃ {104 to 140 ℉}.

   The working mode must be P mode, P+ mode, or E0 to E4 mode. Cancel the auto-deceleration as well.

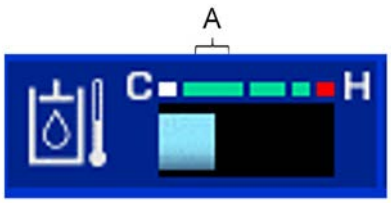

G0209199

3. Tap "Adjustment">"Auto Tilt Bucket Control Adj", and the screen shown in the figure is shown.
4. Tap "Perform Adjustment".

G0266610

5. Move the machine to be the same posture as that shown on the machine monitor.

   Move the machine to the correct posture. Tap “NEXT”.

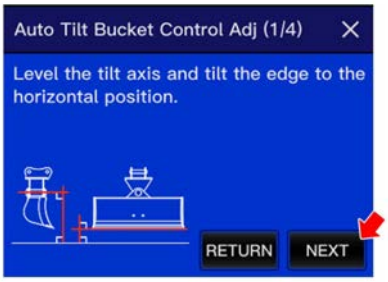

G0228792

6. Examine the conditions that follow, and then hold down “START”.
   - Make sure that there is no person in the area around the machine and no obstacle in the area where the tilt bucket operates.
   - Set each control lever to the NEUTRAL position.
   - Set the fuel control dial to the High idle (MAX) position.
   - Make sure that the hydraulic oil temperature is in the range of (A) in the step 2.
   - Set the lock lever to the FREE position.

G0228793

   The adjustment starts. Wait until it is completed.

   REMARK

   If you tap “CLEAR”, the screen goes back to the screen of the step 5.

G0228794

7. When the adjustment is completed, the buzzer operates and the screen changes to the screen shown in the figure. Tap “NEXT”.

   REMARK

   If the adjustment is completed abnormally, a failure cause code is shown.
   See the Failure Cause Code List to find the cause, and do “Auto Tilt Bucket Control Adjustment” again.

G0228795

8. Move the machine again to be the same posture as that shown on the machine monitor.

   Move the machine to the correct posture. Tap “NEXT”.

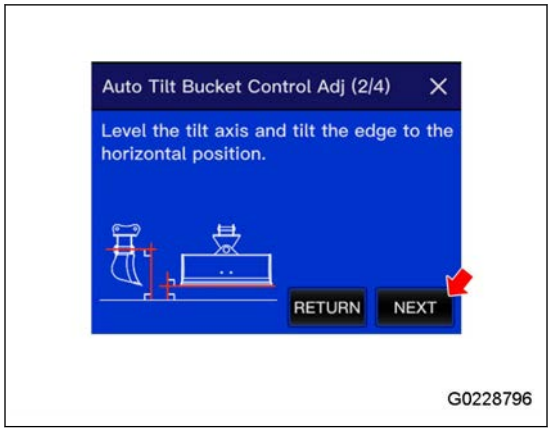

9. Examine the conditions that follow, and then hold down “START”.
   - Make sure that there is no person in the area around the machine and no obstacle in the area where the tilt bucket operates.
   - Set each control lever to the NEUTRAL position.
   - Set the fuel control dial to the High idle (MAX) position.
   - Make sure that the hydraulic oil temperature is in the range of (A) in the step 2.
   - Set the lock lever to the FREE position.

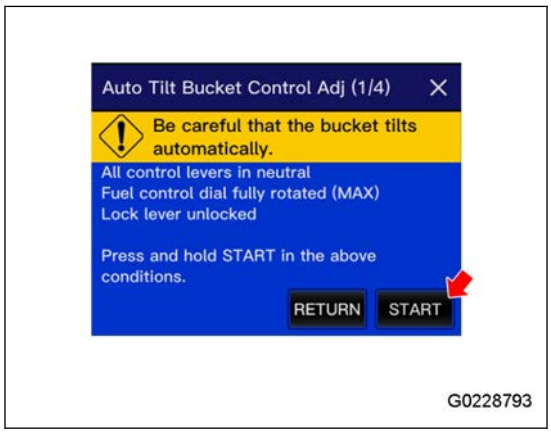

   The adjustment starts. Wait until it is completed.

   REMARK

   If you tap “CLEAR”, the screen goes back to the screen of the step 8.

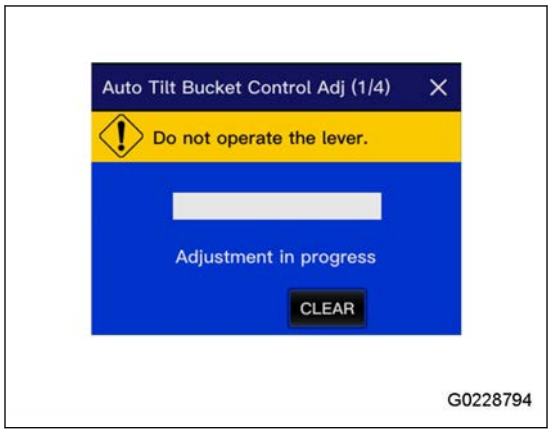

10. When the adjustment is completed, the buzzer operates and the screen changes to the screen shown in the figure. Tap “NEXT”.

    REMARK

    If the adjustment is completed abnormally, a failure cause code is shown.
    See the Failure Cause Code List to find the cause, and do “Auto Tilt Bucket Control Adjustment” again.

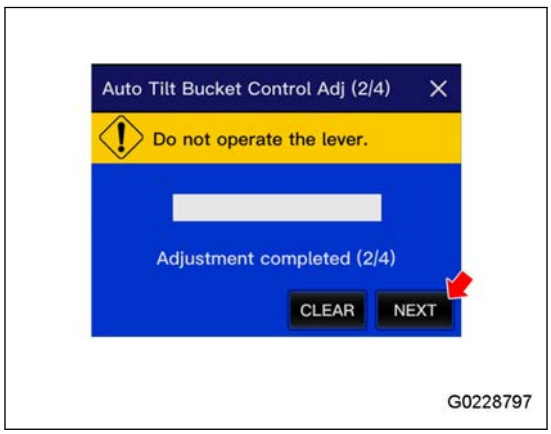

11. Move the machine again to be the same posture as that shown on the machine monitor.

    Move the machine to the correct posture. Tap “NEXT”.

G0281492

12. Move the machine again to be the same posture as that shown on the machine monitor.

    At this time, operate in the states that follow.

    - Make sure that there is no person in the area around the machine and no obstacle in the area where the tilt bucket operates.
    - Set the work equipment control lever to the stroke end.
    - Set the fuel control dial to the High idle (MAX) position.

G0281493

    Keep the lever at the stroke end and wait until the operation completes.

    REMARK

    If you tap “CLEAR”, the screen goes back to the screen of the step 11.

G0228800

13. When the adjustment is completed, the buzzer operates and the screen changes to the screen shown in the figure. Move the lever back to the NEUTRAL position. Tap “NEXT”.

    REMARK

    If the adjustment is completed abnormally, a failure cause code is shown.
    See the Failure Cause Code List to find the cause, and do “Auto Tilt Bucket Control Adjustment” again.

G0228801

14. Move the machine again to be the same posture as that shown on the machine monitor.

    Move the machine to the correct posture. Tap “NEXT”.

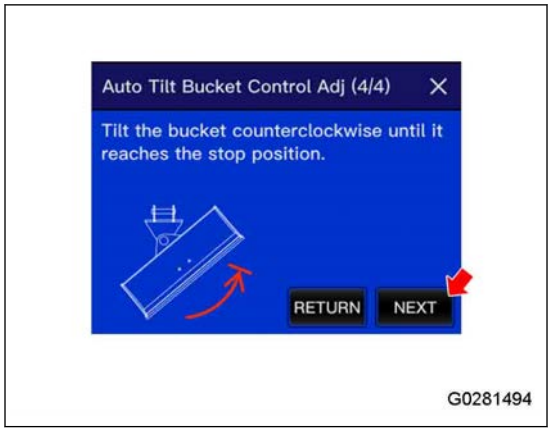

15. Move the machine again to be the same posture as that shown on the machine monitor.

    At this time, operate in the states that follow.

    - Make sure that there is no person in the area around the machine and no obstacle in the area where the tilt bucket operates.
    - Set the work equipment control lever to the stroke end.
    - Set the fuel control dial to the High idle (MAX) position.

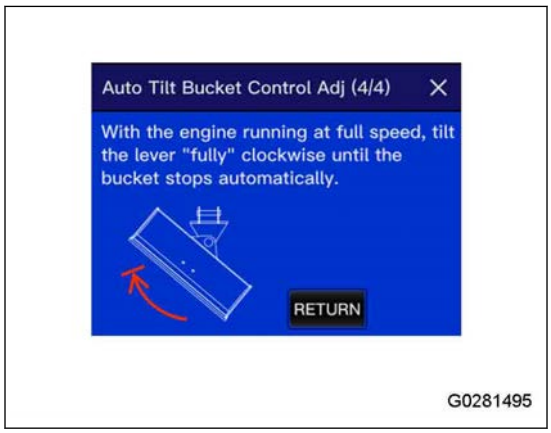

    Keep the lever at the stroke end and wait until the operation completes.

    REMARK

    If you tap “CLEAR”, the screen goes back to the screen of the step 14.

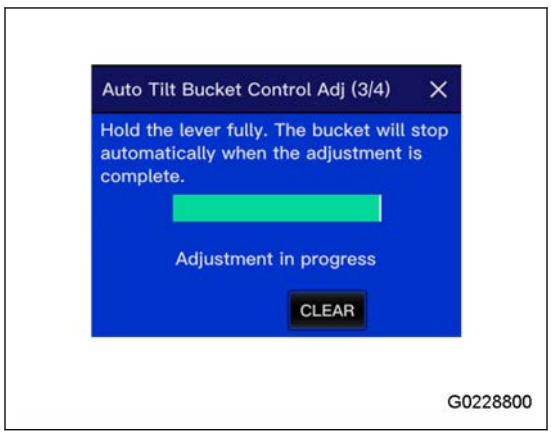

16. When the adjustment is completed, the buzzer operates and the screen changes to the screen shown in the figure. Move the lever back to the NEUTRAL position. Tap the checkmark button.

    REMARK

    If the adjustment is completed abnormally, a failure cause code is shown.
    See the Failure Cause Code List to find the cause, and do “Auto Tilt Bucket Control Adjustment” again.

Failure Cause Code List

Cause code	Content	Action
FF-11	Engine speed signal is 0 rpm.	Make sure that the engine is started.
FF-12	Hydraulic oil temperature is low.	Make sure that the hydraulic oil temperature is 40 ℃ {104 ℉} or above.
FF-13	Hydraulic oil temperature is high.	Make sure that the hydraulic oil temperature is 60 ℃ {140 ℉} or below.
FF-14	Overheat	Examine for the overheat.
FF-15	CAN communication is defective.	Consult your Komatsu distributor for the inspection and maintenance.
FF-16	The control lever is not in NEUTRAL.	Set the control lever to the NEUTRAL position.
FF-17	The fuel control dial is not set to the High idle (MAX) position.	Set the fuel control dial to the High idle (MAX) position.
FF-18	Sensor installation setting is not completed	Do the sensor installation setting. (See 3D Machine Control, Setting, “Sensor Mount”.)
FF-19	The working mode and oil pressure settings are not correct	Do this operation while the tilt bucket moves with the manual operation.
FF-21	Stroke sensor system for bucket tilt cylinder is abnormal.	Consult your Komatsu distributor for the inspection and maintenance.
FF-22 FF-23	Attachment flow rate target value is not sufficient	Make sure that there is no other lever operation.
FF-24	PPC lever is locked	Release the PPC lever to do this work.
FF-25	ATT1 drive EPC system error	There can be a problem in the electric system. Consult your Komatsu distributor for the inspection and maintenance.
FF-26	ATT1 drive lever potentiometer system error	There can be a problem in the electric system. Consult your Komatsu distributor for the inspection and maintenance.
FF-27	No tilt movement	Do the calibration again.
FF-28	Lever not at full stroke	Keep the lever fully applied.
FF-29	Cannot rotate bucket clockwise to stopper position	Rotate bucket clockwise to stopper position
FF-30	Cannot rotate bucket counterclockwise to stopper position	Rotate bucket counterclockwise to stopper position
FF-31	Attachment flow setting is too low	Increase the attachment flow setting.

How to Do Tilt Speed Fine Adjustment

1. Tap “Adjust”>“Auto Tilt Bucket Adjustment”, and the screen shown in the figure is shown.

G0266608

2. Tap “Tilt Speed Fine Adjustment”.

   REMARK

   Clockwise and counterclockwise speeds can be adjusted separately.

G0267388

Aftertreatment Device Regeneration

Each item of “Aftertreatment Device Regeneration” menu (d) is for settings and operations of the aftertreatment devices regeneration.

For details about the aftertreatment devices regeneration, see “Handle Komatsu Diesel Particulate Filter (KDPF) (3-172)”.

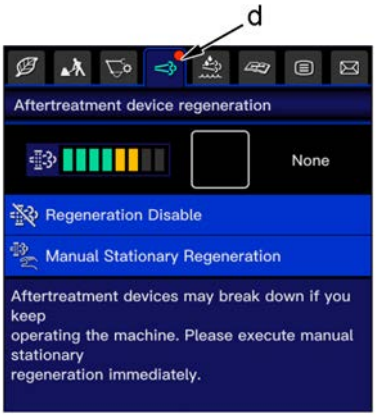

G0228807

SCR Information

Each item of “SCR Information” menu (e) shows the information related to SCR and DEF.

For details about the SCR, see “Handle Urea SCR System Warning (3-183)”.

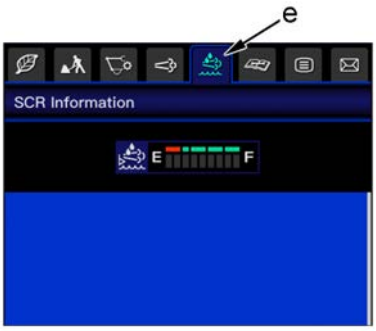

G0228808

Maintenance

You can show or set the notification about maintenance on each item of “Maintenance” menu (f).

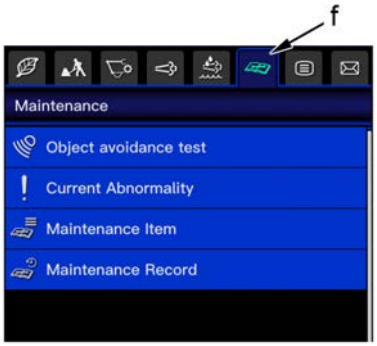

G0235874

Object Avoidance Test

CAUTION

- **Examine the object avoidance on a level, hard and flat ground.**
- **Secure a space around the machine, and do the check in a safe area where there are no people or obstacles around the machine.**
- **Before you walk around the machine, be sure to secure the safety around the area.**

You can inspect the radars installed at 4 places used for the object avoidance.

For other daily inspection, see “How to Examine Before You Start Operation (3-203)”.

1. Stop the machine on a hard and flat ground.
2. Operate the operating part (g) of the lock lever to set it to the LOCK position (L) securely.

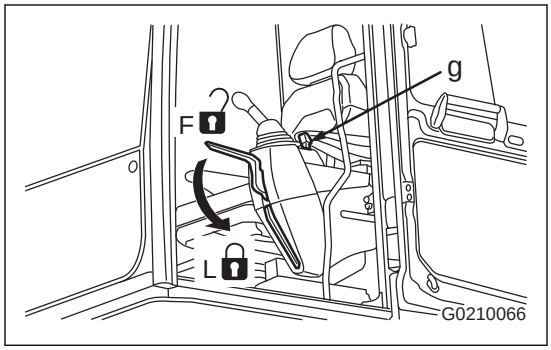

3. Tap “Maintenance” > “Object Avoidance Test”, and the screen shown in the figure is shown.
4. Examine the check items shown on the machine monitor, and tap the checkmark button.
   - Set the lock lever to the LOCK position.
   - Set all the levers to the NEUTRAL position.

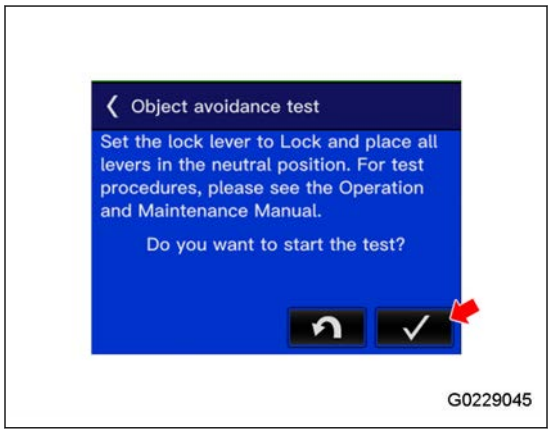

5. The machine monitor shows the screen in the figure during the check.

   Gray area: Now in check

   Green area: Check done

REMARK

During the radar daily inspection, the alarm buzzer operates at 1-second intervals to show that the check is in operation. The screen display changes in sequence from the radar for which the check is completed. The radar checks do not always complete in the sequence you walk in front of them.
The check is stopped in the conditions that follow.

- Tap Return button.
- 5 minutes go by after the start of the daily inspection of radars.
- A failure is sensed.
- Set the lock lever to the FREE position (F).
- One of the control levers is operated.

6. Walk at a distance (A) of 1 to 3 m {3 ft 3 in to 9 ft 10 in} from the outline of the machine across the front of the radars (1) to (4).

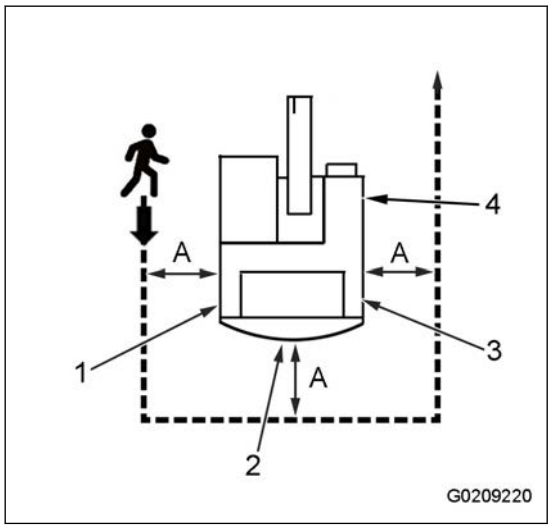

7. When the check is completed, the machine monitor becomes the screen shown in the figure.

   Tap the checkmark button. The screen goes back to the standard screen.

   The check of the object avoidance is completed.

   If the system does not operate correctly, make sure that there is no foreign material attached to the radar covers.

   Consult your Komatsu distributor if it does not operate after you examine the items above.

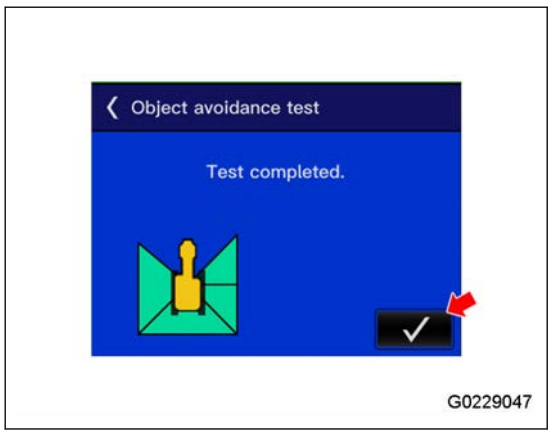

Current Abnormality

1. Tap “Maintenance” > “Current Abnormality”, and the screen shown in the figure is shown.
2. The list of current abnormalities is shown.

   Do the necessary remedies in response to the message shown on the machine monitor.

   REMARK

   “Current Abnormality” can also be shown if you tap the warning display on the standard screen.
   For details, see “Warning Display (3-17)”.

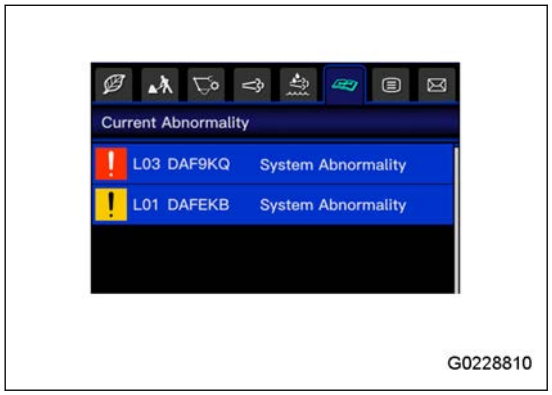

Maintenance Item Screen Setting

1. Tap “Maintenance” > “Maintenance Item”, and the screen shown in the figure is shown.

   The display items on the maintenance are as follows.

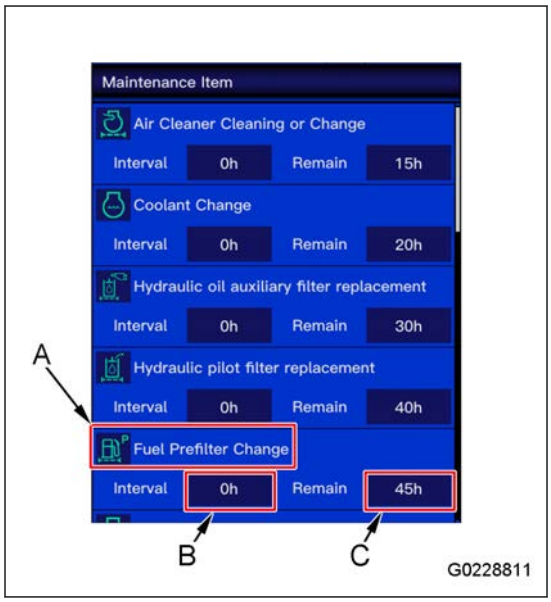

A	B
Air Cleaner Cleaning or Change	-
Coolant Change	-
Additional Hyd Oil Filter Change	-
Hyd Oil Pilot Filter Change	-
Fuel Prefilter Change	500
Engine Oil Change (*1)	1000
Engine Oil Filter Change (*1)	1000
Fuel Main Filter Change	1000
Hyd Oil Tank Breather Change	1000
Swing Machinery Case Oil Change	1000
DEF Tank Breather Change	1000
Final Drive Case Oil Change	2000
Replace DEF Filter	2000
Hydraulic Oil Filter Change	3000
DEF Tank Cleaning	4500
Hydraulic Oil Change	6000
KDPF Filter Cleaning	8000

A: Maintenance item

B: Default maintenance interval settings (h)

C: Remaining time until maintenance (h)

*1: When you use the engine oil for cold district, the maintenance interval setting must be changed.

REMARK

When the remaining time until maintenance becomes shorter than the set maintenance notice time, the remaining time display changes to yellow. If the remaining time until maintenance is 0 or less, the remaining time display changes to red.

2. When the maintenance is done, reset the maintenance due time. Hold down each maintenance item to move to the reset screen.

REMARK

If you do not log on with a supervisor ID and a usage limitation is set for Maintenance Reset, you must input the supervisor setting passcode to change to the Maintenance Reset screen.

3. Tap the checkmark button. The screen changes to the reset confirmation screen.

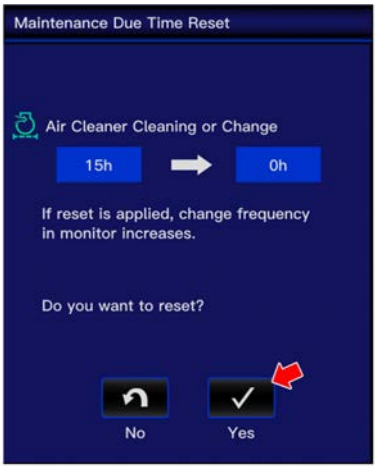

G0228812

4. Tap the checkmark button on the reset confirmation screen. The reset operation starts.

   When reset, the change count increases by 1.

G0228813

Maintenance Record Check

1. Tap “Maintenance” > “Maintenance Record”, and the screen shown in the figure is shown.

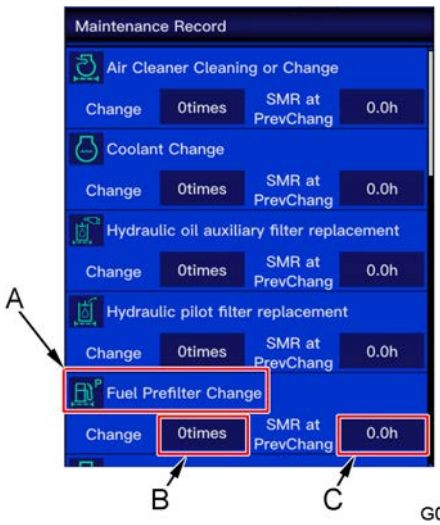

G0228814

2. You can see the number of past maintenances of each maintenance item.

   A: Maintenance item

   B: Number of maintenances

   C: Service meter reading (SMR) at the last replacement

   Tap the Maintenance Item(A) of the item that is calculated in response to the breaker use state, and it is highlighted.

   Also, when you push and hold it for 5 seconds or more, the calculated number of times in response to the breaker use state is shown.

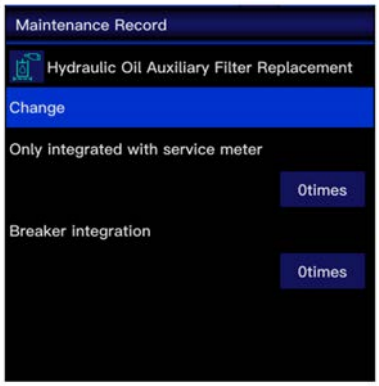

G0274296

Operator and Monitor Setting

You can do the settings for the machine monitor on each item of “Operator and Monitor Setting” menu (g).

G0235875

Monitoring

You can monitor the state of the machine.

The 14 items that follow can be shown. Up to 6 of them can be shown at the same time.

- Engine speed
- Throttle position
- Crankcase pressure
- Soot accumulation

- Engine coolant temperature
- Hydraulic oil temperature
- Front pump pressure
- Rear pump pressure
- Fan speed
- Battery voltage

1. Tap “Operator and Monitor Setting” > “Monitoring”, and the screen shown in the figure is shown.

   Select the monitoring items to be shown from “Monitoring Selection Menu” list.
   When the selection is completed, tap the checkmark button.

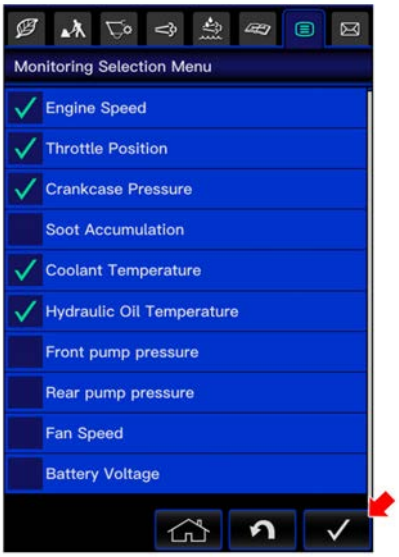

G0228816

2. The monitoring results are shown under the single camera image.

   Scroll up and down to see the hidden items.
   When you push the RETURN button, the screen goes back to “Monitoring Selection Menu” list screen.
   When you push the CLOSE button, the screen goes back to the standard screen.

G0228817

Brightness Adjustment

You can adjust the brightness of the machine monitor screen, keypad LED, and starting switch LED.

Tap “Operator and Monitor Setting” > “Brightness Adjustment”, and the screen shown in the figure is shown. Select the item to be set and tap it.

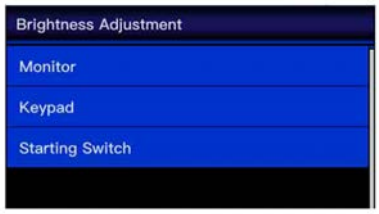

G0281506

REMARK

When the machine monitor screen is in the daytime mode, you can adjust the brightness of the daytime mode.
When the machine monitor screen is in the nighttime mode, you can adjust the brightness of the nighttime mode.
For the changeover of the daytime mode/nighttime mode of the machine monitor, see “Monitor Brightness Selector Switch (3-133)”.

When you adjust the brightness of the machine monitor

1. Tap “Operator and Monitor Setting” > “Brightness Adjustment” > “Monitor”, and the screen shown in the figure is shown.
2. Use the slider to adjust brightness.
   After you complete the adjustment, tap the checkmark button.

   REMARK

   The ▽ symbol on the slider shows the factory default brightness.

G0228819

When you adjust the brightness of the keypad

You can adjust the brightness of the LED of the keypad.

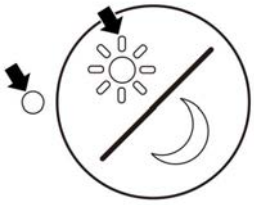
G0209234

1. Tap “Operator and Monitor Setting” > “Brightness Adjustment” > “Keypad”, and the screen shown in the figure is shown.
2. Use the slider to adjust brightness.
   After you complete the adjustment, tap the checkmark button.

   REMARK

   The ▽ symbol on the slider shows the factory default brightness.

G0281507

When you adjust the brightness of the starting switch

You can adjust the brightness of the LED of the starting switch.

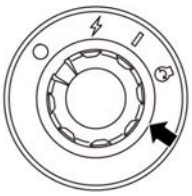

G0209236

1. Tap “Operator and Monitor Setting” > “Brightness Adjustment” > “Starting Switch”, and the screen shown in the figure is shown.
2. Use the slider to adjust brightness.
   After you complete the adjustment, tap the checkmark button.

   REMARK

   The ▽ symbol on the slider shows the factory default brightness.

G0228821

NOTICE

When you turn the battery disconnect switch to the OFF position for the first time after the setting, turn the starting switch to the OFF position. Make sure that the system operating lamp does not come on. Then, turn the battery disconnect switch key to the OFF position. If this is not done, the setting will possibly not be saved.

Video Quality Adjustment

You can adjust the image quality in the range where the bird's-eye view image and single camera image are shown.

REMARK

In addition to the camera image, all the items shown in this range, such as the camera icon and single camera reference lines, are adjusted.

Four items that follow can be adjusted. For each adjustment method, see the description for each item.

- Contrast
- Brightness Offset
- Color Level
- Sharpness

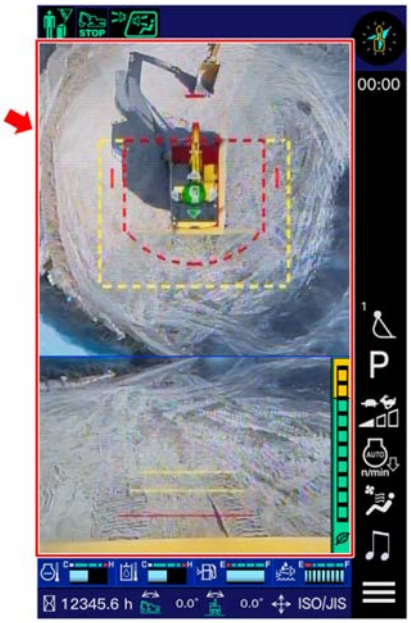

G0238555

Adjust the image quality as follows.

1. Tap “Operator and Monitor Setting” > “Video Quality Adjustment”, and the screen shown in the figure is shown.
2. Adjust the image quality.

G0261369

3. After you complete the setting, tap the checkmark button (A).

   When you tap “Default” button (B), the factory default settings are restored.

G0209244

Contrast

Contrast is a parameter that adjusts the difference between the shadows and highlights in the image.

When you increase Contrast, the difference between the highlights and shadows becomes clear. Adjust the slider to set.

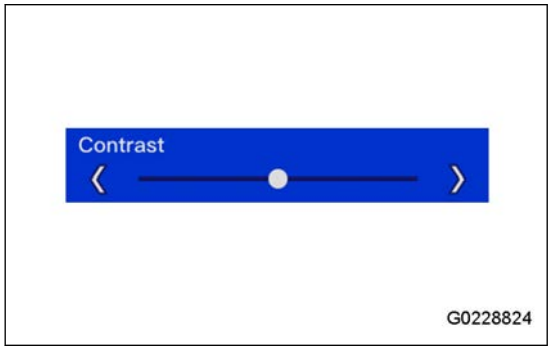

Brightness Offset

Brightness Offset is a parameter to adjust the brightness of the white color in the image.

When you increase Brightness Offset, the white color in the image becomes brighter.

When you decrease Brightness Offset, the white color becomes darker.

Adjust the slider to set.

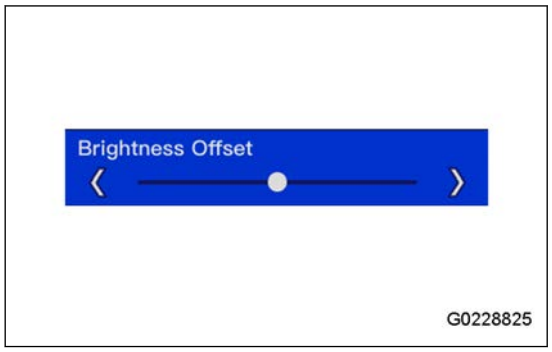

Color Level

Color Level is a parameter to adjust the colorfulness.

When you increase Color Level, the colors on the screen become more vivid.

When you decrease Color Level, the colors become weaker.

Adjust the slider to set.

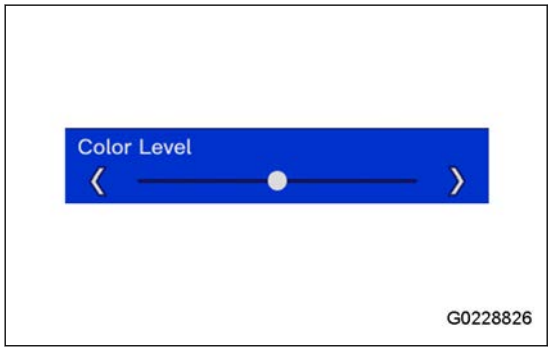

Sharpness

Tap Sharpness to turn ON/OFF Sharpness.

ON: Sharpness is set to ON. The outlines in the image are sharpened.

OFF: Sharpness is set to OFF.

REMARK

When Sharpness is set to ON, the image quality can deteriorate.

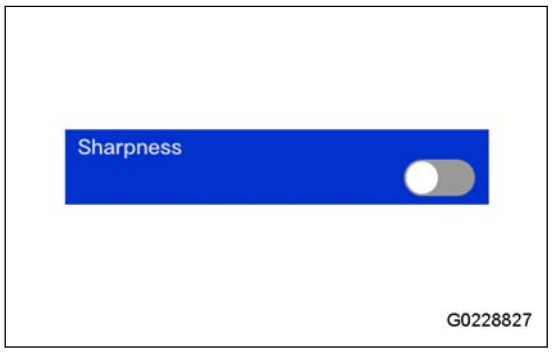

Clock Adjustment

You can change the setting of the clock shown on the standard screen of the machine monitor.

Tap “Operator and Monitor Setting” > “Clock Adjustment”, and the screen shown in the figure is shown. Select the item to be set and tap it.

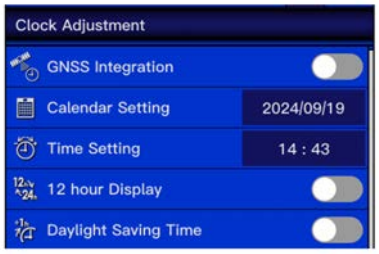

G0235877

The 5 items that follow can be changed.

- ON/OFF of GNSS Integration
- Calendar Setting
- Time Setting
- Change of 12H/24H Display
- ON/OFF of Daylight Saving Time

REMARK

After long-term storage, the 2 items of Calendar Setting and Time Setting are possibly reset. Adjust them again. When GNSS Integration is set to ON, the clock is automatically adjusted.

GNSS Integration Setting

Tap “Operator and Monitor Setting” > “Clock Adjustment” > “GNSS Integration” to turn it ON. The date and time on the machine monitor are set automatically in response to the GNSS clock.

REMARK

- When the machine is in the environment where the radio waves from GNSS cannot be received, such as inside of a building, the automatic setting function does not operate correctly in some cases.
- When you set “GNSS Integration” to ON, you cannot the menu items “Calendar Setting” and “Time Setting”.

Calendar Setting

Adjust the date of the machine monitor.

REMARK

When “GNSS Integration” is set to ON, you cannot select “Calendar Setting”.

1. Tap “Operator and Monitor Setting” > “Clock Adjustment” > “Calendar Setting”, and the screen shown in the figure is shown.
2. Tap the item to be changed from year (A), month (B), and day (C).

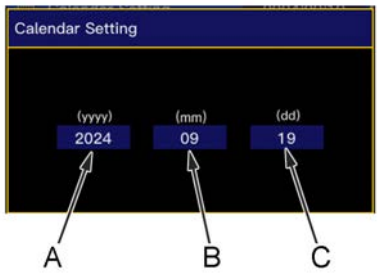

G0228829

3. Tap the Up and Down arrows to change the calendar.

   When you push and hold the arrows, the number changes continuously.

4. After you complete the changes, tap the checkmark button.

   REMARK

   If you tap the RETURN button, the screen goes back to “Operator and Monitor Setting” menu (g) screen. The setting contents are not reflected.
   If you tap the CLOSE button, the screen goes back to the standard screen. The setting contents are not reflected.

G0228830

Time Setting

Adjust the time of the machine monitor clock.

REMARK

When “GNSS Integration” is set to ON, you cannot select “Time Setting”.

1. Tap “Operator and Monitor Setting” > “Clock Adjustment” > “Time Setting”, and the screen shown in the figure is shown.
2. Tap the item to be changed from hour (A) and minute (B).

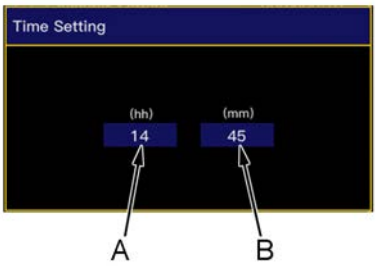

G0228831

3. Tap the Up and Down arrows to change the time.

   When you push and hold the arrows, the number changes continuously.

4. After you complete the changes, tap the checkmark button.

   REMARK

   If you tap the RETURN button, the screen goes back to “Operator and Monitor Setting” menu (g) screen. The setting contents are not reflected.
   If you tap the CLOSE button, the screen goes back to the standard screen. The setting contents are not reflected.

G0228832

Change 12H/24H Display Mode

Tap “Operator and Monitor Setting” > “Clock Adjustment” > “12 hour Display” to switch between 12-hour and 24-hour display modes.

ON: 12-hour display (AM/PM)

OFF: 24-hour display

Daylight Saving Time (Summer Time) Setting

Tap “Operator and Monitor Setting” > “Clock Adjustment” > “Daylight Saving Time” to turn “Daylight Saving Time” ON or OFF.

ON: The time display becomes 1 hour forward.

OFF: The set time is restored.

REMARK

Daylight saving time, or summer time, is the 1-hour forward adjustment of clocks to make good use of the day-time in summer.

Language Settings

You can change the language shown on the machine monitor.

The languages that can be selected are as follows.

Bulgarian, Czech, Danish, German, Greek, English, Spanish, Estonian, Finnish, French, Croatian, Hungarian, Icelandic, Italian, Japanese, Lithuanian, Latvian, Dutch, Norwegian, Polish, Portuguese, Romanian, Slovak, Slovenian, Serbian, Swedish, Turkish

1. Select “Operator and Monitor Setting” > “Language Setting/Language”. The screen in the figure is shown.
2. Tap the language that you want to see.

G0261370

Camera Position at Startup

You can set the camera image in one of the directions as a single camera image at the startup of the machine monitor.

- You can select one from Forward, Backward, Left, and Right cameras.
- When you select “Last Value”, the camera image shown at the end of the last time is shown.

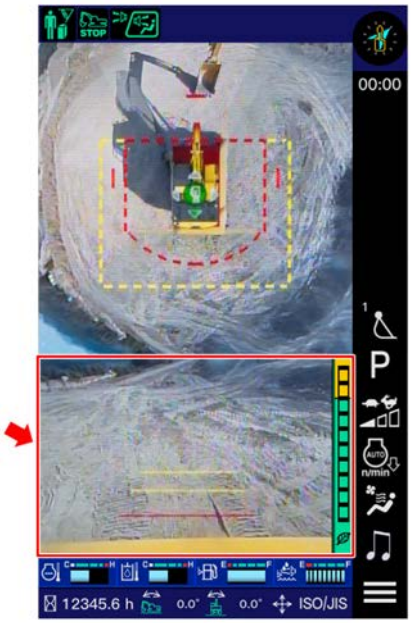

G0238556

1. Tap “Operator and Monitor Setting” > “Camera position at startup”, and the screen shown in the figure is shown.
2. Tap the camera to be shown at startup.

G0228834

Unit Selection

You can set the unit of the values shown on the machine monitor.

The units that can be set are as follows.

(a) Distance: You can select from “m” and “ft”. The factory default is “m”.

(b) Volume: You can select from “L” and “gal”. The factory default is “L”.

(c) Pressure. You can select from “MPa, kPa”, “kg/cm2”, and “psi”. The factory default is “MPa, kPa”.

(d) Weight: You can select from “t”, “kg”, and “lb”. The factory default is “kg”.

(e) Temperature: You can select from “°C” and “°F”. The factory default is “°C”.

1. Tap “Operator and Monitor Setting” > “Unit Selection”, and the screen shown in the figure is shown.
2. Select the item for which you want to change the setting. Tap the unit for display.

G0228835

Operator Authentication Setting

Tap “Operator and Monitor Setting” > “Operator Authentication Setting”, and the screen shown in the figure is shown. Select the item to be set and tap it.

You can turn ON/OFF the operator ID setting, manage operator IDs (add or change settings of the operator ID, etc.), change the logon setting (set guest IDs, change the operator ID holding time, etc.). For each setting item, see the description for each item.

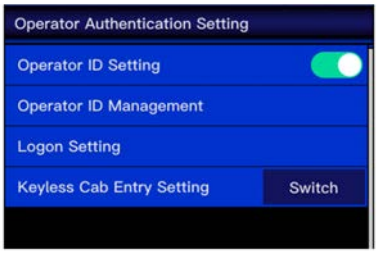

G0228836

Operator ID Setting

NOTICE

- **You can set “Operator ID Setting” to ON for higher security.**
  When you use the machine in an area where there is a danger of theft or vandalism, it is recommended to set “Operator ID Setting” to ON.
- **If you set “Operator ID Setting” to OFF, anyone will be able to set items only allowed for supervisors. Manage the machine carefully.**
- **If “Operator ID Setting” is set to OFF, set the battery disconnect switch to OFF and lock it after you complete the day's work.**
  For how to lock the battery disconnect switch, see “Operate Battery Disconnect Switch (3-170)”.

Tap “Operator and Monitor Setting” > “Operator Authentication Setting” > “Operator ID Setting” to turn ON/OFF Operator Authentication.

ON: Operator authentication is required at startup. For the operator IDs for which the authentication setting is individually set to OFF in the setting for each operator ID, operator authentication is not required.

OFF: The operator ID selection screen is bypassed at startup.

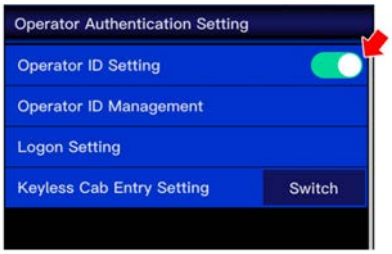

G0228837

Operator ID Management

You can add a new operator ID to the machine, change the setting of an operator ID registered to the machine, or delete it.

When “Operator ID Setting” is set to OFF, “Operator ID Management” cannot be selected.

Tap “Operator and Monitor Setting” > “Operator Authentication Setting” > “Operator ID Management”, and the screen shown in the figure is shown. Select the item to be set and tap it.

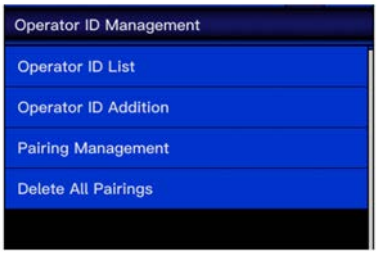

G0235878

When You Add New Operator ID

1. Tap “Operator and Monitor Setting” > “Operator Authentication Setting” > “Operator ID Management” > “Operator ID Addition”, and the screen shown in the figure is shown.
2. Input or select information for the operator to be added.
3. After the setting of the necessary items is completed, tap the checkmark button (1).

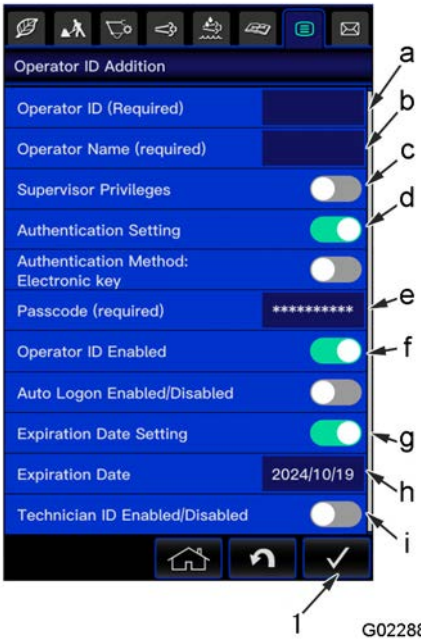

The items to be set are as follows.

(a) Operator ID (Required)

The operator ID to be added must be input.

You cannot add the same ID as an operator ID registered to the machine before.

Also, a registered operator ID cannot be changed after that.

(b) Operator Name (Required)

You must input the operator name to be added.

You can register the same operator name as the one registered to the machine before.

(c) Supervisor Privileges

Set whether to require supervisor privileges for important management operations.

ON (green): Supervisor privileges are required.

OFF (gray): Supervisor privileges are not required.

(d) Authentication Setting

Set whether to require authentication at operator ID selection.

ON (green): The operator authentication is required.

OFF (gray): The operator authentication is not required. When you tap the operator name at startup, the authentication is bypassed, and you can log on.

NOTICE

You can set the Authentication Setting for the operator ID to ON for higher security.
When you use the machine in an area where there is a danger of theft or vandalism, it is recommended to set the operator ID authentication setting to ON.

(e) Passcode (Required)

Set the operator authentication passcode. The default is “012345”. Set the passcode with a number between 4 and 10 digits. When the Authentication Setting is enabled, a passcode must be set.

(f) Operator ID Enabled

The setting can be disabled temporarily without the deletion of the operator ID.

ON (green): Operator ID is valid. The operator name is shown at startup.

OFF (gray): The operator ID is invalid. The operator name is not shown at startup.

(g) Expiration Date Setting

You can set the expiration date of the operator ID.

ON (green): The expiration date is valid.

OFF (gray): The expiration date is invalid.

When the expiration date is set to Valid, the expiration date screen (h) is shown.

After the set expiration date, the ID cannot be selected on “Operator ID List” screen at the machine monitor startup.

REMARK

Even if the operator ID is expired, you can set the expiration date again or set the Expiration Date Valid/Invalid setting to Invalid to select the operator ID on “Operator ID List” screen at startup.

(h) Expiration Date

Set the expiration date of the operator ID to be registered. It is shown only when the Expiration Date Valid/Invalid setting is set to Valid.

(i) Technician ID Enabled/Disabled

Enable the technician ID only when you add an operator ID for a technician.

ON (green): Technician ID is Enabled.

OFF (gray): Technician ID is Disabled.

REMARK

- You can change the technician ID setup only when you add a new operator ID. You cannot change it after that.
- With an operator ID with which a technician ID is activated, there is a possibility that services by KOMTRAX cannot be done correctly.
- The technician ID Enable/Disable setting is used to distinguish between serviceable status by technicians (inspection, maintenance, etc.) and serviceable status by operators when the customer manages serviceable status, fuel consumption, and machine errors for each operator with the operator identification function.

When You Change Contents of Operator ID

1. Tap “Operator and Monitor Setting” > “Operator Authentication Setting” > “Operator ID Management” > “Operator ID List”, and the screen shown in the figure is shown.
2. Tap the operator ID to be changed from the shown “Operator ID List”.

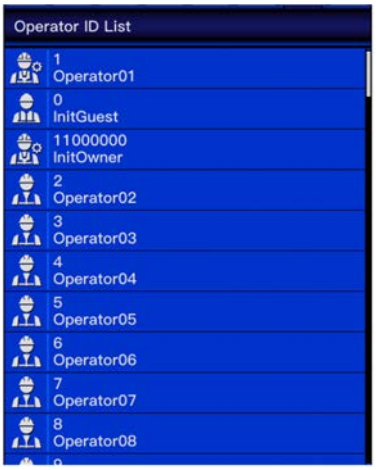

G0228842

3. Change the registration contents of the operator ID.

   For details of each item, see “When You Add New Operator ID (3-105)”.

   REMARK

   You can set only the items that can be changed.
4. After the setting of the necessary items is completed, tap the checkmark button (1).

   NOTICE

   When you turn the battery disconnect switch to the OFF position for the first time after the setting, turn the starting switch to the OFF position. Make sure that the system operating lamp does not come on. Then, turn the battery disconnect switch key to the OFF position. If this is not done, the setting will possibly not be saved.

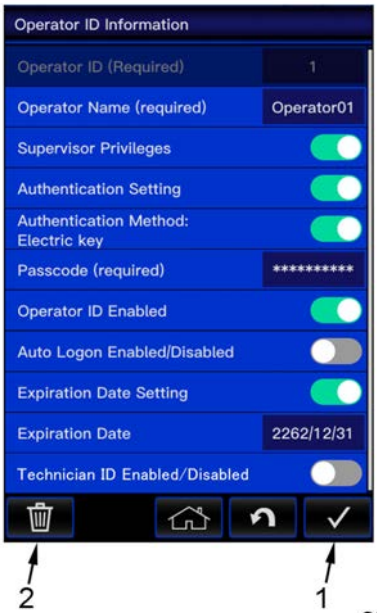

G0228843

When You Delete Contents of Operator ID

1. Tap “Operator and Monitor Setting” > “Operator Authentication Setting” > “Operator ID Management” > “Operator ID List”, and the screen shown in the figure is shown.
2. Tap the operator ID you wish to delete from the shown “Operator ID List”.

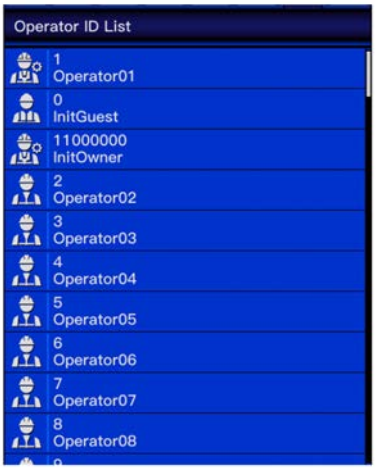

G0228842

3. Tap the delete button (2).

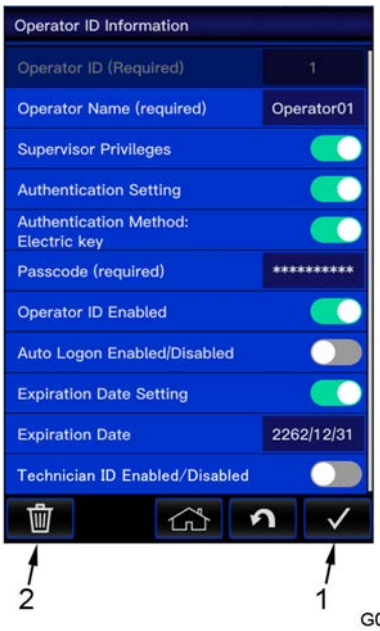

G0228843

4. Tap the checkmark button on the Confirmation Screen. The operator ID is deleted.

   REMARK

   - You cannot delete the default operator ID registered to the machine.
   - The operator ID currently logged on cannot be deleted.

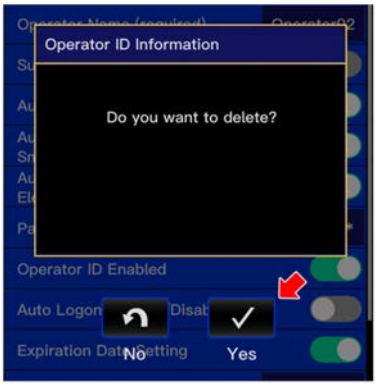

G0228844

Add Guest ID

You can set guest IDs. When the guest ID setup is ON, “Guest” users are shown on the “Operator ID List”.

REMARK

The initial passcode “012345” is set to the guest ID. When you add a guest ID, change the setting of the guest ID. For details, see “Operator ID Management (3-104)”.

1. Tap “Operator and Monitor Setting” > “Operator Authentication Setting” > “Logon Setting”, and the screen shown in the figure is shown.
2. Tap “Guest ID Setup”.

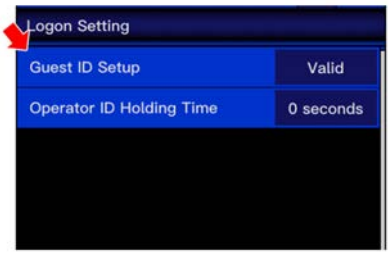

G0228856

3. Select the setting of guest ID.

   ON: Guest IDs can be added and you can select them on the Authentication Screen.

   OFF: Guest IDs are not shown on the Authentication Screen.

G0228857

Set Operator ID Holding Time

You can set the operator ID holding time. If the starting switch was turned to the OFF position but turned again to the ACC or ON position in the operator ID holding time, you can log on without authentication, such as passcode entry, even if the operator authentication setting is enabled.

NOTICE

The engine can be started without the operator authentication in the operator ID holding time. Set the operator ID holding time based on the danger of theft or vandalism.

1. Tap “Operator and Monitor Setting” > “Operator Authentication Setting” > “Logon Setting”, and the screen shown in the figure is shown.
2. Tap “Operator ID Holding Time”.

3. Tap Operator ID Holding Time item you wish to set.

   NOTICE

   When you turn the battery disconnect switch to the OFF position for the first time after the setting, turn the starting switch to the OFF position. Make sure that the system operating lamp does not come on. Then, turn the battery disconnect switch key to the OFF position. If this is not done, the setting will possibly not be saved.

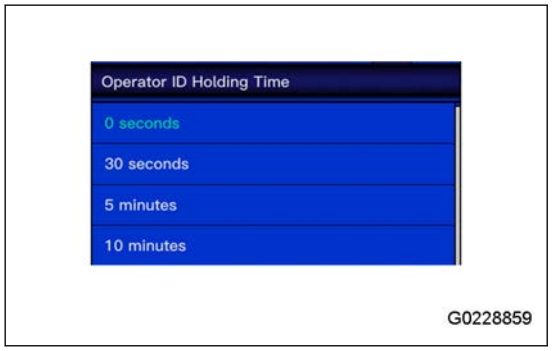

Supervisor Setting

In the Supervisor Mode, you can limit each function and mode. This setting is applied regardless of the operator ID you used for logon.

1. Tap “Operator and Monitor Setting” > “Supervisor Setting”, and the screen shown in the figure is shown.

   REMARK

   When you log on with an ID other than the supervisor, you need to input the supervisor setting passcode to do the setting in supervisor setting.
2. The setting screen is shown. Select and set the item to be set.

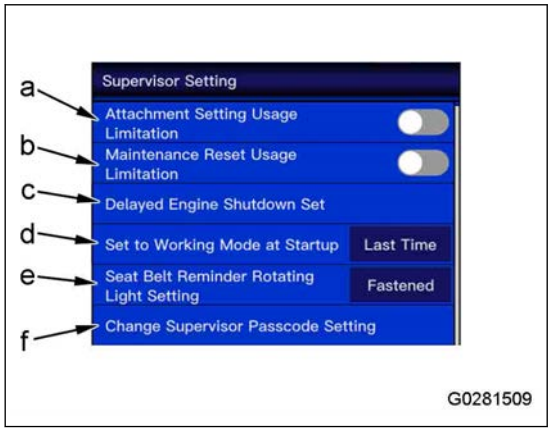

(a) Attachment Setting Usage Limitation

You can change the setting of the Attachment Setting Usage Limitation.

ON: When you log on with an ID other than the supervisor, the Supervisor Setting Passcode is required to change attachment settings.

OFF: You can change attachment settings regardless of the ID you used for logon.

REMARK

Even if you use the Attachment Setting Usage Limitation, some items can be changed from the ICT monitor. To limit the usage of the ICT monitor, limit the attachment menu from the Supervisor in the ICT monitor tool.

For the attachment settings, see “Attachment Icon (3-41)”.

(b) Maintenance Reset Usage Limitation

You can change the setting of the Maintenance Reset.

ON: When you log on with an ID other than the supervisor, the Supervisor Setting Passcode is required to do the Maintenance Reset.

OFF: You can do the Maintenance Reset regardless of the ID you used for logon.

For the maintenance reset, see “Maintenance (3-88)”.

(c) Delayed Engine Shutdown Set

When you tap “Delayed Engine Shutdown Set”, the setting screen is shown.

When you tap “Delayed Engine Shutdown Set” (g) and turn on the setting fixation, the settings are fixed.

For details of the setting, see “Delayed Engine Shutdown Setting (3-65)”.

For the delayed engine shutdown function, see “Delayed Engine Shutdown System (3-252)”.

G0281510

NOTICE

When you turn the battery disconnect switch to the OFF position for the first time after the setting, turn the starting switch to the OFF position. Make sure that the system operating lamp does not come on. Then, turn the battery disconnect switch key to the OFF position. If this is not done, the setting will possibly not be saved.

(d) Set to Working Mode at Startup

The working mode at startup can be set. Tap “Set to Working Mode at Startup” (d) and select the item to be set.

The working modes that can be set are as follows.

Set to Last Working Mode: The mode at startup is the one at the previous end.

Set to P+ Mode: The mode is P+ Mode at startup.

Set to P Mode: The mode is Power Mode at startup.

Set to E Mode: The mode is E Mode at startup.

Set to L Mode: The mode is fine control mode at startup.

Variable: The working mode at startup is not set. The working mode at startup can be set for each operator.

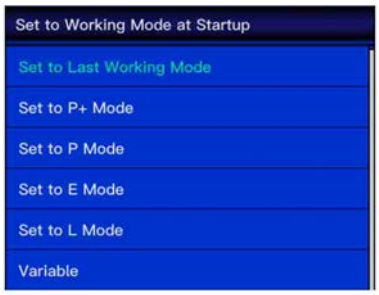

G0281511

For details about the working mode, see “How to Operate Work Mode (3-271)”.

(e) Seat Belt Reminder Rotating Light Setting

You can set the condition that the seat belt reminder rotating light (if equipped) operates.

When you tap “Seat Belt Reminder Rotating Light Setting” (e), the setting screen is shown.

Rotating light on when seat belt is fastened: The revolving lamp operates when the seat belt is fastened.

Rotating light on when seat belt is unfastened: The revolving lamp operates when the seat belt is not fastened.

Rotating Light Stop: The seat belt revolving lamp does not operate.

G0247359

(f) Change Supervisor Passcode Setting

You can change the administrator setting passcode.

The default passcode is “000000”.

When you tap “Change Supervisor Passcode Setting” (f), the Supervisor Setting Passcode entry screen is shown.

Enter the new Supervisor Setting Passcode. Tap the OK button.

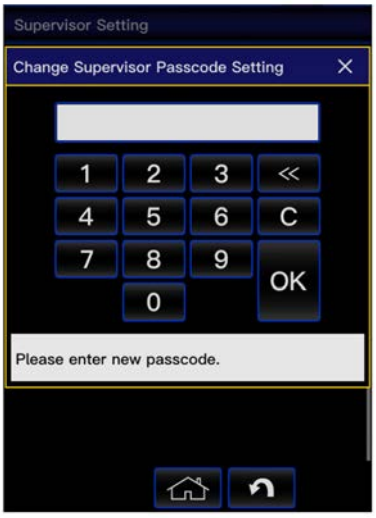

G0228866

NOTICE

- **Change from the initial passcode is recommended.**
- **Write down the changed new passcode and keep it. If the passcode is not known, the only way to make sure it is to ask the person who entered it.**
- **Be sure to tell the passcode only to those who need to know.**
- **Set the passcode to a value which cannot be easily guessed by third parties.**

Log Off

You can log off to change the operator ID at operator shifts.

REMARK

To change the operator ID, the engine must be stopped.
Before you log off, stop the engine. For details, see “How to Stop Engine (3-251)”.

1. Tap “Operator and Monitor Setting” > “Log off”, and the screen shown in the figure is shown.
2. Tap the checkmark button.

   REMARK

   If you select an operator from “Operator ID List”, which is shown after the Logoff, you can log on as the selected operator.

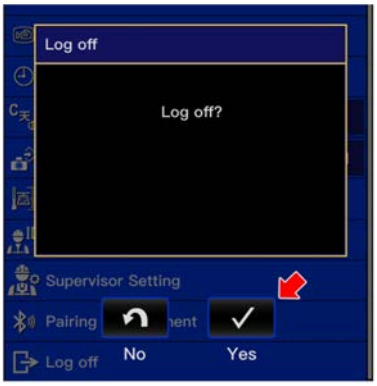

G0228867

Message Display

You can see the messages from your Komatsu distributor with the “Display Message” menu (h).

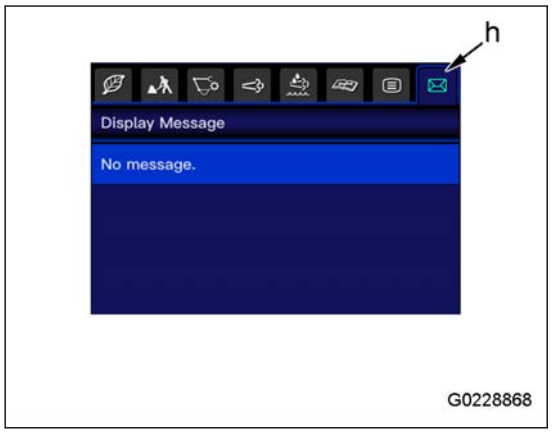

REMARK

- If there is a message before the expiry date that is set to be shown when the starting switch is turned to the OFF position by its sender, the message is shown on the End screen when the starting switch is turned to the OFF position. The message state, though, will not become a read message.
- The message will be deleted when its expiration date comes or when a new message is received.

Check of unread messages

If there is an unread message, the menu icon (1) is shown in green highlight.

Tap the menu icon in green highlight for a check of messages.

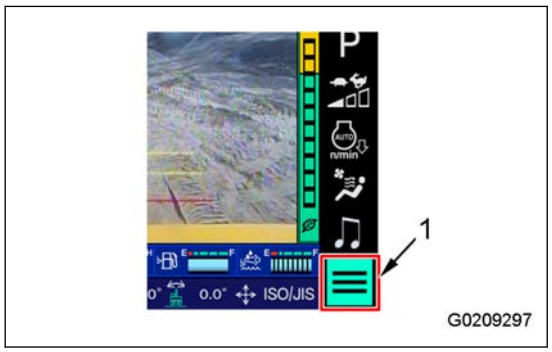

REMARK

The menu icon is possibly not shown in green highlight even if there is a new message when other functions are prioritized. This is not a problem.
In this case, see "Check of read messages" to do the message check.

Check of read messages

When you tap the “Display Message” menu tab (h), you can see the messages.

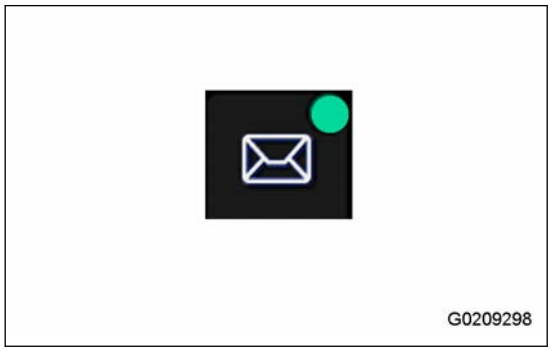

REMARK

If the tab (h) is shown with a green dot as shown in the figure, there is an unread message.

Others

Clock

The clock shows the current time.

G0238557

- 12-hour display

G0209302

- 24-hour display

G0209303

REMARK

- If the battery is disconnected for a long period for storage or such, the time information can be lost.
- For the setting or correction of the time and changeover of the 12/24 hour display mode, see “Clock Adjustment (3-99)”.

Service Meter

The service meter shows the total operation hours of the machine.

While the engine is in operation, the service meter increases even if the machine does not move. The service meter increases by 0.1 for 6 minutes of operation regardless of the engine speed.

REMARK

When you tap the service meter, the service meter changes to the fuel consumption gauge.
When you tap the fuel consumption gauge, the fuel consumption gauge changes to the service meter.

G0209304

Fuel Consumption Gauge

The fuel consumption gauge shows the average fuel consumption of the machine.

(A): Shows the average fuel consumption of a day (from 0:00 a.m. of the day to 0:00 a.m. of the next day).

(B): Shows the split fuel consumption during measurement.

(C): Shows that the split measurement is paused.

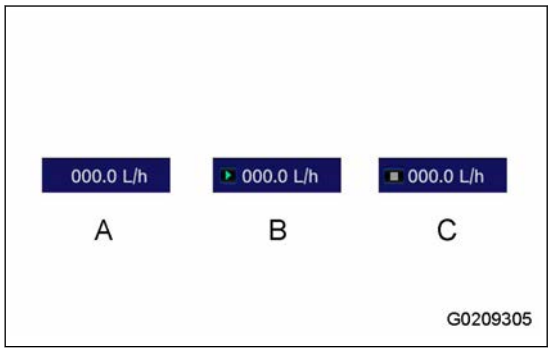

REMARK

You can change the display of the fuel consumption gauge between the average fuel consumption a day and the average fuel consumption during a selected period (split fuel consumption).

ECO Gauge

The ECO gauge shows the instantaneous fuel consumption.

The instantaneous fuel consumption shows the fuel consumption ratio at each moment, and changes by the work load and engine speed.

When the gauge is in the green range (A), the instantaneous fuel consumption is at a good to medium level.

When the gauge is in the yellow range (B), the instantaneous fuel consumption is at a bad level.

The show/hide of the ECO gauge can be changed. See “Change Display/Non-Display of ECO Gauge (3-56)” to change it.

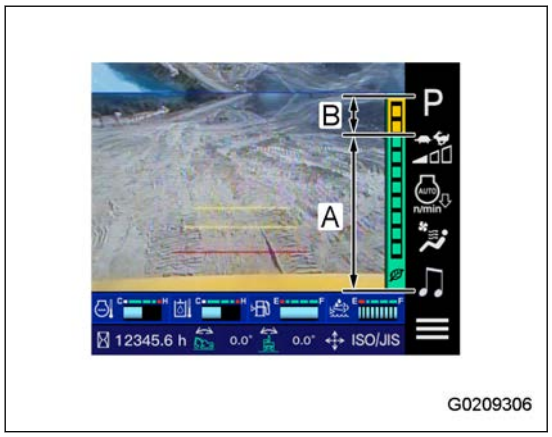

REMARK

Even if the gauge is in the yellow range, this is not a problem for the machine. Even so, to protect the global environment, operations must be made in an energy-saving manner. Try to reduce engine power to the degree that it does not interfere with work and stay in the green range. Fuel consumption can also be decreased by a small number of times of machine operation. Adjustment of the work procedure is an effective method for it.

Level Indicator

WARNING

- **Inclination angles shown on the machine monitor while the machine operates, such as during swing, can be used as a rough reference.**
- **Stick to the precautions in “Precautions When Operating on Slopes (2-36)” and “Precautions When You Work on Slope (3-280)”.**

The level Indicator shows the inclination angle of the machine on the machine monitor.

(A): Inclination angle in the forward and rearward directions with respect to the upper structure

(B): Inclination angle in the right and left directions with respect to the upper structure

The icons (C) and (D) change in response to the inclination angle.

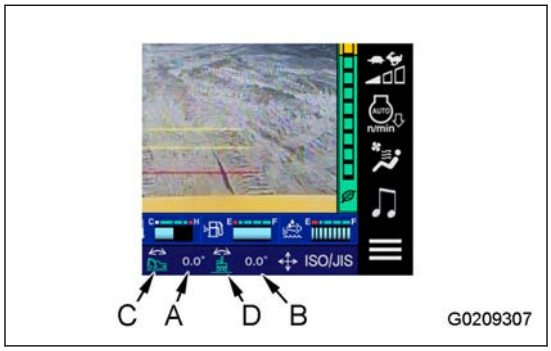

Slope	Icon (C)	Slope	Icon (D)
Forward down slope	G0209308	Left down slope	G0209311
Level	G0209309	Level	G0209312
Forward up slope	G0209310	Right down slope	G0209313

REMARK

If an abnormal inclination angle is sensed, the icons (C) and (D) are shown in red. The inclination angle is not shown. The sensor can be defective. Consult your Komatsu distributor for repair.

ECO Guidance

Guidance for energy saving operation to decrease the fuel consumption can be shown during operation.

You can see the ECO Guidance display history from the User Menu.

For the check method, see “Examine ECO Guidance Record (3-53)”.

The details of the guidance are as follows.

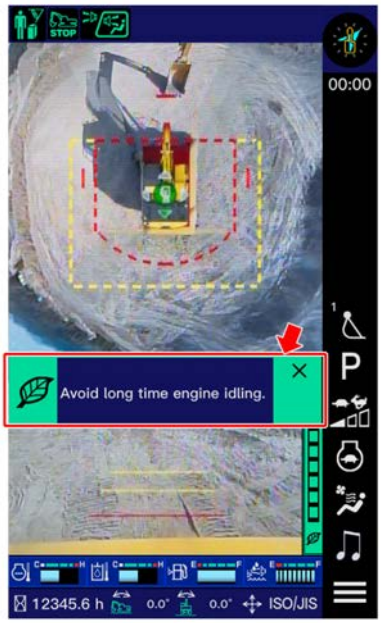

G0238583

Idling Stop Guidance

If no operation is done for 5 minutes or more while the engine runs idle, the idling stop guidance is shown on the machine monitor. When you wait for the work or stop the operation for a short period, stop the engine to decrease fuel consumption.

The idling stop guidance goes off if you operate a lever or tap the CLOSE button.

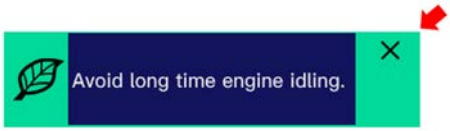

G0228870

Guidance to Avoid Hydraulic Relief

If a hydraulic relief continues for 3 seconds or more during operation, the guidance to avoid hydraulic relief is shown on the machine monitor.

The guidance to avoid hydraulic relief goes off after it is shown for 10 seconds or more, or when you tap the CLOSE button.

G0228871

Economy Mode Recommended Guidance

If light load work continues for 10 minutes or more when in P or P+ mode , the E Mode Recommended guidance is shown. During light load work, set the working mode to the E mode and you can decrease the fuel consumption.

The E Mode Recommended guidance goes off after it is shown for 10 seconds or more, or when you tap the CLOSE button.

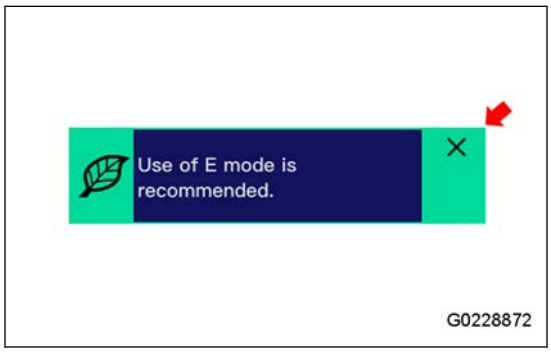

Travel Partial Recommendation Guidance

If the machine travel continues for 2 minutes or more when the travel mode is set to Hi, and the fuel control dial is at the MAX position, the Travel Partial Recommendation Guidance is shown. When you travel the machine for a long time, you can save fuel if you turn down the fuel control dial.

The Travel Partial Recommendation Guidance goes off after it is shown for 10 seconds or more, or when you tap the CLOSE button.

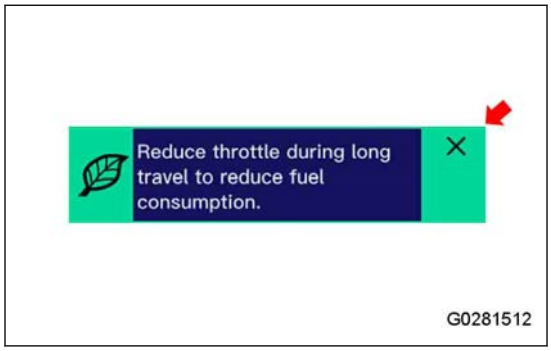

Fuel Low Level Guidance

If the operation time calculated based on the current fuel level and the latest average fuel consumption becomes below 8 hours, the Fuel Low Level Guidance is shown.

The Fuel Low Level Guidance goes off after it is shown for 10 seconds or more, or when you tap the CLOSE button.

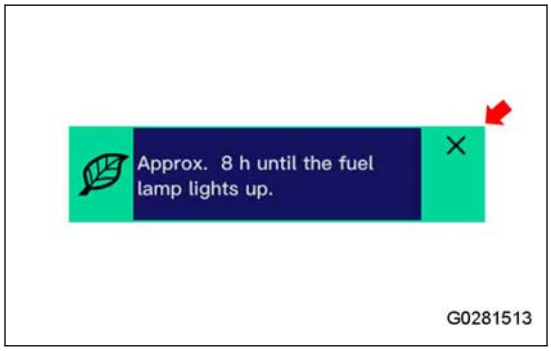

Other Guidance

Guidance of Engine Stop Operation During Aftertreatment Device Regeneration

Immediately after you start the aftertreatment devices regeneration, information about the engine stop operation during the aftertreatment devices regeneration is shown. If you need to stop the engine during regeneration of the aftertreatment devices, stop only the aftertreatment devices regeneration first. Then stop the engine after you run it at low idle for approximately 5 minutes.

The guidance of engine stop operation during aftertreatment devices regeneration goes off after it is shown for 10 seconds or more, or when you tap the CLOSE button.

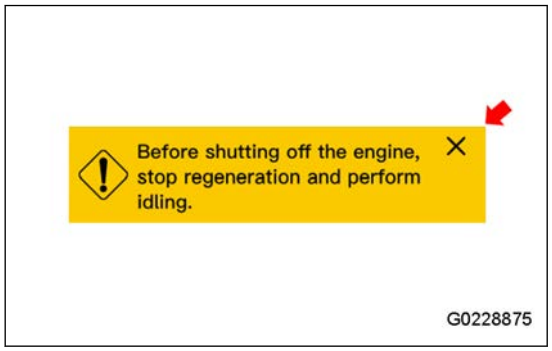

DEF Low Level Guidance

If available time estimated from the current DEF level and the latest average DEF consumption is shorter than 8 hours, the low DEF level message is shown.

When you push the CLOSE button, or after 10 seconds or more, the low DEF level message goes off.

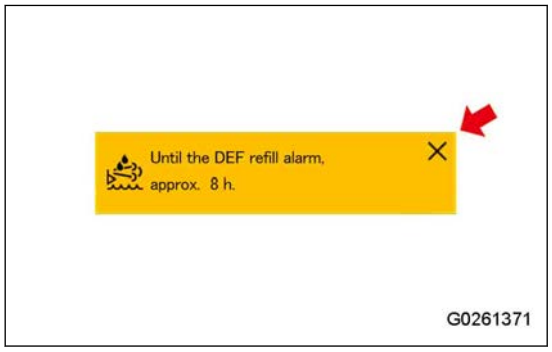

Recommendation Guidance of Manual Stationary Regeneration

If a specified quantity of soot accumulates in the KDPF, a manual stationary regeneration recommendation guidance is shown.

The manual stationary regeneration recommendation guidance goes off after it is shown for 15 seconds or more, or when you push the CLOSE button.

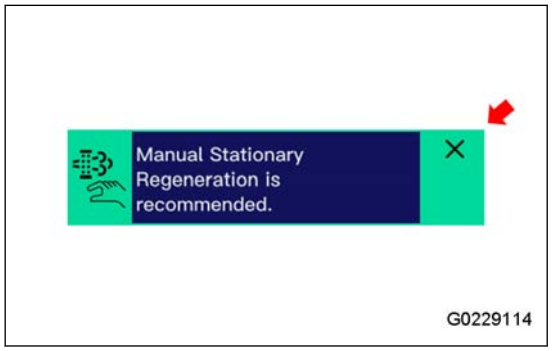

ICT Monitor

(If equipped)

WARNING

- **To prevent unexpected accidents, do not operate the ICT monitor during the operation of the work equipment. Also, do not look at the ICT monitor more than necessary during the work.**
- **The machine images shown on the ICT monitor are only representations. The check on the image shown on the ICT monitor is not sufficient to secure the safety around the machine. See the area around the machine with your own eyes.**

The ICT monitor is used for different extended functions, such as payload meter and 3D machine control. You can operate the control box with the touch panel. Each setting is set on this monitor.

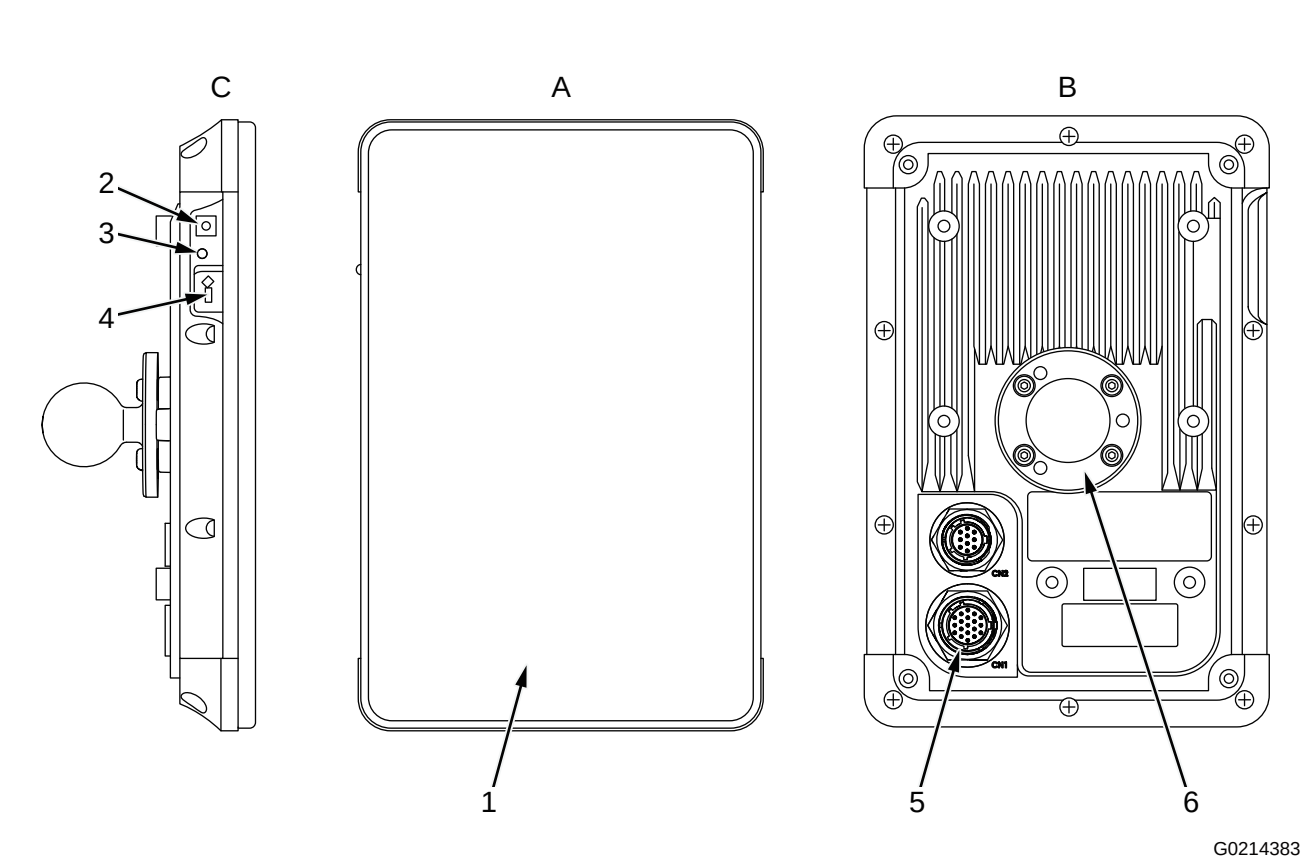

(A) Front of ICT monitor

(B) Rear of ICT monitor

(C) Side of ICT monitor

(1) Touch panel

(2) Power supply (push and hold for 3 seconds or more) / reset (push and hold for 15 seconds or more)

(3) Startup state LED

(4) USB port (for data import and export with USB flash drive)

(5) Connector port

(6) Fixing joint

Touch Panel

This machine uses a capacitive touch panel. When you operate the touch panels with hands that wear gloves, the reaction becomes degraded.

Power Supply/Reset Button

The result of the operation is dependent on how long you push and hold the button.

Power ON/OFF: Push and hold the button for 3 seconds or more but less than 15 seconds.

Reset: Push and hold the button for 15 seconds or more.

USB Port

Insert a USB flash drive into the USB port (4) to import/export data to/from the ICT monitor.

When the USB port is not used, close it with the cap to prevent entry of water and dirt.

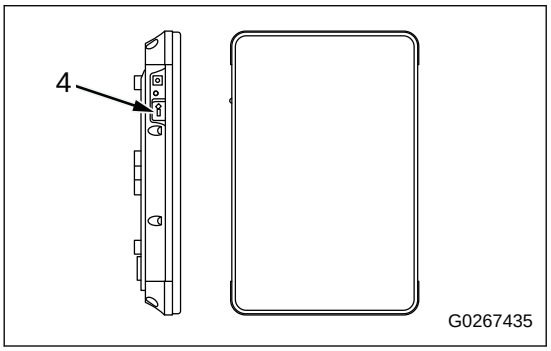

REMARK

- The USB flash drive with password lock function cannot be used.
- Do the virus scanning for the USB flash drive. Make sure that it is free from virus, and then use it.
- Data must be saved to the root directory of the USB flash drive.
  If the data is saved in a folder made in the USB flash drive (sub directory), the ICT monitor cannot recognize the data.
- If the internal memory of the ICT monitor is full of data, the ICT monitor possibly does not operate correctly. Delete the data that is not necessary regularly.
- If the free capacity of internal memory becomes low, a warning message is shown. In this case, delete files that are not necessary.
- Be careful the ICT monitor does not to get infected with a virus through the USB flash drive.
  Take measures such as a USB flash drive with pre-installed antivirus software or a virus check on a computer.

How to Remove ICT Monitor

⚠ WARNING

Before you remove the ICT monitor, lower the work equipment onto level ground, and set the battery disconnect switch to the OFF position.

NOTICE

- **After you work in the rain or a humid area, dry up the ICT monitor before you store it. If it is stored with moisture, dew drop occurs in it, and it can cause failure or malfunction. Also, if the inside of the case, etc., is wet, dry it up before you store the device.**
- **When you carry or transport the ICT monitor, use cushions to avoid shocks to it as much as possible. Strong shocks can cause failure or malfunction.**
- **The ICT monitor can fall by its own weight when you loosen the mount of ICT monitor. Hold the bottom of the ICT monitor securely, and loosen the handle (A) of the mount.**
- **Hold the bottom of the ICT monitor tight when you install the mount of ICT monitor. Tighten the handle (A) of the mount fully, and do not release the ICT monitor until the position is secured. If the handle (A) is not tightened sufficiently, the ICT monitor can fall out and be damaged.**

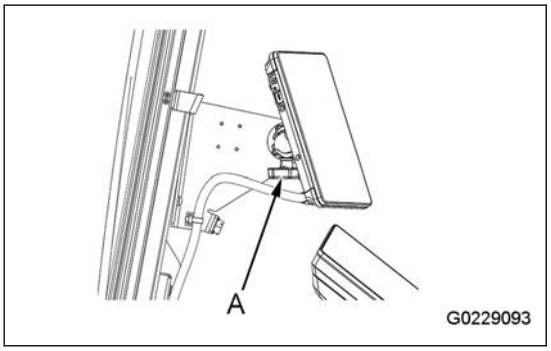

- **Do not adjust the position of the ICT monitor while the handle (A) of the mount is tightened. It can cause damage to the ICT monitor or mount.**

1. Lower the work equipment to the ground on a level area. Operate the operating part (g) of the lock lever to set it to the LOCK position (L).
2. Stop the engine.
3. Set the battery disconnect switch to the OFF position.

   For the operation of the battery disconnect switch, see “Battery Disconnect Switch (3-169)”.

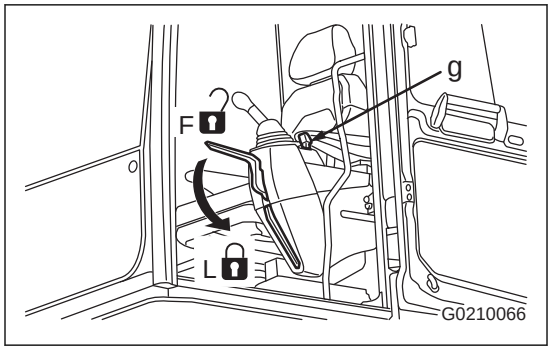

REMARK

Do not remove or install the connector while the electric power is supplied. The electronic devices can be damaged.
The power for the ICT monitor is supplied directly from the battery through a fuse to keep the ICT monitor in operation even if the engine stops.
Accordingly, a large current (surge current) can occur when the connector is disconnected or connected even if the starting switch is not in the ON position.

4. Hold the bottom of the ICT monitor securely. Loosen the handle (A) of the mount. Move the ICT monitor toward the rear of the machine.

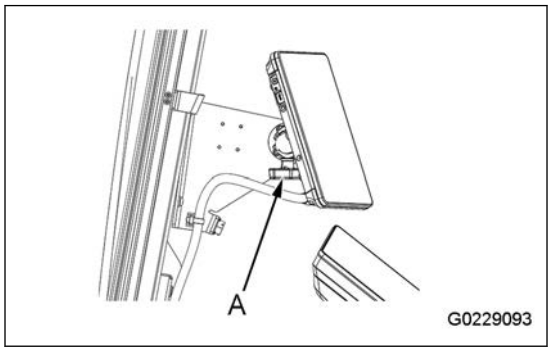

5. Turn the ring of the connector on the back of the ICT monitor counterclockwise to disconnect the connector (B).

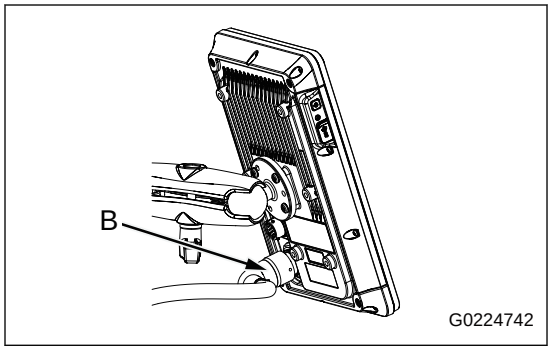

REMARK

When you disconnect the connector (B), hold the ring as shown in the figure so you can easily turn it.

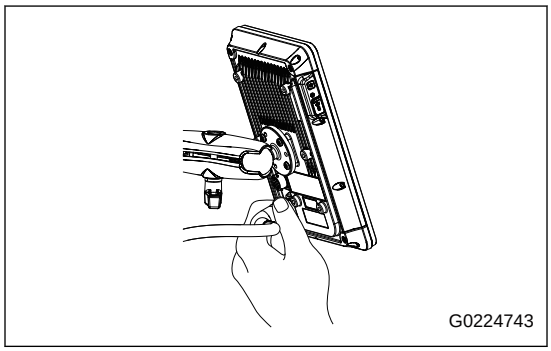

6. Fix the removed connector to the bracket (C) while you turn the ring of the wiring harness connector clockwise.

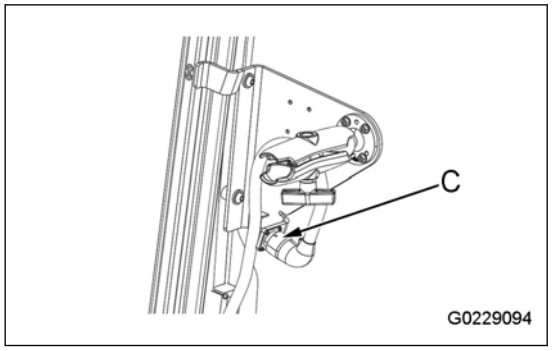

7. While you securely hold the ICT monitor to prevent fall, turn the handle (A) counterclockwise to loosen the mount until the ball (D) on the back of the ICT monitor comes off the mount.

   The handle (A) of the mount must be at the bottom.

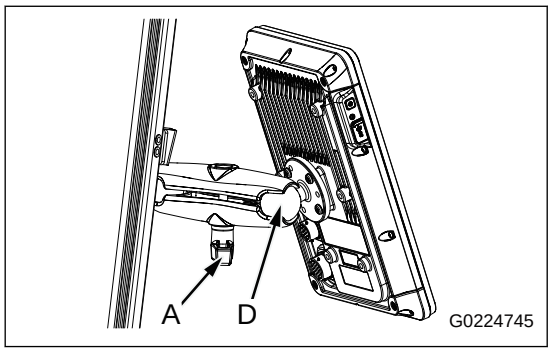

How to Install ICT Monitor

WARNING

Before you install the ICT monitor, lower the work equipment onto level ground, and set the battery disconnect switch to the OFF position.

1. Lower the work equipment to the ground on a level area. Operate the operating part (g) of the lock lever to set it to the LOCK position (L).
2. Stop the engine.
3. Set the battery disconnect switch to the OFF position.

   For the operation of the battery disconnect switch, see “Battery Disconnect Switch (3-169)”.

   REMARK

   Do not remove or install the connector while the electric power is supplied. The electronic devices can be damaged.
   The power for the ICT monitor is supplied directly from the battery through a fuse to keep the ICT monitor in operation even if the engine stops.
   Accordingly, a large current (surge current) can occur when the connector is disconnected or connected even if the starting switch is not in the ON position.

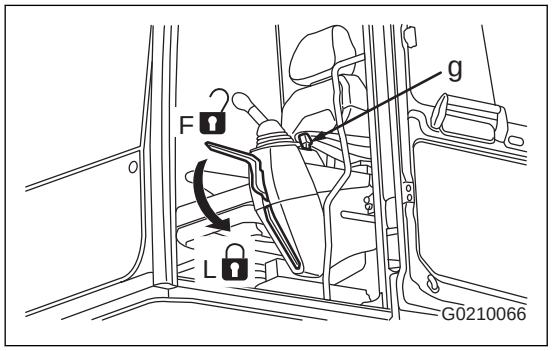

4. Insert the cab fixing ball (C) and the ball (D) on the back of the ICT monitor into the mount (B). Turn the handle (A) of the mount (B) clockwise to tighten and fix the mount.

   The handle (A) of the mount must be at the bottom.

   1) Install the mount to let its slits be at the sides and in horizontal directions.
      - In this position, the mount gives maximum holding force against the direction of gravity.
      - There will be sufficient space below the handle (A) to tighten it.
   2) Fix the mount perpendicular to the ball bracket (C).

      Fix it perpendicular to the right side glass.
   3) Retighten 2 to 3 times while you insert looseness checks.

      Do this in the sequence of: “Tighten → looseness check → tighten → looseness check → tighten”...

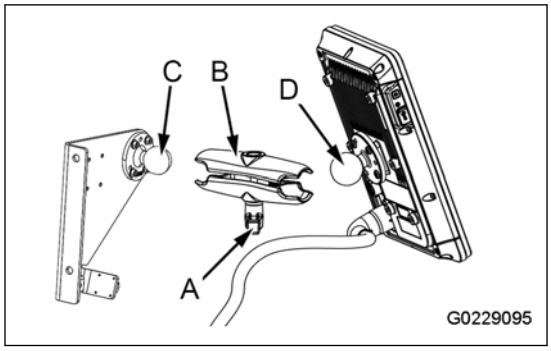

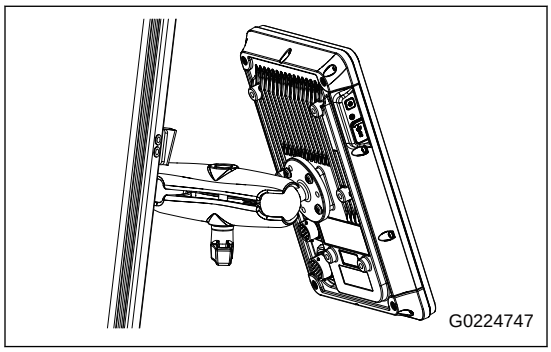

REMARK

If the mount is not fixed as shown above, it loosens easily. Retighten the mount regularly to prevent looseness.

5. Turn the ring of the wiring harness connector counterclockwise to remove the wiring harness connector from the bracket.

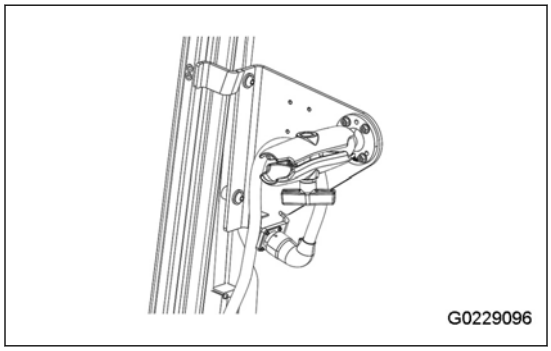

6. Turn the ring of the wiring harness connector clockwise to install it to the ICT monitor.

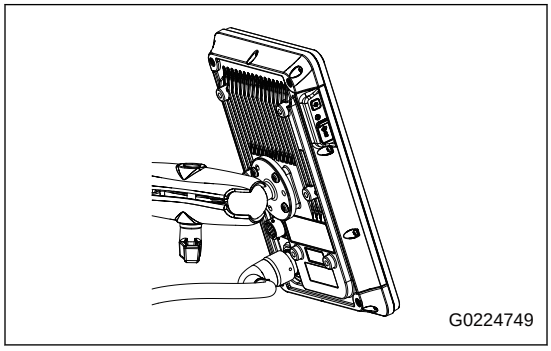

7. While you hold the wiring harness connector (1), turn the ring (2) clockwise until it is locked with a “Click” sound.

   Make sure that the connector is connected securely.

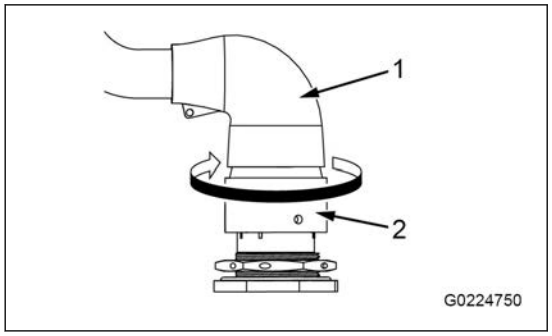

How to Adjust ICT Monitor Position

⚠ WARNING

- **Before you adjust the position of the ICT monitor, lower the work equipment to the ground on a level area. Stop the engine. Make sure that the power supply for the ICT monitor is shut off.**
- **When you adjust the position of the ICT monitor, be sure to set the lock lever to the LOCK position. If you accidentally touch the control lever or control pedal while the lock lever is in the FREE position, it can cause serious personal injury.**

NOTICE

- **The ICT monitor can fall by its weight when you loosen the mount of the ICT monitor. Hold the bottom of the ICT monitor securely when you loosen the handle (A) of the mount.**
- **Hold the bottom of the ICT monitor tight when you install the mount of ICT monitor. Tighten the handle (A) of the mount fully, and do not release the ICT monitor until the position is secured.**
  If the handle (A) is not tightened sufficiently, the ICT monitor can fall out and be damaged.
- **Do not adjust the position of the ICT monitor while the handle (A) of the mount is tightened. It can cause damage to the ICT monitor or mount.**

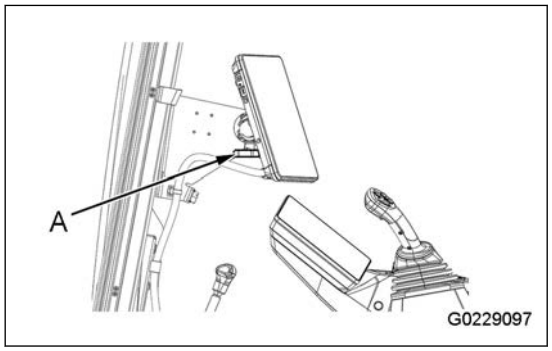

1. Lower the work equipment to the ground on a level area. Operate the operating part (g) of the lock lever to set it to the LOCK position (L).
2. Stop the engine.

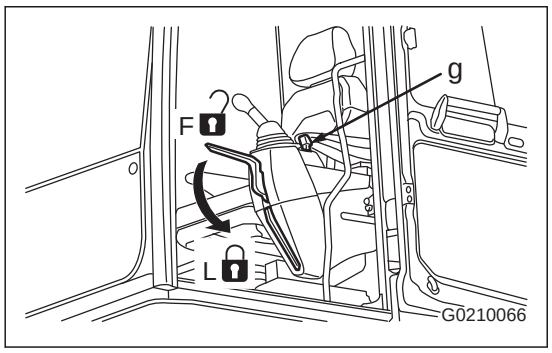

3. Turn the handle (A) of the mount to loosen the mount. Adjust the ICT monitor to a position that is easy to see. Tighten the mount.

   Adjust the ICT monitor to a position where it does not interfere with the machine monitor. If the seat is adjusted forward, the machine monitor possibly moves up and interferes with the ICT monitor when you move from the operator seat. When you move from the operator seat, move the seat rearward. Or, move the ICT monitor up and secure it.

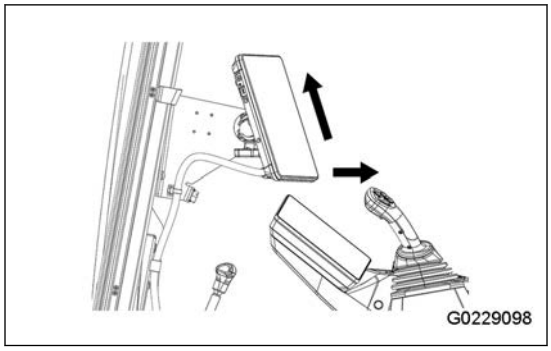

REMARK

If it is not sufficient only by the adjustment of the ICT monitor position, slide the overall seat and adjust the position of the right work equipment control lever. For the adjustment, see “How to Adjust Operator Seat (3-217)”.

- The ICT monitor will be easy to see when it is fixed at the position shown in the figure.
  It will not interfere with the machine monitor, and forward visibility will also be good. This is the optimum position.

  Mounting position (b): 95 mm {3.7 in}

  Mounting position (c): 135 mm {5.3 in}

  Mounting position (d): 155 mm {6.1 in}

  Mounting position (e): 263 mm {10.4 in}

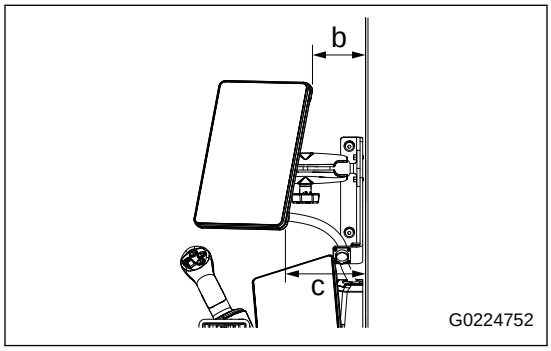

- If it is fixed in accordance with the installation procedure, it will be in this position approximately.
  This position is only a rough target. It is not necessary to stick to it.

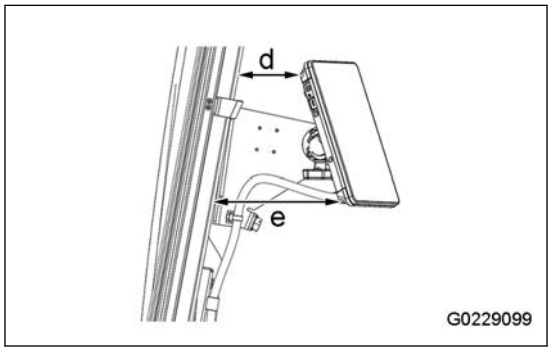

How to Start ICT Monitor

The power supply of the ICT monitor operates in conjunction with the machine key switch.

NOTICE

Do not turn the starting switch to the OFF position before the startup of the ICT monitor is completed. This can cause failure of the ICT monitor. Before you turn the starting switch to the OFF position, make sure that the startup of the ICT monitor is completed.
Do not turn the starting switch to the ACC or ON position while the ICT monitor is in the shutdown phase after the starting switch is turned to the OFF position. Also, do not do the starting switch ON/OFF operations continuously. Such operations can cause failure of the ICT monitor.
If a software update starts when the starting switch is turned to the ACC or ON position, do not operate the machine. Wait until the update is completed. The working screen is shown after approximately 15 minutes.

REMARK

The ICT monitor can be shut down from the power button on the side while the starting switch is in the ACC or ON position. To start the ICT monitor again, push and hold the power button (2) on the side of the ICT monitor for approximately 3 seconds.
If you need to start the ICT monitor again, such as the ICT monitor freezes, turn the starting switch to the OFF position and then turn it to the ON position.

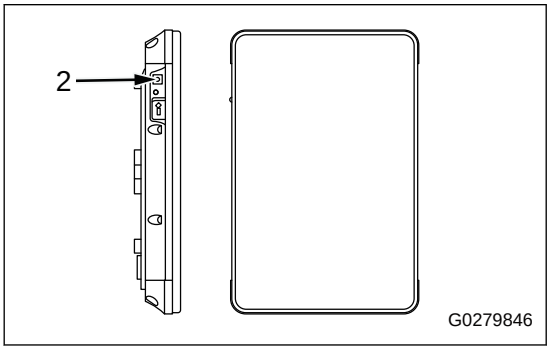

Switch

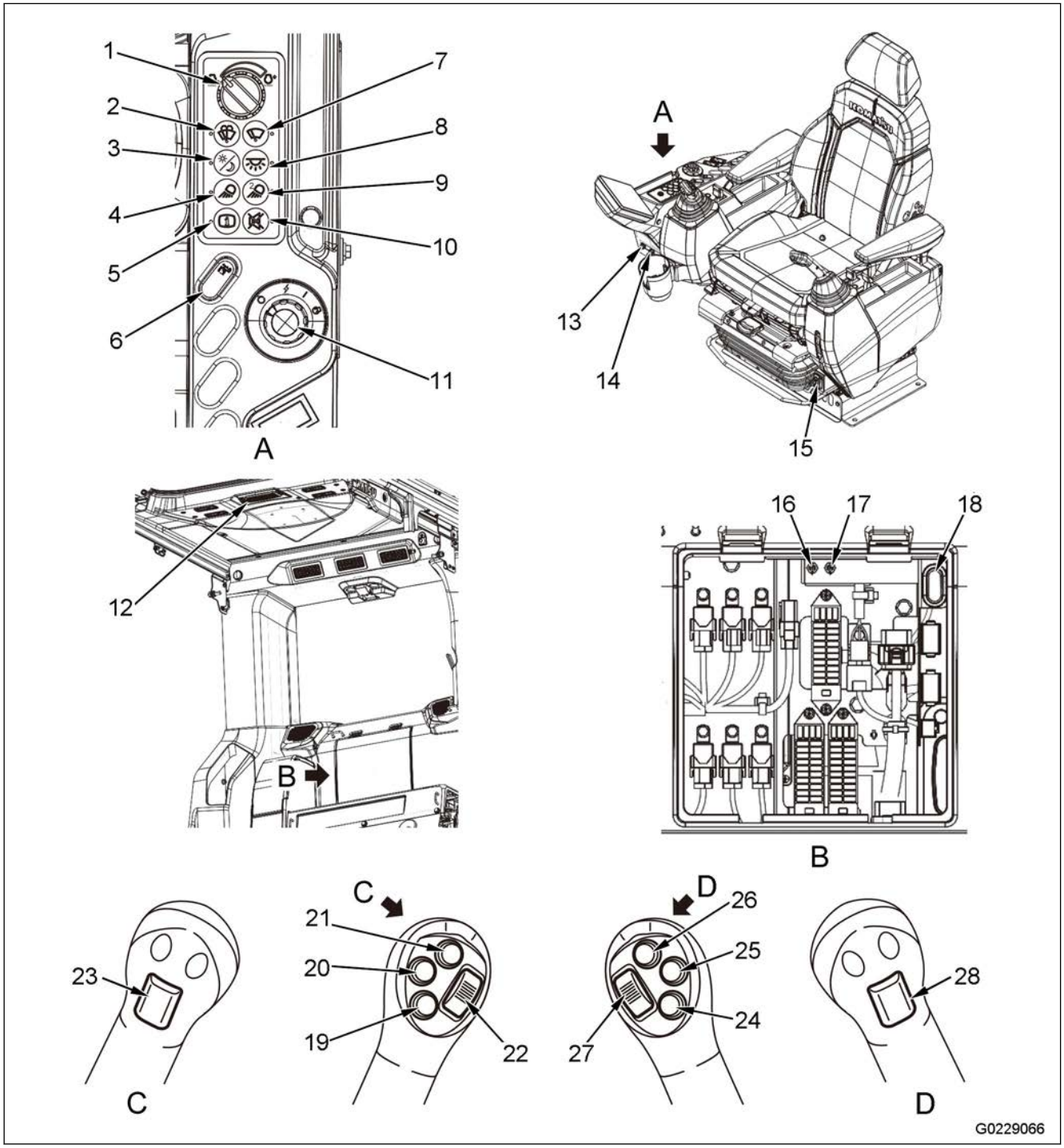

(1) Fuel control dial
(2) Window washer switch
(3) Monitor brightness selector switch
(4) Lamp switch
(5) Information switch
(6) Swing lock switch
(7) Wiper switch
(8) Room lamp remote switch
(9) Additional lamp switch (if equipped)
(10) Mute switch
(11) Starting switch
(12) Room lamp switch
(13) Boom secondary drive switch
(14) Swing secondary drive switch
(15) Engine shutdown secondary switch
(16) Lock lever automatic lock cancel switch
(17) Swing parking brake cancel switch
(18) Limp mode switch

(19) Left work equipment control lever switch 1 (temporary control cancel)
(20) Left work equipment control lever switch 2
(21) Left work equipment control lever switch 3
(22) Left work equipment control lever wheel
(23) Left work equipment control lever switch 4
(24) Right work equipment control lever switch 1 (horn)
(25) Right work equipment control lever switch 2
(26) Right work equipment control lever switch 3
(27) Right work equipment control lever wheel
(28) Right work equipment control lever switch 4

Starting Switch

The starting switch is used to start and stop the engine.

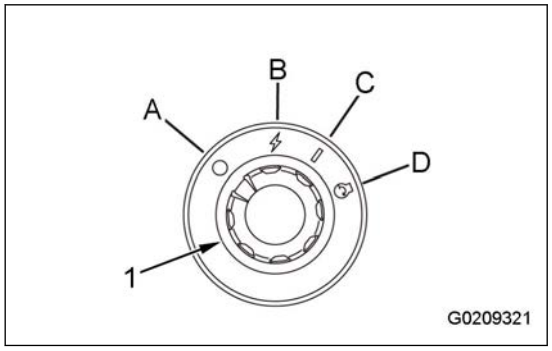

(A): OFF position

The electrical current to the electrical system other than the room lamp will cut off. The engine stops.

(B): ACC position

Electricity flows to the power supply circuit. The monitors and controllers start. The engine stops.

(C): ON position

Electricity flows to the engine. While the engine is in operation, set it in this position.

(D): START position

This is the engine start position. Keep the switch in this position while you crank the engine. When the engine starts, immediately release the switch.

The switch goes back to the ON position (C).

REMARK

- The LED (1) on the starting switch shows that the engine is ready to start.

  Amber: Even if the starting switch is turned to the START position (D), the engine cannot be started.

  Green: When the starting switch is turned to the START position (D), the engine starts.
- When the delayed engine shutdown system is activated, the engine possibly does not stop even if the starting switch is turned to the OFF position (A) or ACC position (B).
  For the delayed engine shutdown system, see “Delayed Engine Shutdown System (3-252)”.

Fuel Control Dial

The fuel control dial is used to control the engine speed and output.

(a) Low idle (MIN)

The position where the dial is turned fully to the left

(b) High idle (MAX)

The position where the dial is turned fully to the right

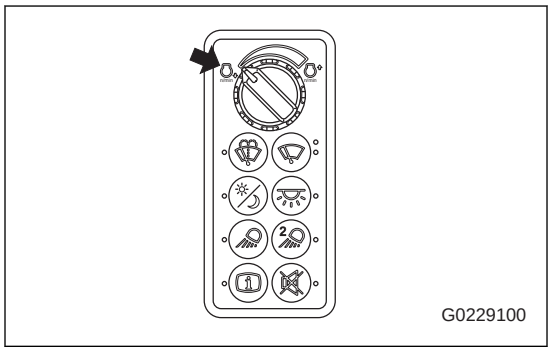

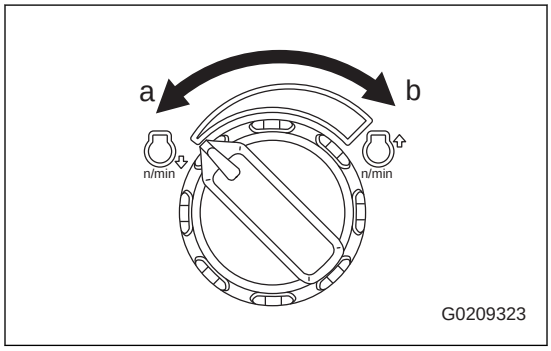

Window Washer Switch

When you push and hold the window washer switch, window washer fluid is sprayed to the front window glass. When you let go of the switch, it stops.

- If you push and hold the switch when the windshield wiper is stopped, window washer fluid is sprayed, and the windshield wiper operates continuously at the same time. When you release the switch, the windshield wiper operates 2 times and stops.
- If you push and hold the switch when the windshield wiper operates intermittently, wind washer fluid is sprayed, and the windshield wiper operates continuously at the same time. When you release the switch, the windshield wiper operates 2 times and goes back to intermittent operation.

(a) Light-on: Window washer fluid sprayed (switch pushed and held).

(a) Light-out: Window washer fluid stops (switch released).

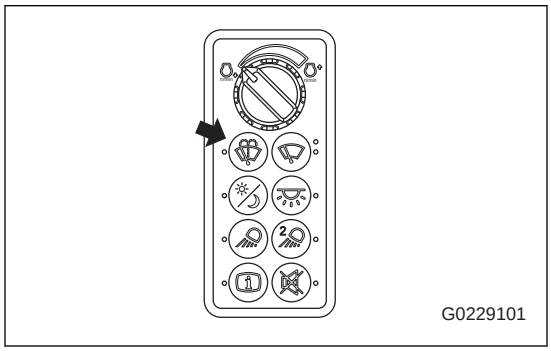

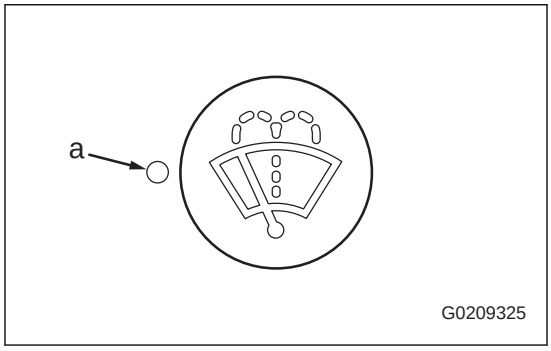

Wiper Switch

You can operate the windshield wiper at the front window glass with the wiper switch.

Each time you push the switch, the display changes as INT→ON→STOP (off).

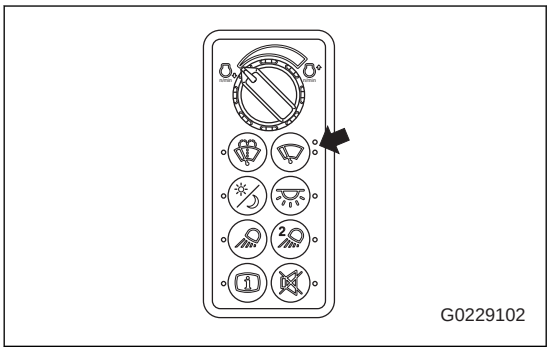

(a) lit: Wiper operates intermittently

(a) and (b) lit: Wiper operates continuously

(a),(b) OFF: Wiper stops

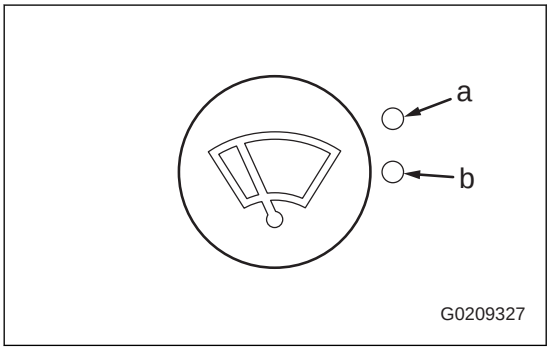

Lamp Switch

The lamp switch turns on the working lamps and changes the monitor illumination to the nighttime mode.

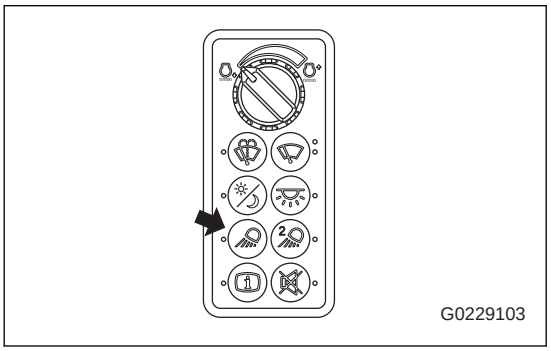

Each time you push the switch, the working lamps turn on and off, and the monitor illumination changes between nighttime and daytime modes.

(a) Lights ON: Working lamps come on and monitor illumination changes to nighttime mode

(a) Lights OFF: Working lamps come on and monitor illumination changes to daytime mode

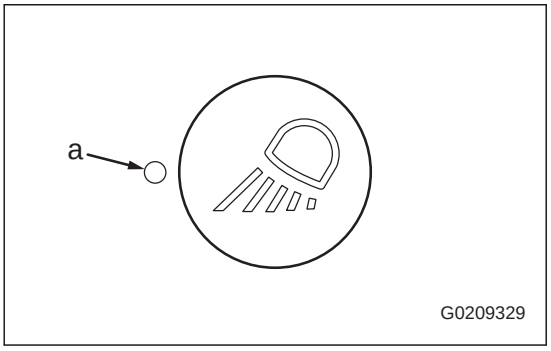

Additional Lamp Switch

(If equipped)

The additional lamp switch turns on the additional working lamp and sets the monitor illumination to the night mode.

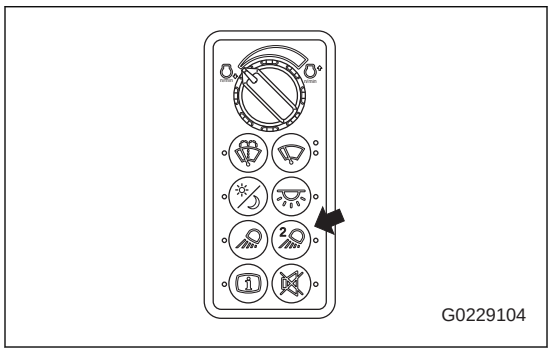

Each time you push the switch, you can turn on the additional working lamps, change to the night mode of the monitor illumination, turn off the additional working lamps, and change to the day mode of the monitor illumination.

(a) On: Turns on the additional working lamps and changes to the night mode of the monitor illumination.

(a) Off: Turns off the additional working lamps and changes to the day mode of the monitor illumination.

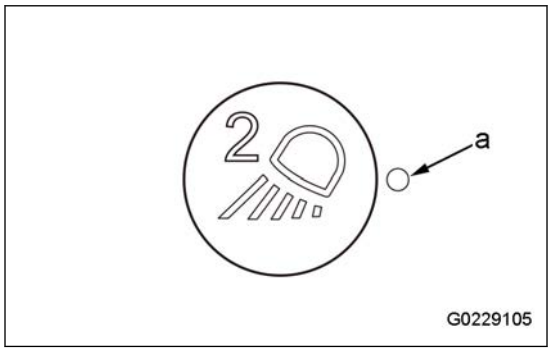

Monitor Brightness Selector Switch

You can use the monitor brightness selector switch to select the brightness (luminance) of the monitor illumination and the switches when the lamp switch is set to the On position.

Each time you push the switch, the function switches between the day mode and the night mode.

When you operate the machine with the headlamp on during the day, set the monitor brightness selector switch to the day mode (A). The monitor screen does not lose the brightness.

(A): Day mode

(a) comes on. The monitor illumination and switches are set to daytime mode.

(B): Night mode

(a) goes off. The monitor illumination and switches are set to nighttime mode. The monitor screen loses the brightness.

REMARK

When the lamp switch is set to the OFF position, the brightness does not change.
For the fine adjustment method of brightness of the machine monitor, see “Brightness Adjustment (3-95)”.

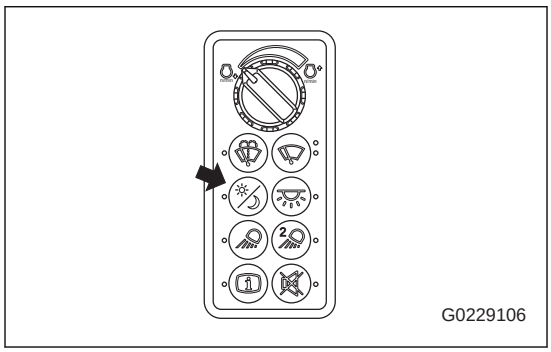

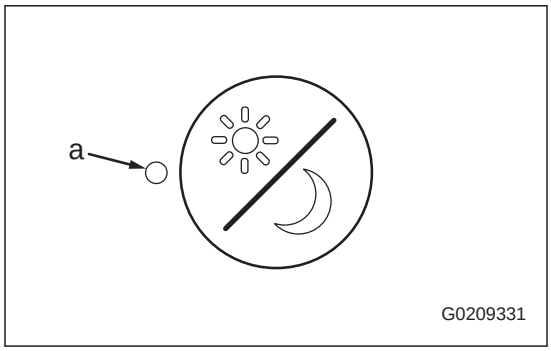

Room Lamp Remote Switch

When the room lamp switch is set at the middle position, the room lamp turns on and off each time you push this switch.

(a) Light-on: The room lamp comes on.

(a) Light-out: The room lamp goes off.

For the room lamp switch, see “Room Lamp Switch (3-138)”.

REMARK

- When the room lamp switch is in the OFF position, the room lamp does not come on even if you push the room lamp remote switch.
- When the room lamp switch is in the ON position, the room lamp does not go off even if you push the room lamp remote switch.

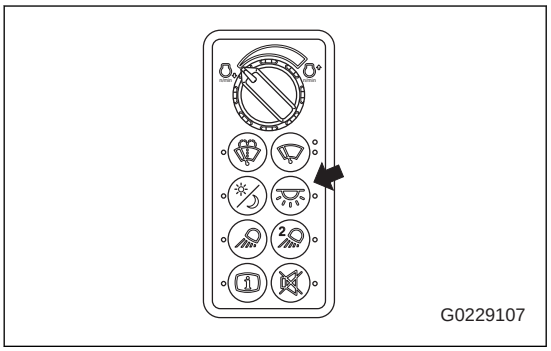

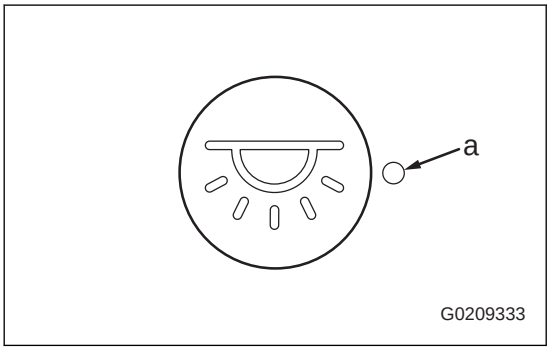

Information Switch

Push the switch to show/hide information screen on the machine monitor.

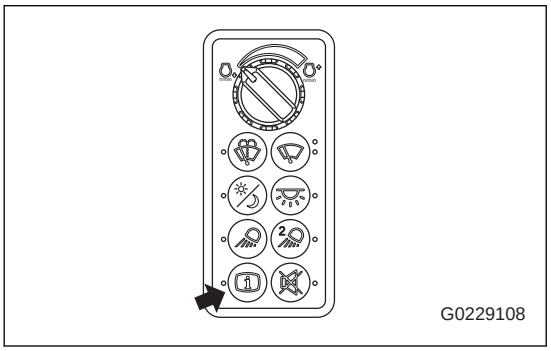

(a) Light-on: Show information screen on machine monitor

(a) Light-out: Hide information screen on machine monitor

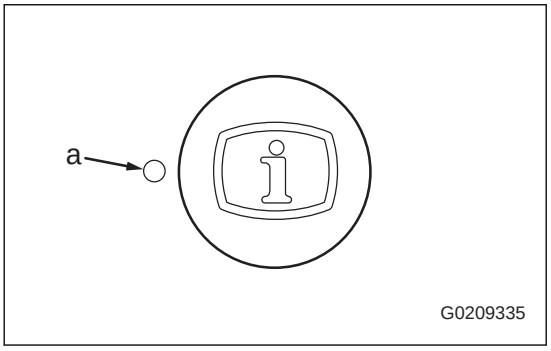

The items shown on “Information screen” are as follows.

(b) Operator ID

(c) Selected attachment information

To change the attachment, see “How to Change Attachment (3-302)”.

(d) Setting state of lever response adjustment

For the response adjustment, see “Response Adjustment (3-72)”.

(e) Setting state of “Adjustable priority”

For “Adjustable priority”, see “Adjustable Priority (3-71)”.

(f) Setting state of work equipment single speed adjustments

For the adjustment of work equipment single speeds, see “Speed Adjustment (3-71)”.

(g) Setting state of lever switch allocations

For the lever switch allocation, see “Lever Switch Assignment (3-58)”.

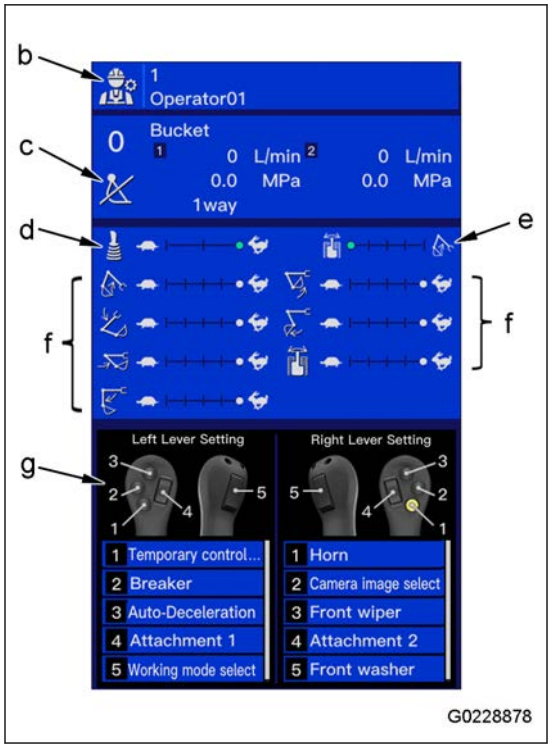

REMARK

“Information Screen” is shown when the lock lever is in the LOCK position (L) on the standard screen.

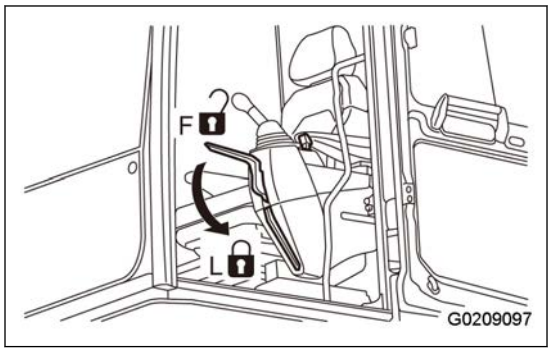

Mute Switch

Each time you push the switch, the mute function of the audio, guidance, and buzzer sounds turns on or off.

(a) Light-on: The mute function of the audio, guidance, and buzzer sounds turns on.

(a) Light-out: The mute function of the audio, guidance, and buzzer sounds turns off.

If the buzzer that can be muted is in operation, the audio is not muted and the buzzer sound stops.

If you want to turn off the mute function, push the mute switch again.

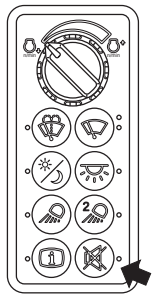

G0229109

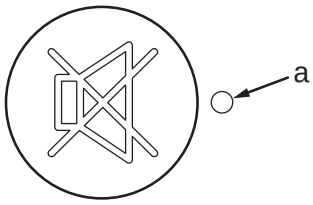

G0209339

Swing Lock Switch

⚠ WARNING

- **When you do not do swing operations, such as when the machine travels, set the swing lock switch to the ON position.**
- **If you do a swing operation in the down direction on a slope, the upper structure can make a swing by the load, such as the weight of work equipment, even when the swing lock switch is ON. Be careful.**

The swing lock switch is used to secure the upper structure against rotation.

(a) ON position

The swing lock is always engaged, and the upper structure does not swing even if you make a swing operation. At this time, the swing lock indicator comes on.

(b) OFF position

When you operate the swing control lever, the swing lock is released and the upper structure rotates.

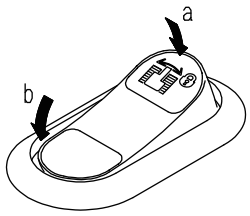

G0174022

Switch of Work Equipment Control Lever

There are 5 switches each on the right and left work equipment control levers.

Each switch is as follows.

(1) Left work equipment control lever switch 1 (temporary control cancel)

(2) Left work equipment control lever switch 2

(3) Left work equipment control lever switch 3

(4) Left work equipment control lever wheel

(5) Left work equipment control lever switch 4

(6) Right work equipment control lever switch 1 (horn)

(7) Right work equipment control lever switch 2

(8) Right work equipment control lever switch 3

(9) Right work equipment control lever wheel

(10) Right work equipment control lever switch 4

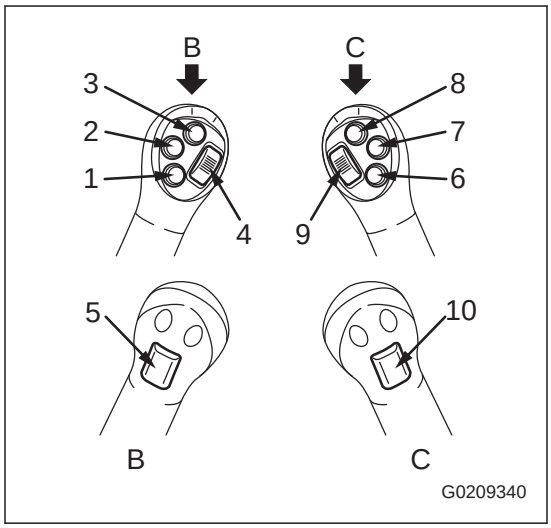

You can change the allocation of the lever switches by the operation on the machine monitor.

For the lever switch allocation, see “Joystick Pattern Selection (3-63)”.

The settings are stored for each operator ID. If the lever switch allocations are changed, the changed settings are taken over the next time the same operator logs on.

Horn Switch

A horn switch (yellow) is at the top of the right work equipment control lever.

You can operate the horn with the switch.

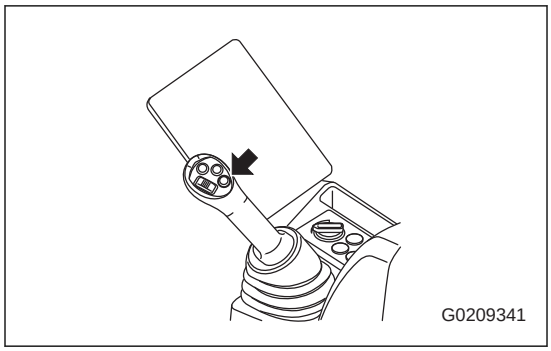

Temporary Control Cancel Switch

The temporary control cancel switch is installed at the top of the left work equipment control lever.

While the temporary cancel switch is pushed, the control of the functions below, etc., is temporarily stopped.

- Object avoidance
- Machine control
- 2D boundary control
- Cab interference prevention
- Swing to angle

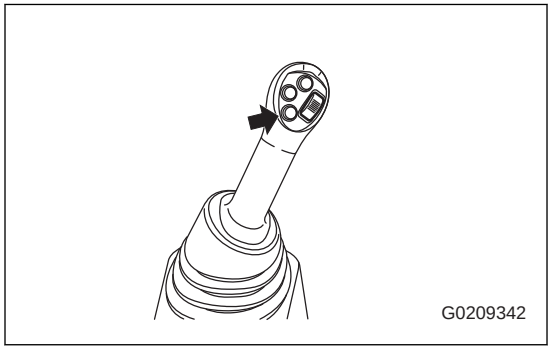

Room Lamp Switch

NOTICE

If the room lamp is kept on, it can cause the battery to discharge. Be sure to set the room lamp switch to the OFF position after the room lamp is used.

You can turn on or off the room lamp with the room lamp switch.

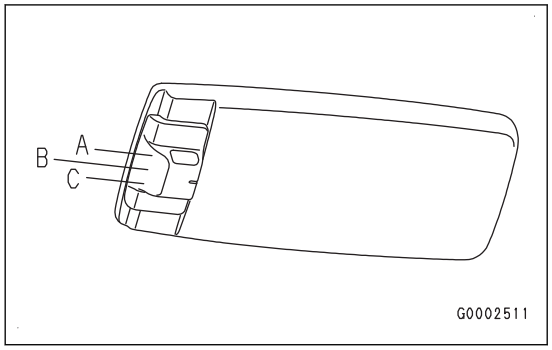

(A) OFF position

The room lamp goes off.

(B) Middle position

- You can turn on and off the room lamp with the room lamp remote switch.
- The room lamp turns on and off in conjunction with the remote courtesy lights function.

(C) ON position

The room lamp comes on.

REMARK

- The room lamp comes on even when the starting switch is in the OFF position. When you move from the operator seat, set the switch to the OFF position (A) or the middle position (B).
- When you do the operation with the cab door fully open, set the switch to the OFF position (A).

Swing Parking Brake Cancel Switch

NOTICE

The swing parking brake cancel switch makes the swing operations possible temporarily when there is a problem in the swing parking brake system. Use this switch only when a problem is found. Repair the defective part immediately.

The swing parking brake cancel switch makes swing operations possible temporarily when there is a problem in the swing parking brake system (when the upper structure does not swing but the display does not show “L03”).

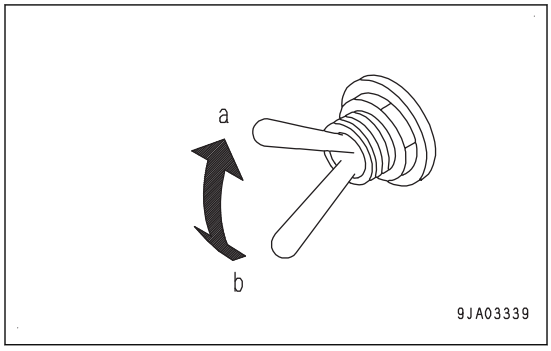

(a) CANCEL

In abnormal situation (switch in upper position)

(b) NORMAL

Usually (switch in lower position)

- When the upper structure does not swing but the display does not show “L03”, move this switch to the CANCEL position (a), and there is a possibility that you can do the operation.
- When you move the switch to the CANCEL position (a), the swing lock indicator flashes.

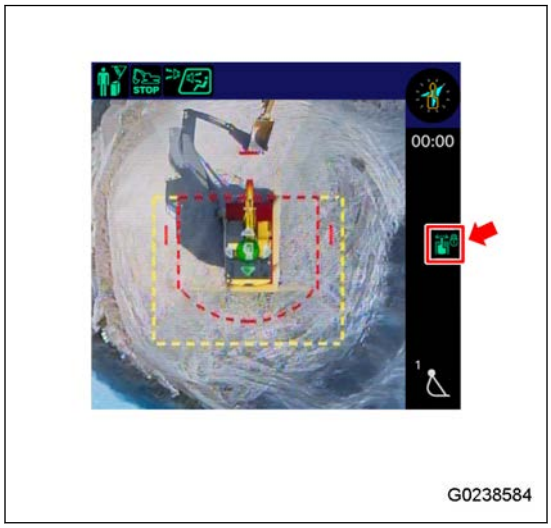

Lock Lever Automatic Lock Cancel Switch

NOTICE

The lock lever automatic lock cancel switch is used to disable the lock lever automatic lock function and enable the operations of the work equipment and machine temporarily, when the lock lever automatic lock function is abnormal. Use this switch only when you need to temporarily move the machine or work equipment in an abnormal and emergency condition. Repair the defective part immediately.

If a problem is found in the lock lever automatic lock function, even when the lock lever is canceled correctly under the condition that the work equipment control lever or travel lever is in the NEUTRAL position, this function can operate by mistake and the machine or work equipment cannot move. If you set the lock lever automatic lock cancel switch to the CANCEL position (a), the machine or the work equipment can be operated temporarily.

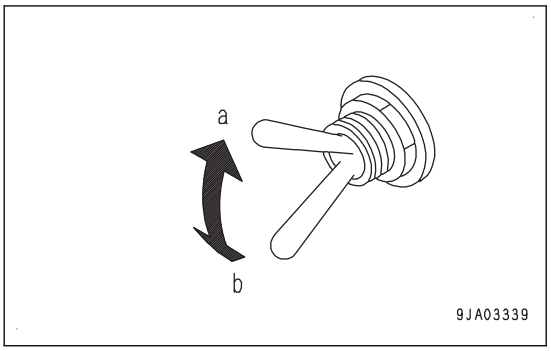

(a) CANCEL

In abnormal situation (switch in upper position)

(b) NORMAL

Usually (switch in lower position)

- When the lock lever automatic lock cancel switch is set to the CANCEL position (a), the lock lever automatic lock cancel indicator comes on. At the same time, the mode is shown in the center of the machine monitor display. After 2 seconds, the screen goes back to the standard screen.
- After you cancel the switch to move the machine or work equipment temporarily, stop the engine, move back the switch to the NORMAL position (b), and then consult your Komatsu distributor for repair.

Limp Mode Switch

NOTICE

The limp mode switch makes it possible to temporarily operate the work equipment and the machine when failure prevents the operation. Use this switch only when you need to temporarily move the machine or work equipment in an abnormal and emergency condition. Repair the defective part immediately.

If the work equipment control lever becomes inoperable because of abnormality in the machine, turn the limp mode switch to the ON position. You can possibly make travel, swing, and boom operations temporarily.

If you operate the machine with the limp mode switch, the work equipment, swing, and travel speeds will be different from the usual state. Make sure that there is no person or obstacles in the working range before you operate the machine.

REMARK

The speed can be higher or lower by the nature of the failure.

(a) ON: When there is abnormality (upper side of switch)

(b) Normal: When it is usual (lower side of switch)

When the limp mode switch is turned to the ON position (a), the swing secondary drive switch (1) and the boom secondary drive switch (2) are active. Also, you can drive the machine normally with the travel lever.

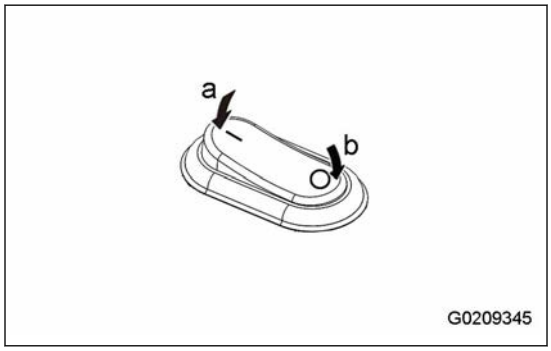

Swing secondary drive switch (1)

(c) Right: Swing to the right.

(d) Left: Swing to the left.

(e) Center: Swing operation stops.

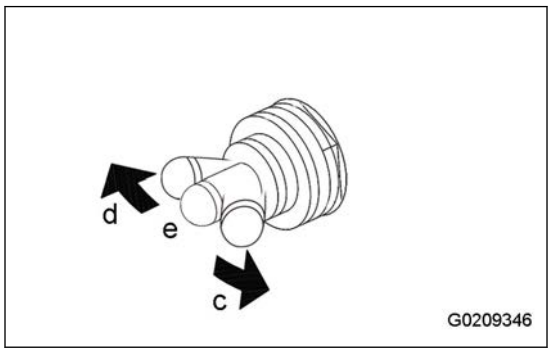

Boom secondary drive switch (2)

(f) Raise: Raise the boom.

(g) Lower: Lower the boom.

(h) Center: Stop the boom.

After you use the limp mode switch to move the machine or work equipment temporarily, stop the engine. Move back the switch to the usual position (b). Consult your Komatsu distributor for repair.

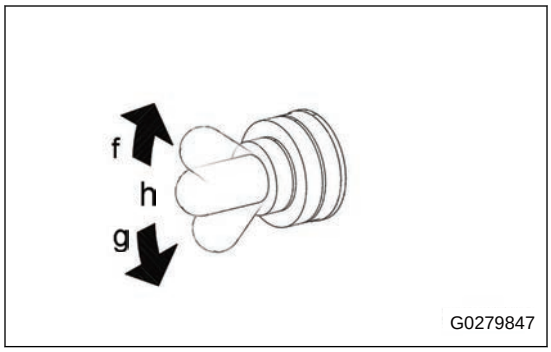

Engine Shutdown Secondary Switch

NOTICE

- **Do not use the engine shutdown secondary switch when the machine is normal. If there is an abnormal part, immediately consult for repair.**
- **When the machine is normal, if you accidentally set the engine shutdown secondary switch to the ENGINE STOP position, "Engine Shutdown Secondary SW in Operation" is shown on the machine monitor. When "Engine Shutdown Secondary SW in Operation" is shown on the machine monitor, make sure that the switch is in the usual position. If the switch is in the ENGINE STOP position, move it back to the usual position.**

G0228726

The engine shutdown secondary switch can stop the engine if it does not stop even after you turn the starting switch to the OFF position.

1. Lift the cover (C) to open it.

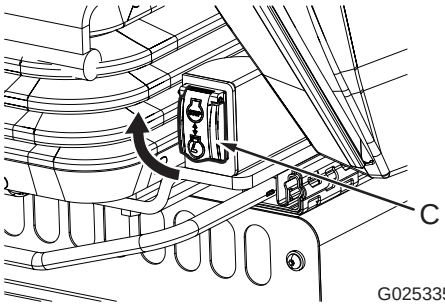

G0253351

2. Set the engine shutdown secondary switch to the upper position (a) to stop the engine.

   (a) ENGINE STOP

   In abnormal situation (switch in upper position)

   (b) NORMAL

   Usually (switch in lower position)

   Close the cover (C). The engine shutdown secondary switch automatically goes back to the NORMAL position (b).

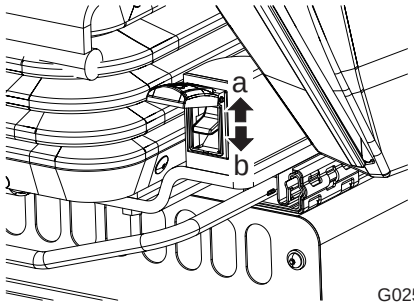

G0253352

REMARK

When the engine stops with the engine shutdown secondary switch, the power supply of some parts of the machine system is not turned off. To turn the power supply off fully, use the battery disconnect switch. For the battery disconnect switch, see "Battery Disconnect Switch (3-169)".

Control Levers and Pedals

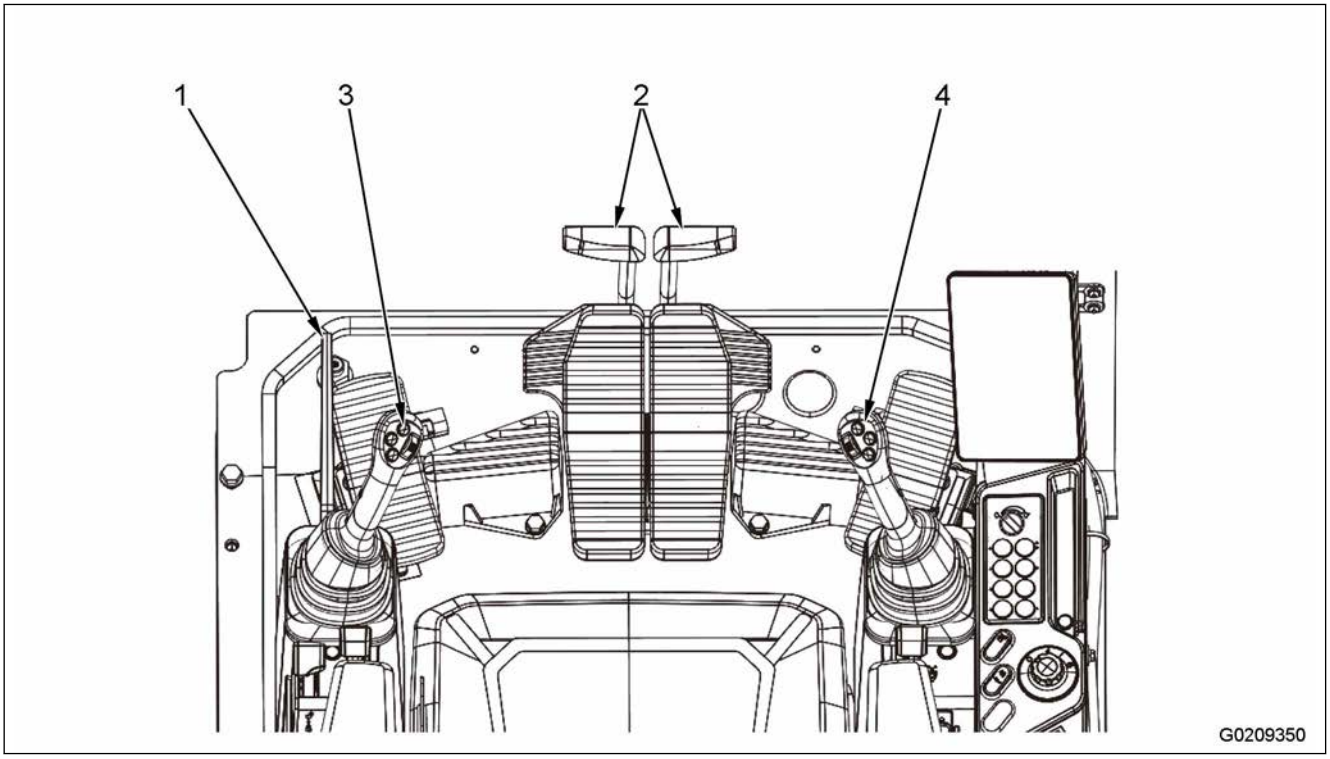

(1) Lock lever

(2) Travel lever (with pedal, auto-deceleration mechanism)

(3) Left work equipment control lever (with auto-deceleration mechanism)

(4) Right work equipment control lever (with auto-deceleration mechanism)

Lock Lever

WARNING

- **When you open and close the window, adjust the operator's seat position, or stand up from the operator seat, set the lock lever securely to the LOCK position. If you touch the control levers or control pedals by mistake while the lock lever is not at the LOCK position, it can cause serious personal injury or death.**
- **Make sure that the lock lever is securely in the LOCK position.**
- **When you pull up or push down the lock lever, be careful not to touch the work equipment control levers. Make sure that your clothes do not get caught by the work equipment control lever.**
- **Before you set the lock lever to the FREE position, make sure that all control levers and pedals are set to the NEUTRAL position. If one of them is not at the NEUTRAL position, the work equipment or machine can move suddenly and cause personal injury.**

The lock lever is a device to lock the work equipment, swing, travel, and attachment (if equipped) operations.

Be sure to hold the operating part (g) to operate the lock lever. Do not hold the red bar at the console end to operate it.

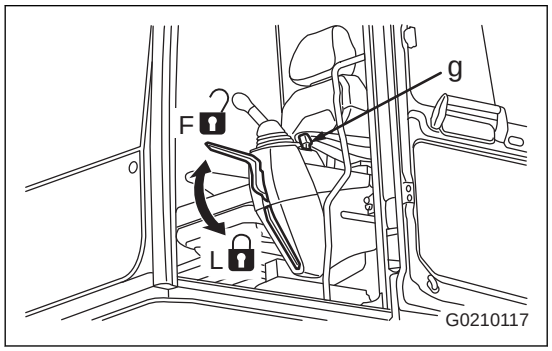

(L) LOCK position

The red bar at the console end lowers. The machine does not move even if you operate the control levers or attachment control pedals (if equipped).

(F) FREE position

The red bar at the console end rises and becomes a closed gate in the path. The machine moves in response to the operation of levers or attachment control pedals (if equipped).

REMARK

Machine does not move when the lock lever is in the LOCK position (L) while the control levers or control pedals move because the lock lever is of hydraulic lock type.

Automatic Lock Function of Lock Lever

WARNING

- **The lock lever automatic lock function helps the operator to make a judgment and to reduce damage caused by an accident. It is not a device to stop the work equipment or machine in all situations.**
- **Even if the automatic lock function of the lock lever is activated, the work equipment or machine possibly does not stop immediately, or it possibly stops after it moved some distance. Also, the Automatic Lock Function of Lock Lever possibly does not work in the cases that follow. Do not rely on it too much.**
  - **When the hydraulic oil temperature is low (when the hydraulic oil temperature caution lamp shows low temperature)**
  - **When the viscosity of the hydraulic oil used is higher than that of the genuine hydraulic oils which Komatsu recommends**
- **Before you set the lock lever to the FREE position, make sure that all control levers and pedals are set to the NEUTRAL position. If one of them is not at the NEUTRAL position, the work equipment or machine can move suddenly and cause personal injury.**

The automatic lock function of lock lever prevents unwanted work equipment or machine operations when the lock lever is released in the state where the work equipment control lever or travel lever is operated. The lock lever is set in the same state as when it is locked automatically.

When this function is activated, the operation of the work equipment, swing, travel, and attachment operation are locked automatically. The message as in the figure is shown.

While this function is in operation, the machine does not move even when the lock lever is in the FREE position (F), and the control levers or attachment control switches are operated.

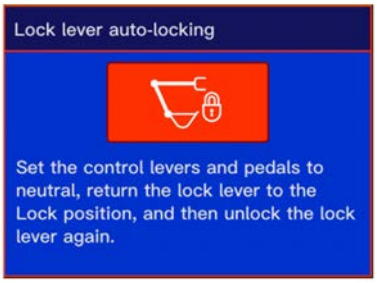

G0228880

To release the lock, set the operating part (g) of the lock lever to the LOCK position (L). Make sure that each control lever and the attachment control switches are in the NEUTRAL position. Release the lock lever again.

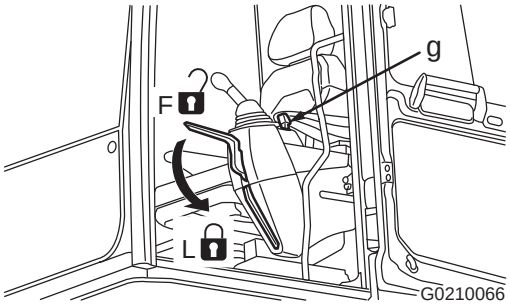

G0210066

REMARK

For the genuine hydraulic oil which Komatsu recommends, see “How to Use Fuel, Coolant and Lubricants by Ambient Temperature (7-10)”.

Travel Lever

WARNING

- **If you operate the machine with your foot on the pedals and push them by mistake, the machine can suddenly start to travel. It can cause a serious personal injury or death. Be very careful of travel and steering with the pedals. Do not put your foot on the pedals unless necessary.**
- **When the track frame is in the reverse direction, the machine moves in the direction opposite to the direction where the travel lever is operated (forward/reverse travel, right/left steer).**
  When you operate the travel lever, make sure if the track frame points forward or rearward.
  The front of the track frame is on the front side when the sprockets are at the rear.

Use the travel lever to shift the travel direction to forward/reverse. Description in the round bracket is for the pedal operation.

(a) FORWARD

The travel lever is pushed forward.

(The front part of the pedal is pushed.)

(b) REVERSE

The travel lever is pulled back.

(The rear part of the pedal is pushed.)

(N) NEUTRAL

The machine stops.

REMARK

When the travel lever is moved from NEUTRAL to FORWARD or REVERSE, the alarm makes a sound to give a warning that the machine starts to move.

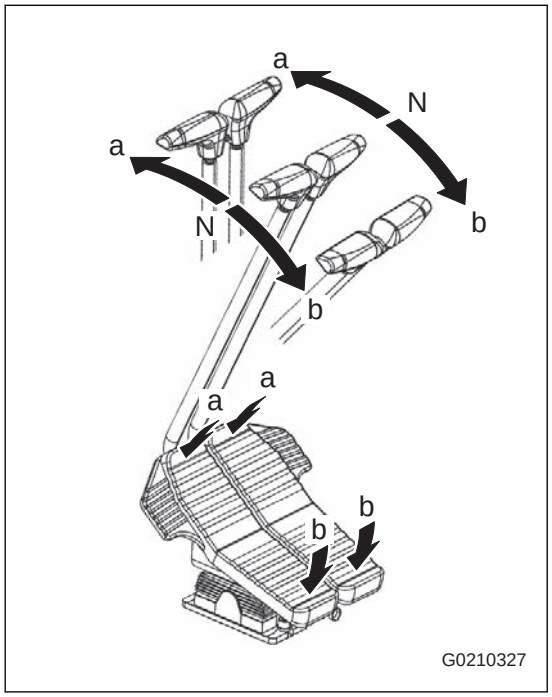

Work Equipment Control Lever

WARNING

- **By default, the operation pattern is set to the ISO/JIS pattern.**
- **For operation patterns other than the ISO/JIS pattern, see “Control Patterns Other Than Standard Control Pattern (3-525)”. Be sure to read and understand them before you start the operation.**

The left work equipment control lever is used to operate the arm and upper structure.

Arm operation

(a): Arm OUT

(b): Arm IN

Swing operation

(c): Swing RIGHT

(d): Swing LEFT

(N) NEUTRAL

The upper structure and arm are held in position and do not move.

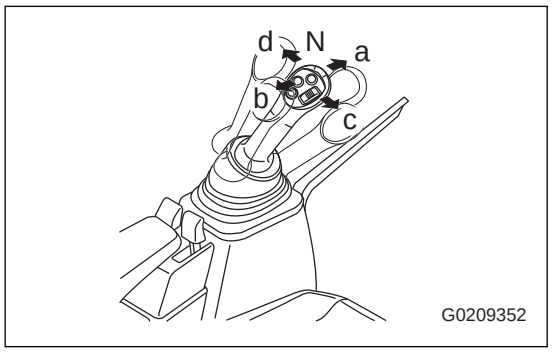

Use the right work equipment control lever to operate the boom and bucket.

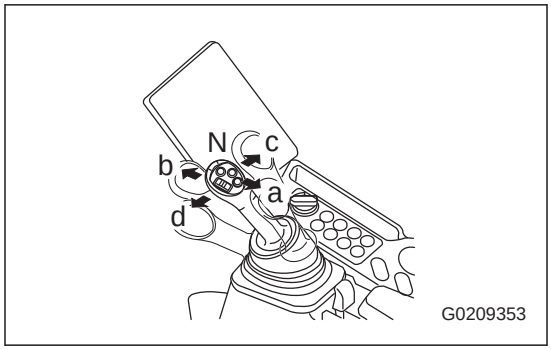

Boom operation

(a): Boom RAISE

(b): Boom LOWER

Bucket operation

(c): Bucket DUMP

(d): Bucket CURL

(N) NEUTRAL

The boom and bucket are held in position and do not move.

You can change the control pattern with the operation on the machine monitor.

For the lever pattern setting, see “Joystick Pattern Selection (3-63)”.

The setup is stored for each operator ID. Accordingly, if the operation pattern is changed, the changed setup is taken over at the next Logon.

REMARK

The currently selected operation pattern is shown on “Lever pattern display” of the machine monitor.

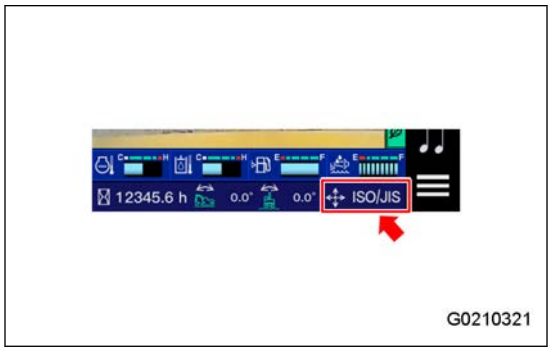

If a problem is found in the lever pattern setting, the icon flashes in red and the operation pattern is not shown. In that case, turn the starting switch back to the OFF position (A). Wait until the machine monitor goes off, and then operate the starting switch again.

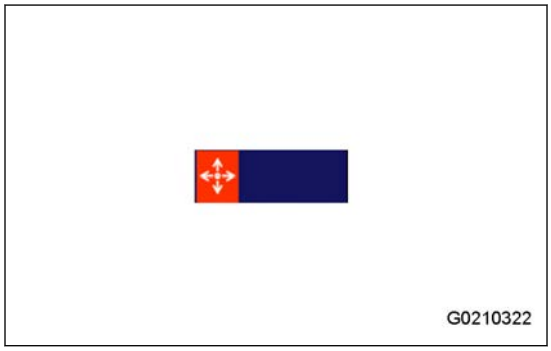

Other Equipment

How to Open and Close Ceiling Window

⚠ WARNING

When you stand up from the operator's seat, set the lock lever securely to the LOCK position.
If you touch the control lever or control pedal by mistake while the lock lever is at the FREE position, it can cause personal injury or death.

When You Open

1. Hold the operating part (g) of the lock lever (1), and set it to the LOCK position (L) securely.

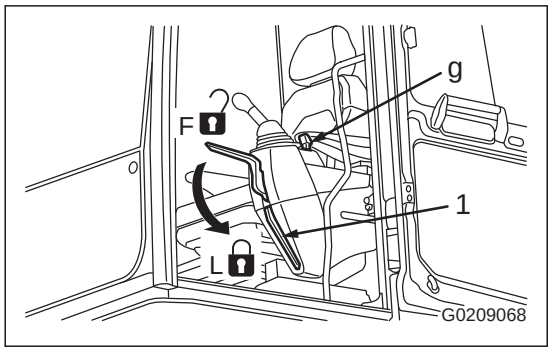

2. Push up the lock (2) in the front center of the ceiling window and make sure that the lock is released. And then hold the grip (3) and push up the ceiling window.

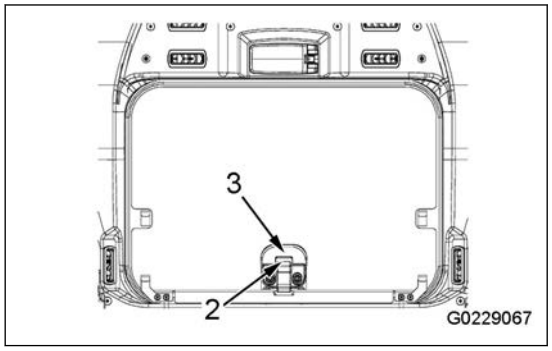

Open the ceiling window while the ceiling window roller shades are stowed (A).

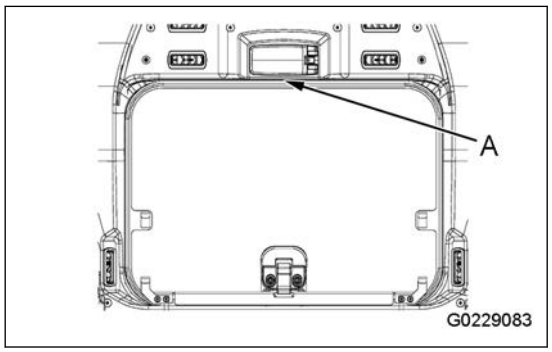

NOTICE

If you open the ceiling window while the ceiling window roller shades are fixed at the middle position (B), the ceiling window roller shades can have damage.

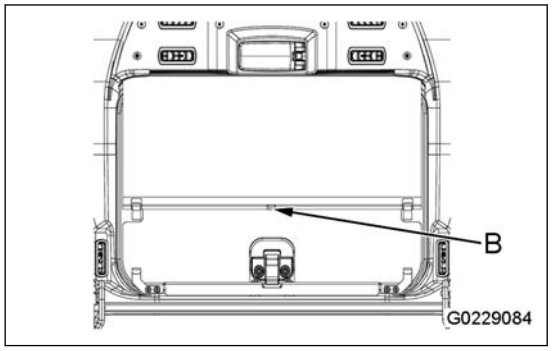

When You Close

Hold the grip (3), lower the ceiling window, and apply the lock (2). If the lock cannot be applied, “open” the ceiling window, and then pull it in again.

Open and Close CAB Front Window

⚠ WARNING

- **Be sure to set the lock lever in the LOCK position when you open or close the front window, lower window, or door.**
  If you accidentally touch the control lever or control pedal while the lock lever is in the FREE position, it can cause serious personal injury.
- **When you open or close the front window or lower window, stop the machine on a level area. Lower the work equipment to the ground. Stop the engine.**
- **Before you open or close the front window, stow the ICT monitor. After you open or close the front window, restore the ICT monitor to its original position promptly.**
- **Do not start the engine while the ICT monitor is stowed.**
- **When you open the front window, hold the handle securely with two hands to pull up. Do not let go of it until it is locked by the automatic lock catch.**
- **When you close the front window, hold the handles securely with two hands. There is a danger that the window falls off by its own weight.**

You can stow (pull up) the front window (upper side) in the roof of the operator's compartment.

When You Open

1. Lower the work equipment to the ground on a level area, and stop the engine.

   Hold the operating part (g) of the lock lever (1), and set it to the LOCK position (L) securely.

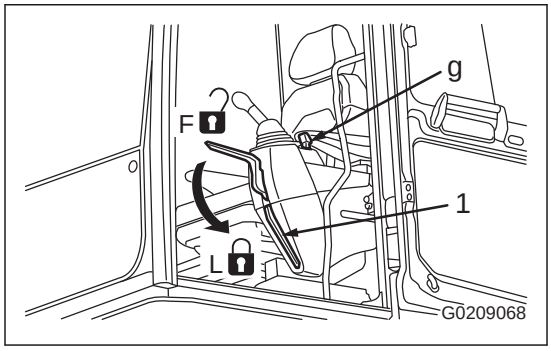

2. Make sure that the wiper blade is stowed in the position shown in the figure.

   If the wiper blade is not set to the stowing position (b) correctly, lift it to move to the correct stowing position (a). If the wiper blade cannot go back to the correct stowing position, consult your Komatsu distributor for repair.

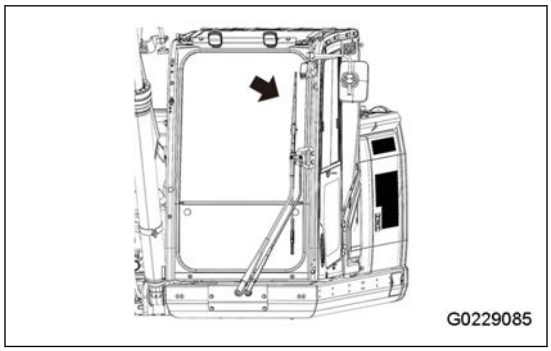

(a) Correct stowing position

The wiper blade is on the cab.
(b) Incorrect stowing position
The wiper blade is on the glass.

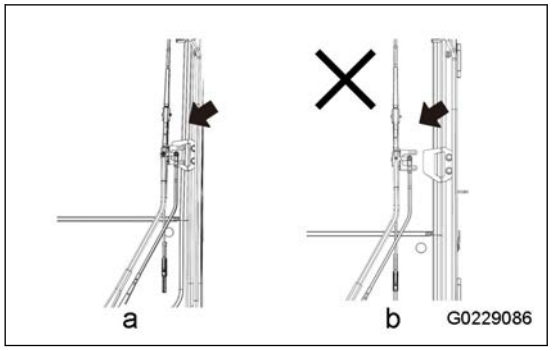

3. Turn the handle (2) of the mount to loosen it.

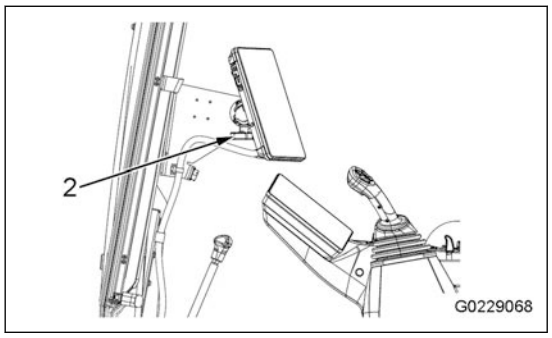

4. Set the mount near to the right glass. Turn the screen of the ICT monitor toward the operator seat.
5. Turn the handle (2) of the mount to tighten it and secure the ICT monitor.

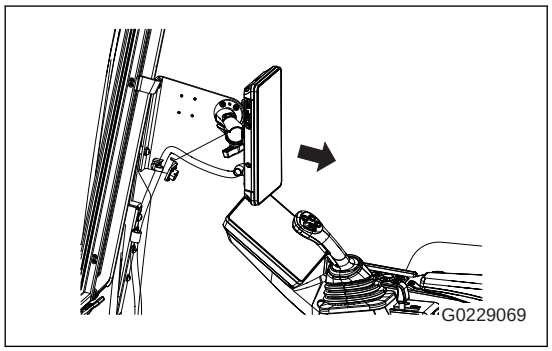

6. While you hold the handles (A) (2 places) on the right and left top sides of the front window, pull the levers (B) (2 places) to release the lock on the top of the front window. Upper part of the front window comes off.

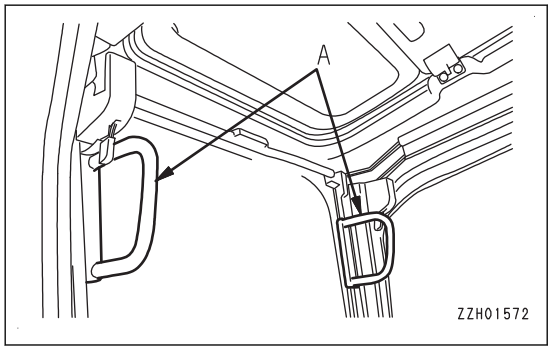

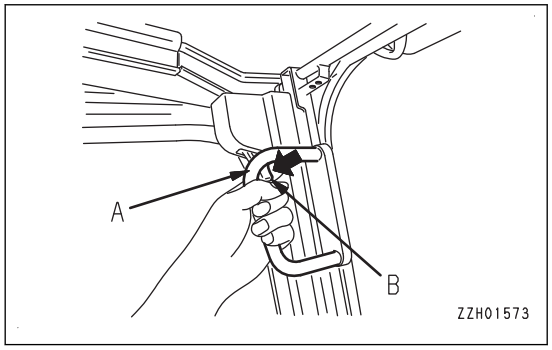

7. From the inside of the operator cab, pull up the handle (C) at the bottom with your left hand and the handle (A) at the top right with your right hand. Push it against the lock catches (E) at the rear of the cab securely to lock it.

   When you pull up the front window, make sure that the ICT monitor and front window do not interfere with each other. Pull up the front window slowly.

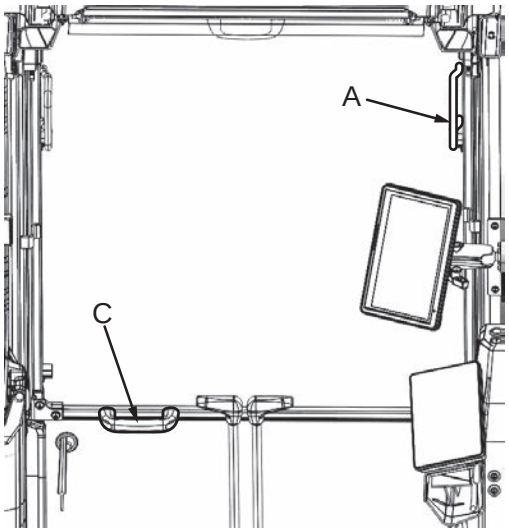

G0209358

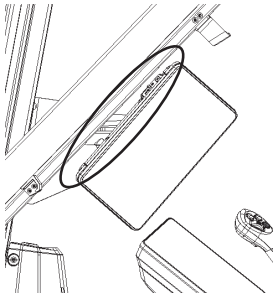
G0209359

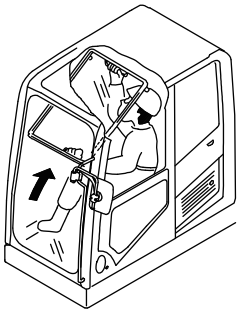
9JH16263

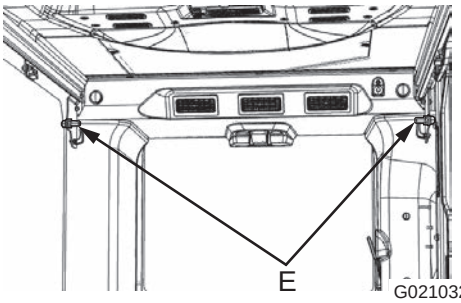

G0210329

8. Make sure that the lever (B) is securely in the LOCK position.
   - The lock is engaged if the arrow on the lock case (F) is the same as the position of the arrow on the lever (B).
     Examine it visually.
   - The lock is not engaged if the arrow on the lock case (F) is different from the position of the arrow on the lever (B).
     Do the operation in the step 8 again to engage the lock.

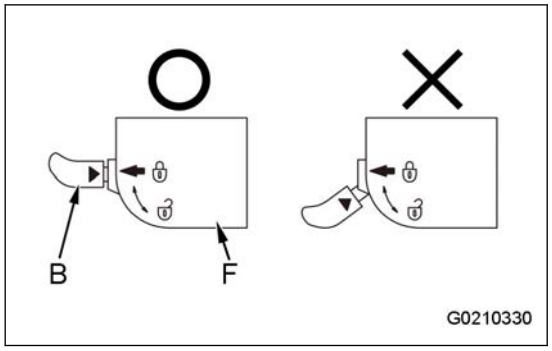

9. Set the ICT monitor to a position that is easy to see.
10. Turn the handle (2) of the mount to tighten it and secure the ICT monitor not to move.
11. Move the work equipment control levers. Make sure that there is sufficient clearance with the ICT monitor.
    Make sure that the clearance (a) is 40 mm {1.6 in} or more.

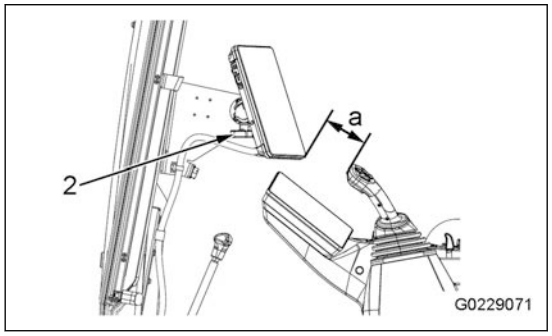

When You Close

⚠ CAUTION

When you close the cab front window, lower it slowly and be careful not to get your hand caught.

NOTICE

Make sure that the wiper blade is stowed at the correct position (a), and close the front window.
If the front window is closed when the wiper blade is stowed at the incorrect position (b), be careful that the wiper blade can break.

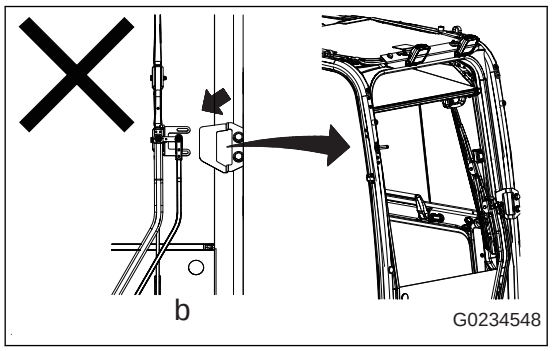

1. Lower the work equipment to the ground on a level area, and stop the engine.

   Hold the operating part (g) of the lock lever (1), and set it to the LOCK position (L) securely.

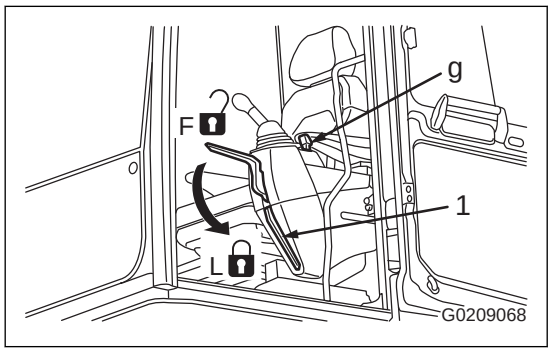

2. Make sure that the wiper blade is stowed in the position shown in the figure.

   If the wiper blade is not set to the stowing position (b) correctly, lift it to move to the correct stowing position (a). If the wiper blade cannot go back to the correct stowing position, consult your Komatsu distributor for repair.

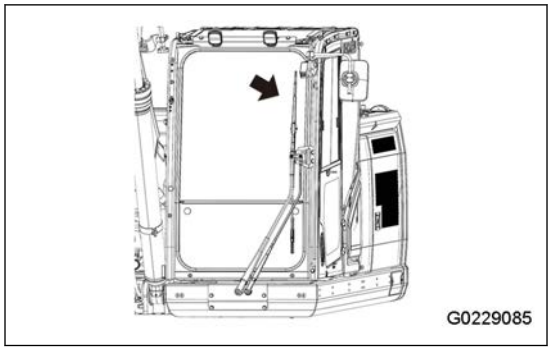

   (a) Correct stowing position

   The wiper blade is on the cab.
   (b) Incorrect stowing position
   The wiper blade is on the glass.

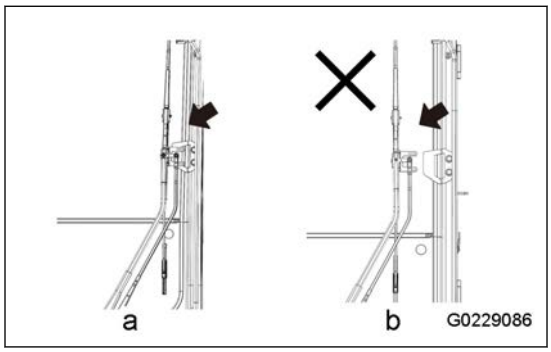

3. Turn the handle (2) of the mount to loosen it.

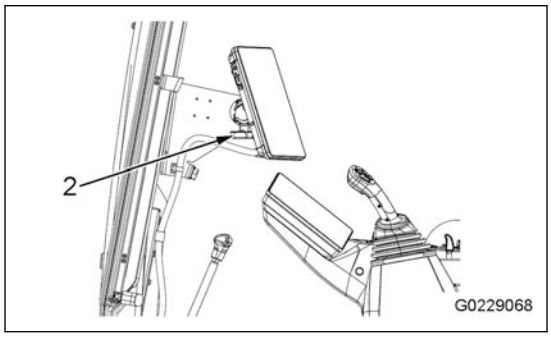

4. Set the mount near to the right glass. Turn the screen of the ICT monitor toward the operator seat.
5. Tighten the handle (2) of the mount to secure the ICT monitor.

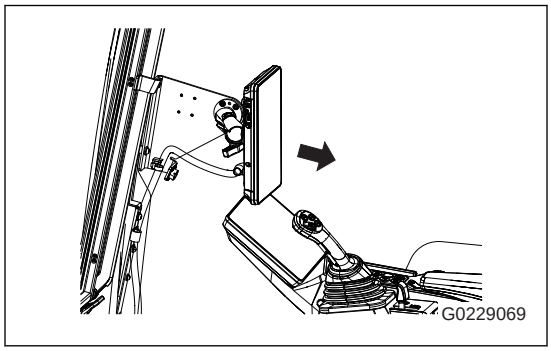

6. Hold the right and left handles (A), and pull down the lever (B) to release the lock.

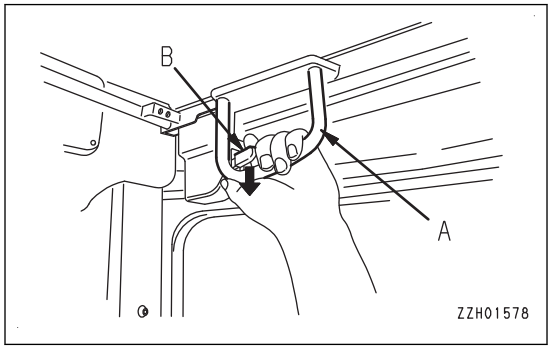

7. Hold the handle (C) at the bottom of the front window with your left hand, and the handle (A) at the top right with your right hand. Push the window to the front and lower it slowly.

   Make sure that the ICT monitor and the front window do not interfere with each other when you lower the front window.

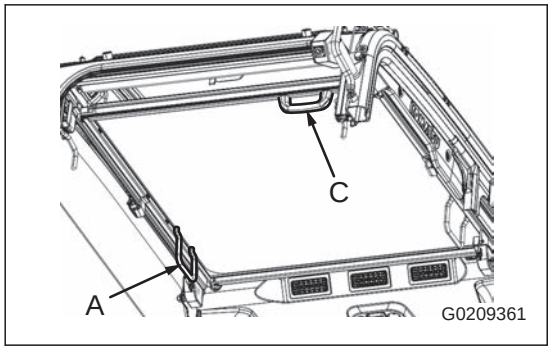

Remove Front Window (Lower Side)

The front window (lower side) can be stowed in the rear side of the operator's cab.

1. Hold the knobs (1) and pull them up while the front window is open, and remove the lower window.

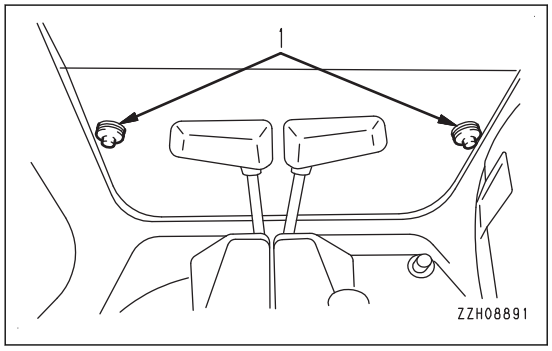

   REMARK

   If sand or dirt accumulates on the lower front of the front window, it will not be easy to remove the window. In addition, the dirt attached to the glass will be carried into the cab when you stow it. Clean the part (A) before removal.

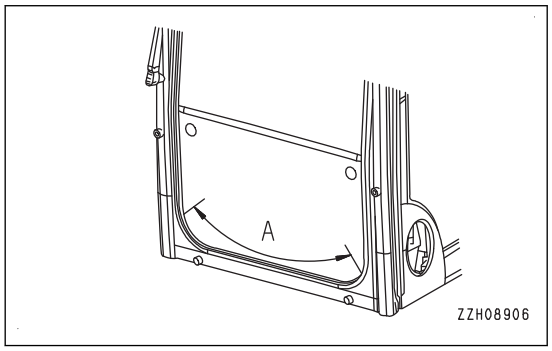

2. Insert the removed lower window into the receiving rubber (2) at the rear of the operator's cab. At this time, the knob must be on the left front side of the machine. Push the lower window with strong force into the lock (3) to fix it.

   NOTICE

   - **Fix the lower window in the correct direction as shown in the figure. It cannot be fixed to the receiving rubber (2) in the incorrect direction.**
   - **Lower the lock with your finger and make sure that it is fully engaged.**
   - **When you recline the operator seat, make sure that it does not interfere with the stowed lower window. The seat possibly interferes with the stowed lower window in some reclined angles.**

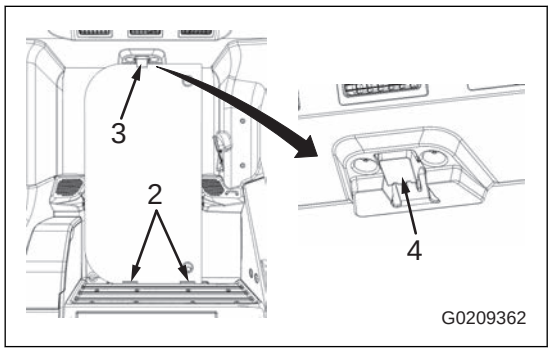

3. When you remove the stowed lower window, push up the surface (4) of the lock (3) while you hold the glass to release the lock. Take out the glass.

NOTICE

When you install the lower window, install the wiper at the lower side not to be caught.

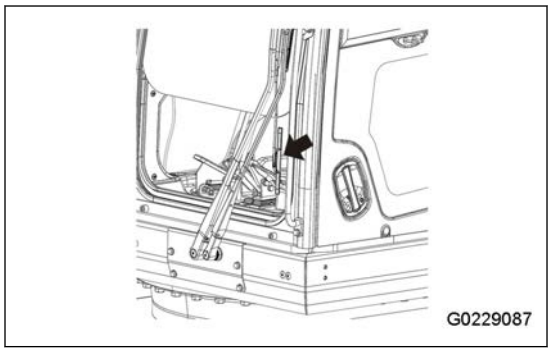

How to Use Front Roller Shades

WARNING

- **Do not use the roller shades during the travel operation. It can interfere the visibility.**
- **Before you operate the roller shades, set the lock lever to the LOCK position securely.**
- **If you accidentally touch the control lever or control pedal while the lock lever is in the FREE position, it can cause serious personal injury.**

How to pull out

1. Operate the operating part (g) of the lock lever (1) to set it to the LOCK position (L).

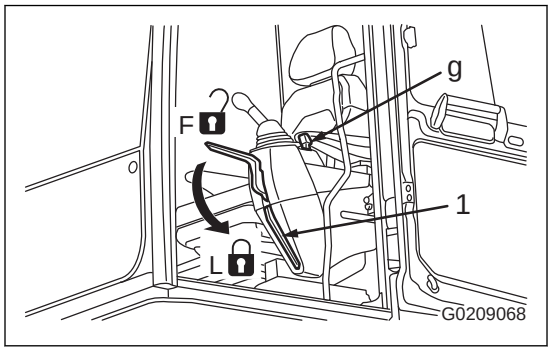

2. Hold the handle (A) and pull down the front roller shade (B) slowly. Hook the end of the front roller shade to the stoppers (C) at the desired position to hold it.

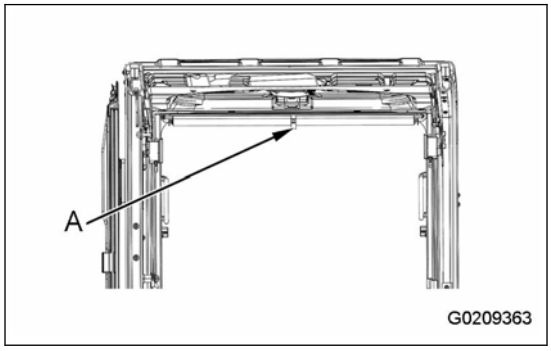

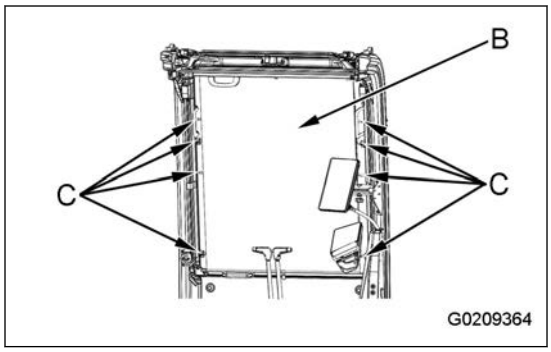

How to stow

1. Hold the handle (A) and remove the front roller shade (B) from the stopper (C).

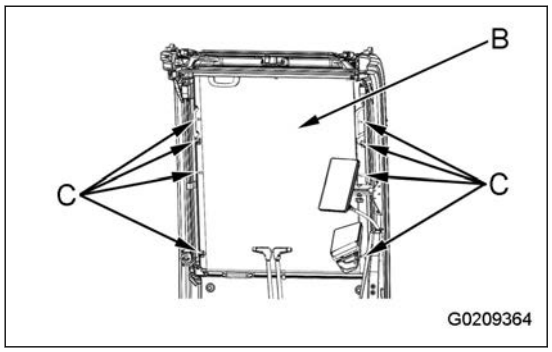

2. While you hold the handle (A), wind up the front roller shade slowly to the state shown in the figure below.

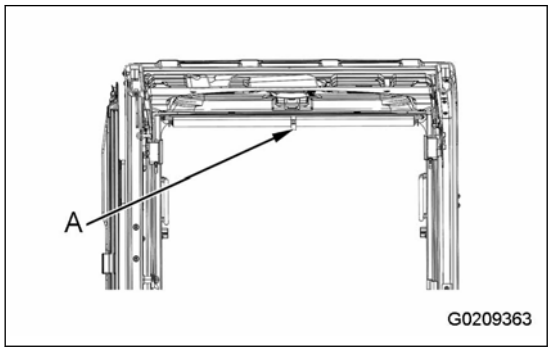

How to Use Ceiling Window Roller Shades

WARNING

- **Do not use the roller shades during the travel operation. It can interfere the visibility.**
- **Before you operate the roller shades, set the lock lever to the LOCK position securely.**
- **If you touch the control lever or control pedal by mistake while the lock lever is at the FREE position, it can cause personal injury or death.**

How to pull out

1. Operate the operating part (g) of the lock lever (1) to set it to the LOCK position (L).

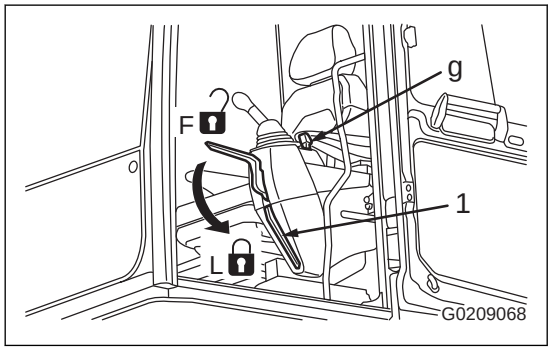

2. Hold the handle (A), pull down the ceiling window roller shades (B) slowly, and put the end part of the ceiling window roller shades to the desired stopper position (C) to stop it.

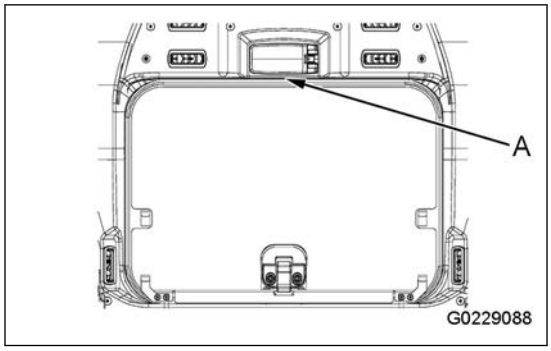

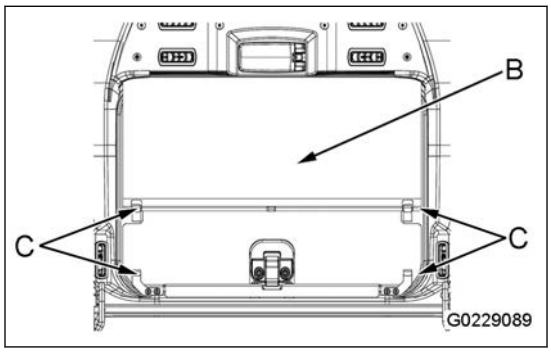

How to stow

1. Hold the handle (A), and remove the ceiling window roller shades (B) from the stopper position (C).

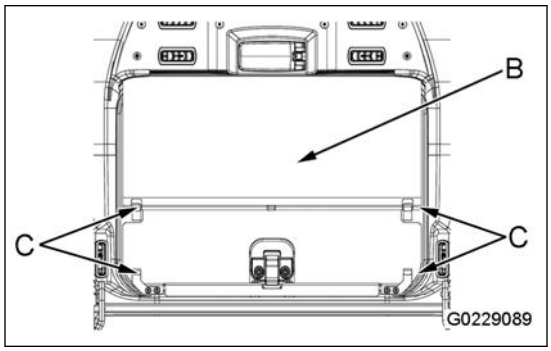

2. While you hold the handle (A), wind up the ceiling window roller shades slowly to the state shown in the figure below.

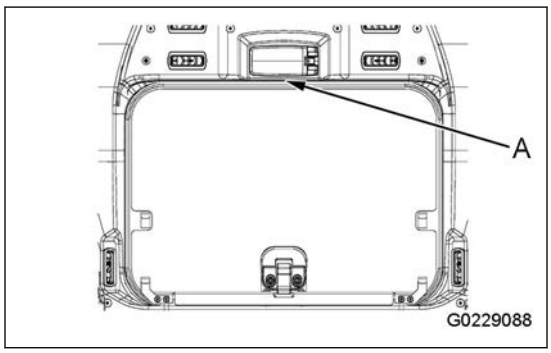

How to Use Rear Roller Shades

(If installed)

⚠ WARNING

- **Do not use the roller shades during travel operations. It can interfere the visibility.**
- **Before you operate the roller shades, set the lock lever to the LOCK position securely.**
- **If you accidentally touch the control lever or control pedal while the lock lever is in the FREE position, it can cause serious personal injury.**

How to pull out

1. Operate the operating part (g) of the lock lever (1) to set it to the LOCK position (L).

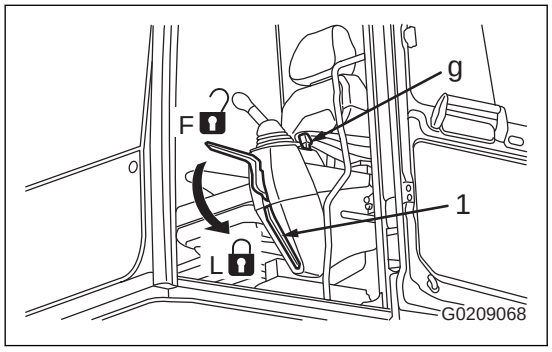

2. Hold the handle (A), pull down the rear roller shade (B) slowly. Put the end of the rear roller shade to the stoppers (C) at the desired position to hold it.

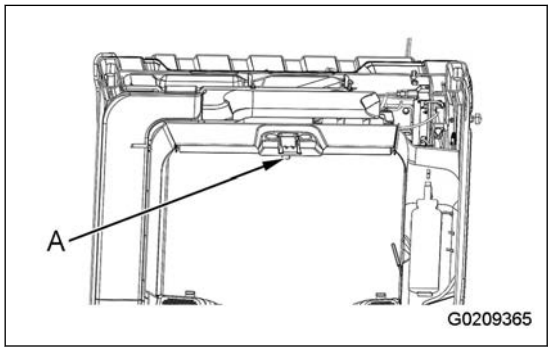

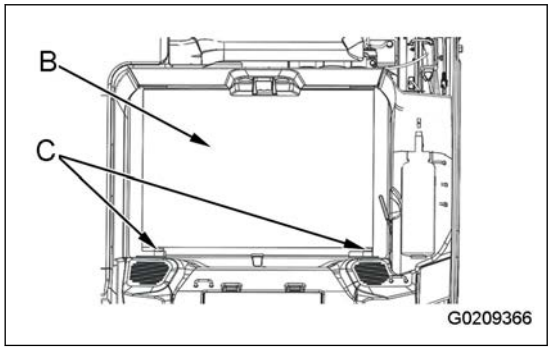

How to stow

1. Hold the handle (A) and remove the rear roller shade (B) from the stopper (C).

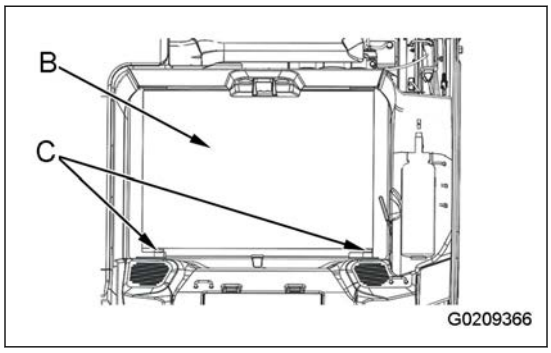

2. While you hold the handle (A), wind up the rear roller shade slowly to the state shown in the figure below.

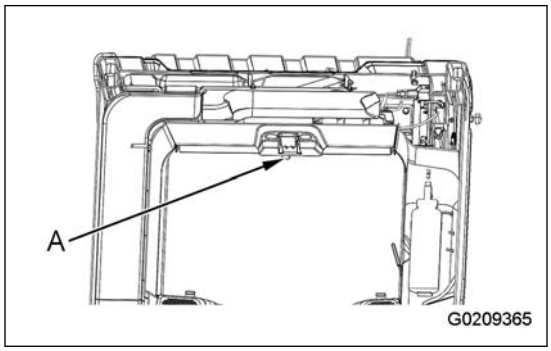

How to Use Side Roller Shades

(If installed)

⚠ WARNING

- **Do not use the roller shades during travel operations. It can interfere the visibility.**
- **Before you operate the roller shades, set the lock lever to the LOCK position securely.**
- **If you accidentally touch the control lever or control pedal while the lock lever is in the FREE position, it can cause serious personal injury.**

How to pull out

1. Operate the operating part (g) of the lock lever (1) to set it to the LOCK position (L).

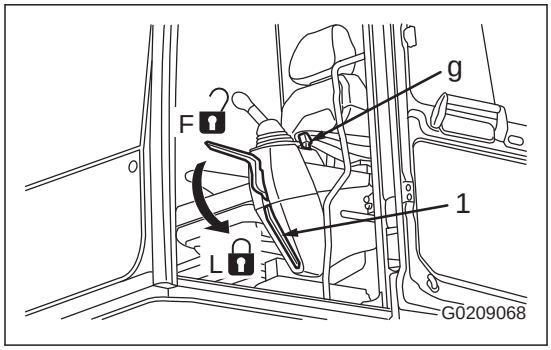

2. Hold the handle (A), pull down the side roller shade (B) slowly. Put the end of the side roller shade to the stoppers (C) at the desired position to hold it.

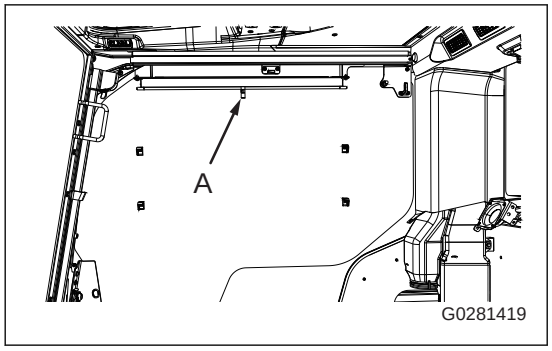

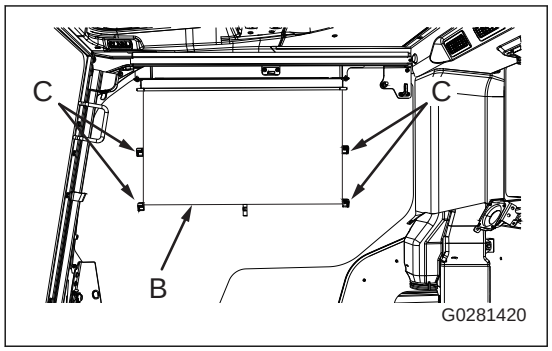

How to stow

1. Hold the handle (A) and remove the side roller shade (B) from the stopper (C).

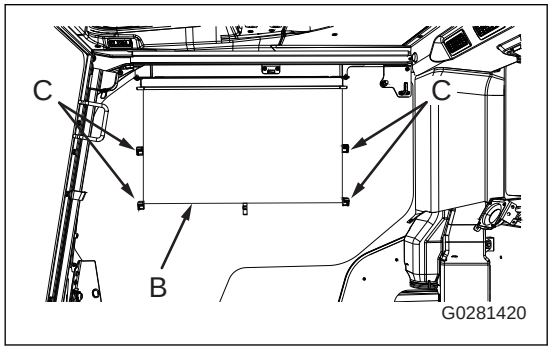

2. While you hold the handle (A), wind up the side roller shade slowly to the state shown in the figure below.

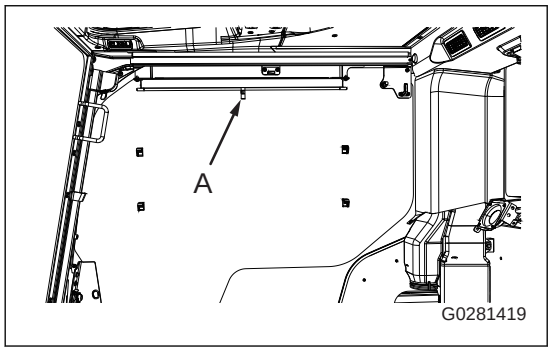

Emergency Escape Hammer

CAUTION

- **If it becomes necessary to break the window glass with the hammer, be very careful not to get injury by broken pieces of glass.**
- **When you escape, remove all the pieces of glass from the window frame. Be careful not to cut yourself on broken glass. In addition, be careful not to slip on the broken pieces of glass on the ground.**

In the event that the cab door cannot be opened, the emergency escape hammer (A) is installed so the operator can escape from the operator's cab in an emergency.

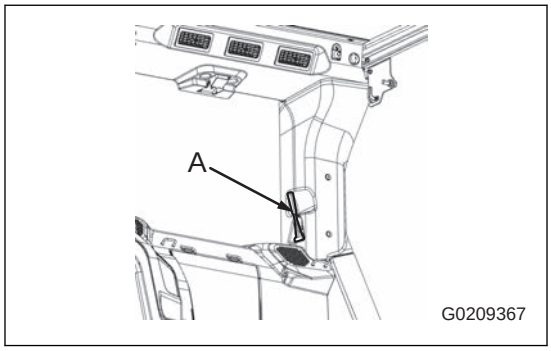

When you escape, hit the window glass with the hammer (A) to break and escape.

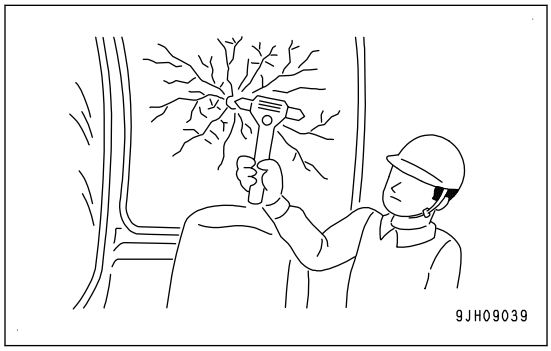

How to Use Door Lock

WARNING

- **When you unlock the door, be sure to stop the machine on a level ground.**
- **Do not unlock the door on a slope. The door can suddenly close. Your hand can be caught and cause an injury.**
- **Do not stick your arm from the cab or put your hand on the door frame when you release the door lock. The door can suddenly close and cause injury.**

1. Use it to fix the door in the open position.
2. Push the door against the catcher part (1) to lock it in position.
   When you close the door, push down the lever (2) on the left side of the operator seat to release the catcher.
3. To keep the door open, fix it securely to the catcher part.

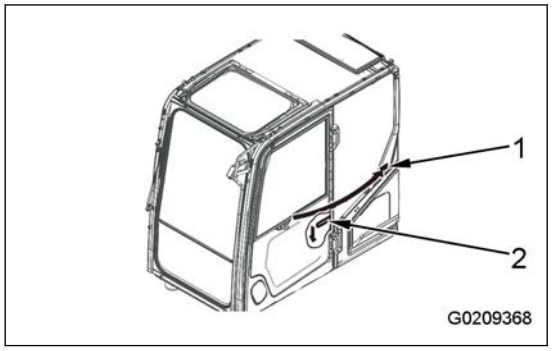

Cap and Cover with Lock

You can open and close the locks on the caps or covers with the key.

Insert the key securely until the bottom part (A), and then turn it. If you turn the key when it is not inserted fully, it can cause damage to the key.

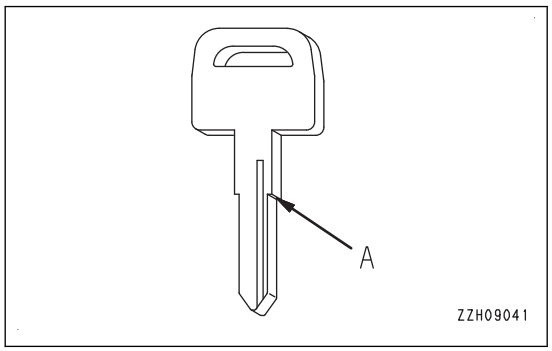

Drink Box

This is on the rear right side of the operator seat. You can store drink containers in it.

Air is blown into the drink box in response to the air conditioner setting.

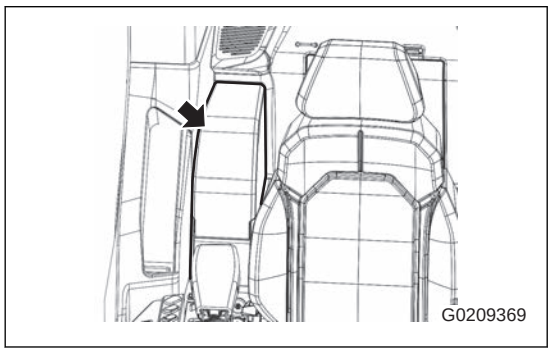

Magazine Box

This is on the right side of the operator seat.

Keep the Operation and Maintenance Manual in the magazine box at all times. So, you can read it when you want.

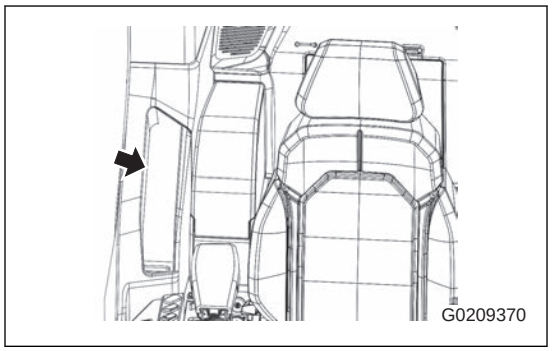

Cup Holder

The cup holder is in the front side of the right console.

Before you use the cup holder, operate the operating part (g) of the lock lever to adjust it to the LOCK position (L).

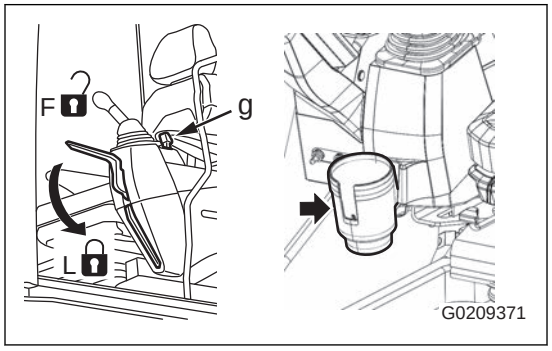

Power Supply Outlet

12V Power Supply

The capacity of the 12 V power supply is 144 W (12 V × 12 A).

When it is used at 1 place: 144 W (12 V × 12 A)

When it is used at 2 places: 144 W in total

REMARK

Use this 12V power supply while the engine is in operation.

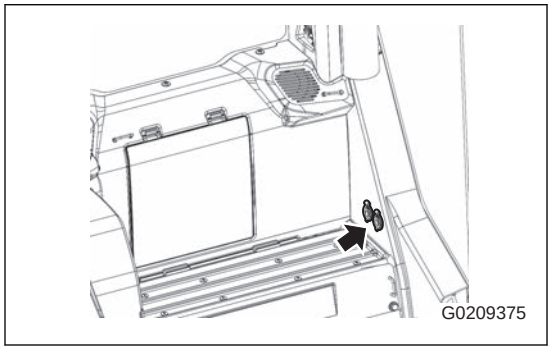

Fuse

NOTICE

Before you replace a fuse, be sure to turn the starting switch to the OFF position. Make sure that the system operating lamp is not lit. Turn the battery disconnect switch to the OFF position.

- The fuse holder is installed at the rear of the operator seat.
- It protects the electrical component and wiring not to burn out.
- If the fuse is corroded and has white powder on it, or there is loose between the fuse holder and fuse, replace it.
- Use a fuse of the same capacity when you replace it.

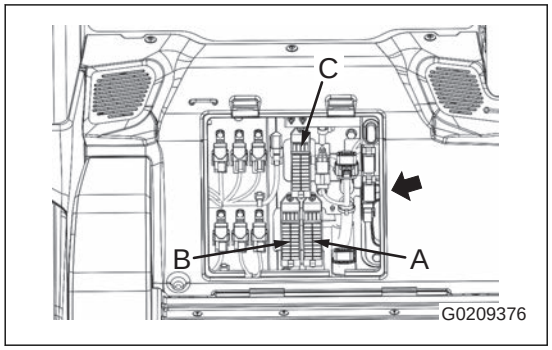

REMARK

- Spare fuses for replacement are installed at the top of the fuse box.
- After the spare fuses are used, restock them immediately.
- Spare fuses include 3 each of 5 A, 10 A, 15 A, and 20 A.

Fuse Box (A)

No.	Fuse capacity	Name of circuit
(1)	20 A	Valve controller 2 (BRY)
(2)	5 A	Swing parking brake cancel switch
(3)	10 A	Swing/boom secondary drive switch
(4)	20 A	Valve controller 1 (BRY)
(5)	5 A	Radio control receiver, radio control revolving lamp
(6)	5 A	PPC oil pressure lock solenoid
(7)	10 A	3rd party component connector (BRY)
(8)	-	-
(9)	5 A	Washer motor
(10)	-	-
(11)	15 A	Wiper motor
(12)	10 A	Tilt rotator controller
(13)	5 A	-
(14)	10 A	-
(15)	5 A	Auto/manual preheat
(16)	5 A	Laser catch
(17)	20 A	Air conditioner unit
(18)	5 A	Travel alarm
(19)	10 A	Work equipment controller (BRY)
(20)	-	-
(21)	5 A	Spare
(22)	10 A	Spare
(23)	15 A	Spare
(24)	20 A	Spare

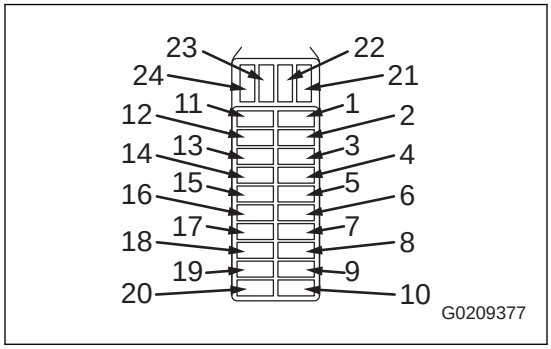

Fuse box (B)

No.	Fuse capacity	Name of circuit
(1)	5 A	Valve controller 2 (BATT), work equipment controller (BATT), system operating lamp, DEF protection circuit relay
(2)	20 A	Engine controller
(3)	20 A	Starter signal unit
(4)	15 A	Working lamp (boom, deck)
(5)	15 A	Working lamp (counterweight)
(6)	20 A	Working lamp (on cab)
(7)	5 A	Horn
(8)	-	-
(9)	-	-
(10)	-	-
(11)	10 A	Keypad, 24V power supply
(12)	10 A	Valve controller 1 (BATT), gateway function controller, air conditioner ECU backup
(13)	15 A	Air suspension seat
(14)	15 A	Navigation controller, GNSS receiver, ICT monitor
(15)	10 A	Monitor controller, KomVision controller, radio, room lamp
(16)	10 A	-
(17)	10 A	Optional power supply (continuous power supply)
(18)	15 A	ICT service connector, 3rd party component connector (BATT)
(19)	10 A	Optional power supply (1)
(20)	20 A	Optional power supply (2), 12V power supply
(21)	5 A	Spare
(22)	10 A	Spare
(23)	15 A	Spare
(24)	20 A	Spare

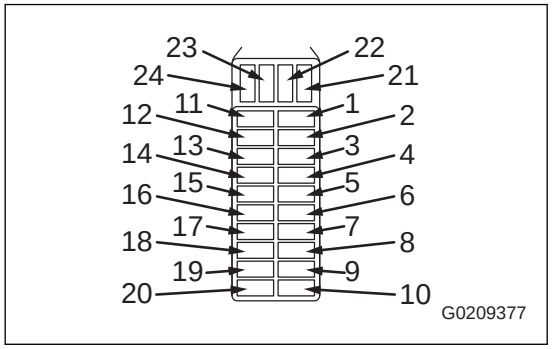

Fuse box (C)

No.	Fuse capacity	Name of circuit
(1)	20 A	DEF protection circuit
(2)	5 A	IG signal
(3)	5 A	ACC signal
(4)	5 A	Air conditioner ECU power supply signal
(5)	-	-
(6)	-	-
(7)	20 A	Sensor power supply relay
(8)	10 A	Sensor power supply relay
(9)	10 A	DEF pump
(10)	20 A	DEF heater
(11)	5 A	Ceiling window washer motor
(12)	10 A	Ceiling window wiper motor
(13)	5 A	Multifunction switch lever power supply
(14)	-	-
(15)	-	-
(16)	-	-
(17)	10 A	Engine service connector
(18)	5 A	Radio controller power supply
(19)	5 A	Automation controller
(20)	-	-
(21)	5 A	Spare
(22)	10 A	Spare
(23)	15 A	Spare
(24)	20 A	Spare

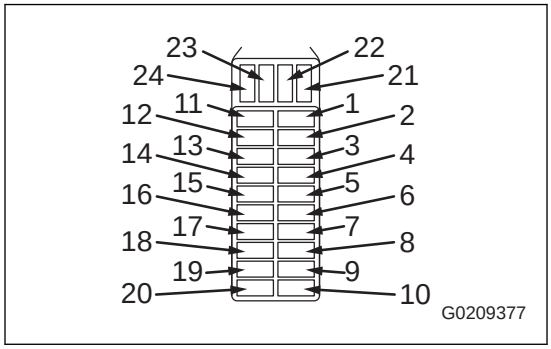

Fusible Link

NOTICE

Before you replace a fusible link, be sure to turn the starting switch to the OFF position. Make sure that the system operating lamp is off. Turn the battery disconnect switch to the OFF position.

If the starting motor does not operate, the electrical components of the cab do not operate, or the preheater does not operate when the starting switch is turned to the START position, there can be an open fusible link in the wiring harness. Open the cover on the left side of the machine. Examine the fusible link, and replace it if necessary.

REMARK

A fusible link is the large-sized fuse wiring installed to the circuit with large current flow. It protects the electrical components and wiring from abnormal current not to burn out in the same procedure as a normal fuse.

No.	Capacity	Name of circuit	Connector No.	Part number
(1)	65 A	Main power supply	F04	22U-06-11270
(2)	65 A	Continuous power supply	F05	22U-06-11270
(3)	60 A	Continuous power supply	F06, F07	2A5-06-52450
(4)	80 A	Preheat	F11, F12	421-06-22820

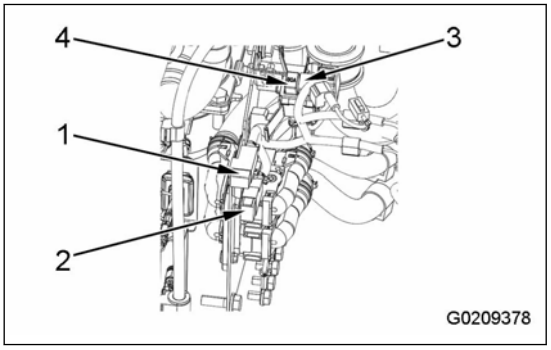

Tool Box

When you open the tool case cover, you will find the standard tool box. Put tools in the attached tool bag to store tools.

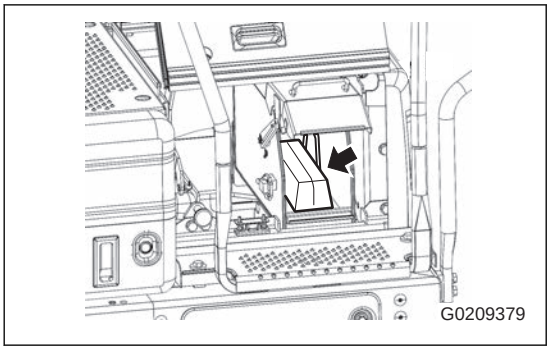

Grease Pump Holder

It is installed in the cover at the left side of the machine. Keep the grease pump hung on the grease pump holder while it is not used.

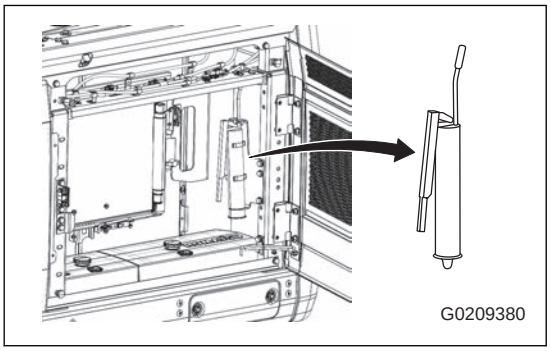

Fire Extinguisher

(If equipped)

You can fix the fire extinguisher in the position (A) shown in the figure.

For the parts necessary to fix it, consult your Komatsu distributor.

The instructions are shown on the nameplate attached to the fire extinguisher. Carefully read and understand them for the possibility of fires.

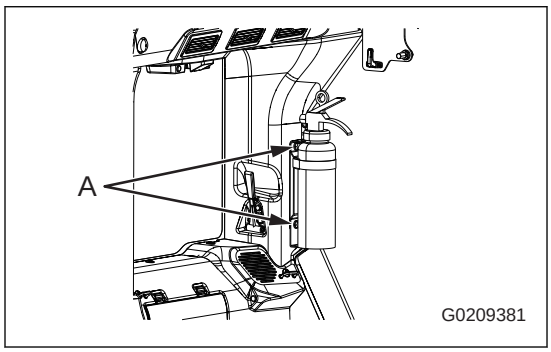

Battery Disconnect Switch

⚠ CAUTION

- **Do not operate the battery disconnect switch while the engine is in operation.**
  The large current occurred from the alternator can burn the electric parts and it causes a fire in some cases.
  Operate the battery disconnect switch only while the engine stops.
- **Make sure that the system operating lamp is not on before you do the inspection and maintenance.**
  The power supply is possibly not cut out for a specified time even if the battery disconnect switch is turned to the OFF position while the system operating lamp is on.
- **When the battery disconnect switch is set to the OFF position, be sure to remove the switch key.**
  If others accidentally turn the key to the ON position, it is very dangerous.

NOTICE

- **Keep the battery disconnect switch in the ON position in the cases other than that follow.**
  - **When you store the machine for a long time (more than a month)**
  - **When you repair the electrical system**
  - **When you do the electric welding**
  - **When you handle the battery**
  - **When you replace the fuse or such**
- **Do not turn the battery disconnect switch to the OFF position while the system operating lamp is on. If it is set to the OFF position while the lamp is on, the data in the controller can be lost, and a system error can occur.**
- **If it is set to the OFF position, all the electrical systems are cut out, and the functions of KOMTRAX stop. In addition, it can cause the loss of clock time and radio tuning information. In this case, set them again. For details, see “Clock Adjustment (3-99)” and “Handle Radio Sound System (3-334)”.**
- **When the Operator ID Setting or the Operator Authentication Setting is OFF, set the battery disconnect switch to the OFF position at the end of the day's work and lock it.**

The battery disconnect switch (1) is a switch that cuts out the electricity from the battery.

It is found in the cover at the left side of the machine.

Lift the rubber cover (2) to find the switch.

REMARK

Operate it while the system operating lamp (3) is off.

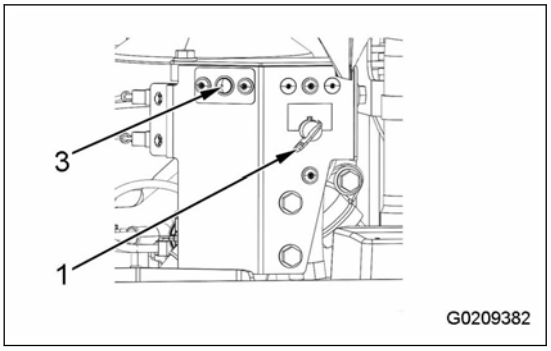

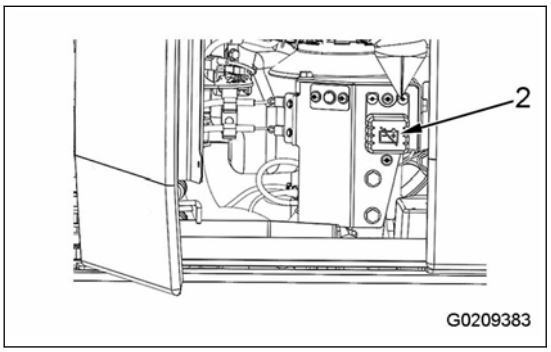

(O): OFF position

You can insert or pull out the switch key (1), and the electric current from the battery is cut out.

(I): ON position

The electric current from the battery flows into the circuit.

Before you start the machine, be sure to set it to this position.

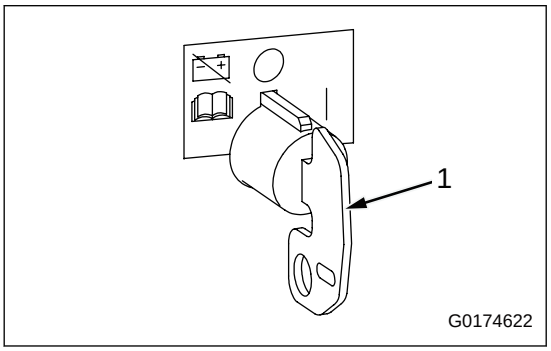

Operate Battery Disconnect Switch

The battery disconnect switch can be locked out with the hasp (1) and padlock (2) at the position where the switch key (3) is in the OFF position.

NOTICE

- **Prepare an applicable padlock (2) by yourself.**
- **If the hasp (1) is broken or lost, purchase the same hasp (part number: 17A-54-55280) which is attached to the machine, or procure it locally.**
- **Be sure to check the items that follow before the lock-out.**
  - **Battery disconnect switch must be locked out with the hasp (1) and padlock (2).**
  - **You cannot move the switch key (3) to the ON position while it is in the locked out condition.**
  - **The system operating lamp (4) does not light up.**

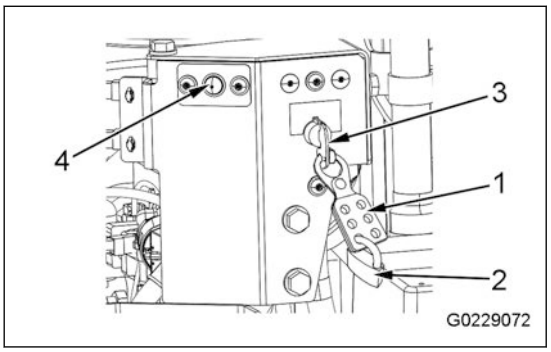

System Operating Lamp

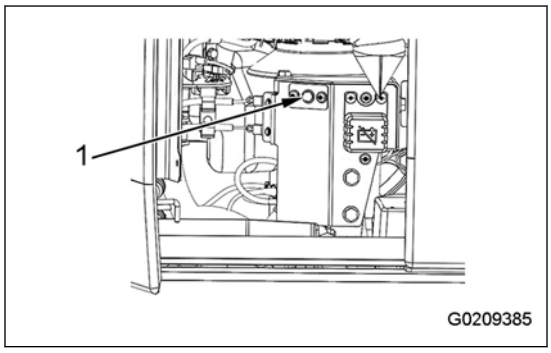

The system operating lamp (1) shows that the power is supplied to the controller that is installed to the machine.

The system operating lamp (1) comes on when the power is supplied to the controller. It normally goes off in 1 to 7 minutes after the starting switch is turned to the OFF position.

Before you operate the battery disconnect switch, make sure that the system operating lamp (1) is not on.

NOTICE

If the battery disconnect switch is set to the OFF position while the system operating lamp is on, the data in the controller can be lost. A system error can occur.

REMARK

- Even if the starting switch is in the OFF position, the controller operates in some cases. The system operating lamp comes on at this time, but it is not a problem.
- After the starting switch is turned to the OFF position, the system operating lamp possibly stays on for a long time.
  Consult your Komatsu distributor if the system operating lamp stays on for a long time.
- While the DEF system devices are in operation, the system operating lamp comes on to purge the DEF to the tank.
  Do not set the battery disconnect switch to the OFF position while the system operating lamp is on.
- Even if the system operating lamp is not on, the lamp can illuminate in the dark because of very small leakage of current in the controller. It is not a problem.

Handle Komatsu Diesel Particulate Filter (KDPF)

⚠ CAUTION

- **The exhaust gas temperature during the aftertreatment devices regeneration can be high, and the temperature possibly stays high even after the regeneration is completed.**
  Do not come near the exhaust pipe outlet and around the aftertreatment devices not to get burn injury.
  Also, do not let flammable materials be near the outlet of the exhaust pipe or the aftertreatment devices to prevent fire.
- **When there are thatched houses, dry leaves or pieces of paper near the jobsite, set the system to the regeneration disable setting. This is to prevent the danger of fire caused by hot exhaust that occurs during the aftertreatment devices regeneration.**

KDPF is a device to capture soot in the exhaust gas to clean the exhaust gas.

If soot is accumulated to some level in the KDPF, a purification procedure to burn the soot is done automatically to keep the filtering performance of the KDPF high.

This purification treatment is known as “regeneration”.

If operations which lower the purification function of KDPF continues for long hours, the regeneration starts to prevent damage on the KDPF system, regardless of the quantity of the accumulated soot.

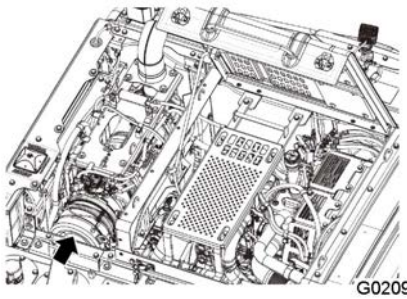

During the KDPF regeneration, the aftertreatment devices regeneration indicator (1) in the indicator display area of the machine monitor comes on.

REMARK

Even if the aftertreatment devices regeneration indicator (1) comes on, you need not stop the machine. You can continue the work unless a caution lamp is shown in the center of the machine monitor.

The KDPF regeneration usually starts automatically. In some operating conditions, the accumulated soot is not burned sufficiently, or the deteriorated purification function is not adequately recovered.

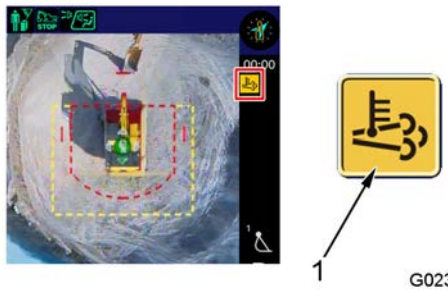

In that case, the KDPF soot accumulation caution lamp (2) comes on. Stop the machine in a safe area, and start the manual stationary regeneration.

There are 2 levels of the machine monitor display that require manual stationary regeneration in response to the level of urgency.

If the lock lever is in the LOCK position, the manual stationary regeneration is possibly started automatically to protect the KDPF.

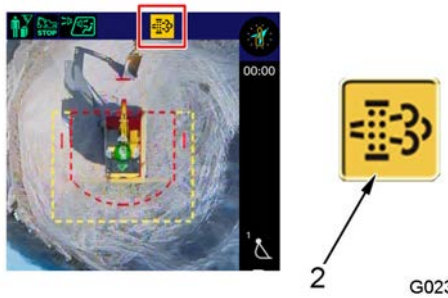

NOTICE

Do not stop the engine while the aftertreatment devices regeneration is in operation.

When you stop the engine, stop the aftertreatment devices regeneration first. Run the engine at low idle for approximately 5 minutes. Then stop the engine.
When the action level "L03" comes on in red, and the KDPF soot accumulation pilot lamp (2) comes on in red, the engine power limitation is activated. To restore the engine power, do "Procedure for Manual Stationary Regeneration".
When the accumulated soot in the KDPF exceeds the specified level, and if you do not do the "Procedure for Manual Stationary Regeneration", the action level "L04" comes on in red. Stop the machine immediately, and consult your Komatsu distributor for the inspection and maintenance.

REMARK

- You can see the soot accumulation level (4) in "Aftertreatment Device Regeneration" tab (d).

  Show "Aftertreatment Device Regeneration" screen (d) of the user menu.
- When Aftertreatment Device Regeneration is required or Aftertreatment Device Regeneration is almost required, the Menu icon is shown in highlight. For details, see "User Menu (3-51)".
- You can see the remaining regeneration time (5) in "Aftertreatment Device Regeneration" tab (d). The remaining regeneration time shown is an approximate value and can be different from the actual regeneration time.

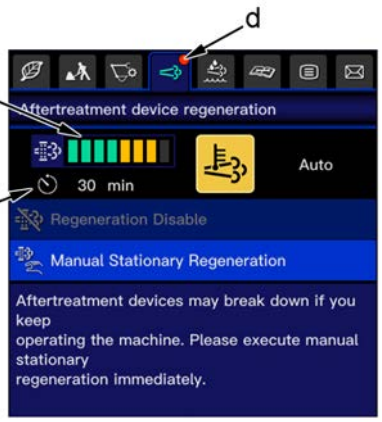

- The KDPF can naturally burn soot in the filter with a high-performance catalyst and high exhaust heat. In some operating conditions, the soot possibly decreases without regeneration.
- Even when the soot accumulation level is low, the automatic regeneration is done, and the manual stationary regeneration request is done to protect the system in some cases. If you run the engine at idle continuously, the regeneration starts frequently, but this is not a problem.
- Even immediately after the regeneration is completed, the soot accumulation level does not become "0". This is caused by the accumulated non-flammable material in the exhaust gas, and this is not a problem.
- Non-flammable material that cannot be burned by regeneration also accumulates in the KDPF filter. It is necessary to clean or replace the filter at specified intervals.
- The engine speed or engine sound occasionally changes during or after the regeneration. This is caused by the control for better regeneration. This is not a problem.
- The smell of the exhaust gas is different from that of the conventional diesel engine because of the exhaust gas filtering function.
- White smoke comes out occasionally for a short time, immediately after the engine starts or during the regeneration in the cold season. This is not a problem.
- Komatsu recommends that you use the Komatsu genuine engine oil for the KDPF. If engine oil other than Komatsu genuine oil for the KDPF is used, the cleaning interval of the KDPF filters become shorter or there can be bad effects on the engine such as reduced lubrication function by deteriorated oil, and it can cause

machine failure. In addition, the regeneration interval becomes shorter, and the fuel consumption increases in some cases.

- Ash can be accumulated easily in the KDPF for the bio-fuel. Accordingly, the regeneration of the KDPF can be done more frequently if the mixing ratio of the bio-fuel is high.

REMARK

If heavy-duty operation is done for more than 30 minutes while the fuel control dial is below the midpoint between low idle (MIN) and high idle (MAX), accumulated soot can increase in rare cases, and action level “L03” can be shown. This is not a problem.

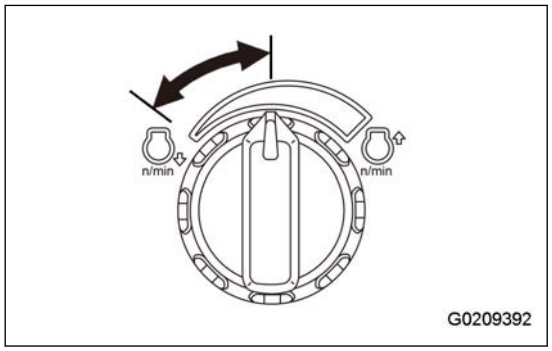

Start and complete a manual stationary regeneration. Turn the fuel control dial to above the midpoint between low idle (MIN) and high idle (MAX) to do the work.

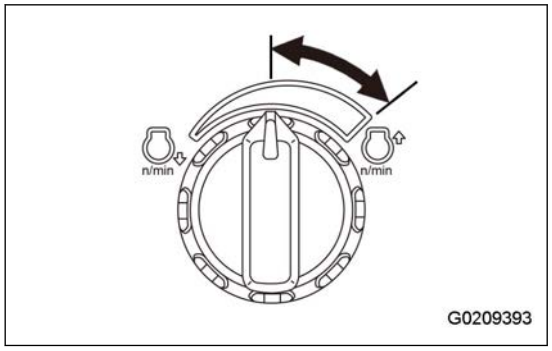

When Urgency is Low

- If the KDPF soot accumulation caution lamp (2) comes on in yellow (action level (3): “L01”), the screen (A) is shown first.
- The action level goes off after 2 seconds. The screen changes to the standard screen (B).
- When you set the lock lever to the LOCK position or set all the control levers and control pedals to the NEUTRAL position, the screen changes to “Aftertreatment Device Regeneration” screen (C) after 3 seconds only the first time.
  If the accumulated soot does not decrease after that, “Aftertreatment Device Regeneration” screen (C) is shown for 30 seconds every 2 hours.
- If the KDPF soot accumulation caution lamp (2) comes on in yellow, stop the machine in a safe area after you complete the work, and start the manual stationary regeneration.

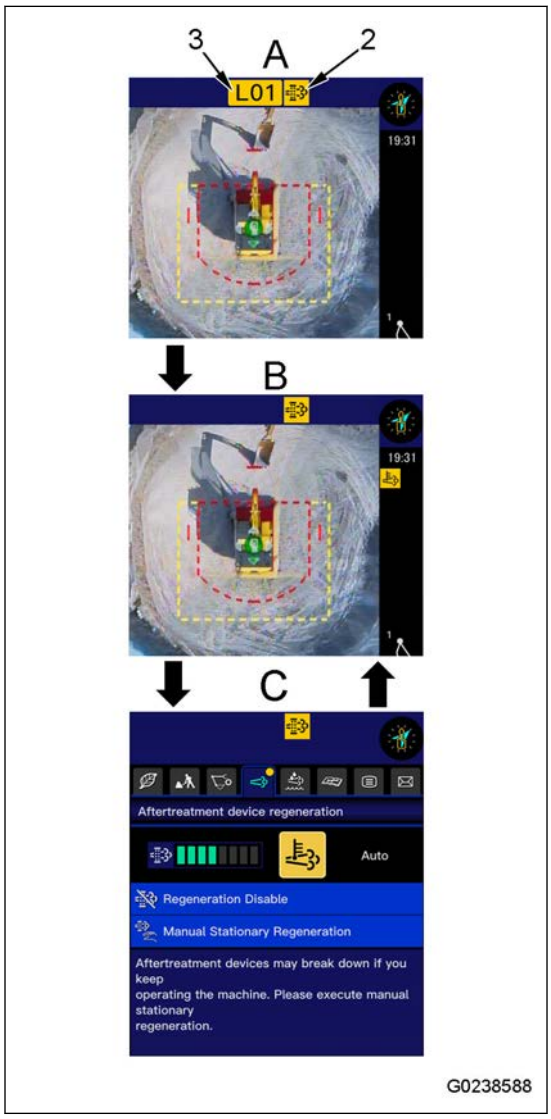

When Degree of Urgency is High

- The KDPF soot accumulation caution lamp (2) comes on in red, and the action level (3) “L03” comes on in red.
- When you set the lock lever to the LOCK position or set all the control levers and control pedals to the NEUTRAL position, the screen changes to “Aftertreatment Device Regeneration” screen (C) after 3 seconds. After that, “Aftertreatment Device Regeneration” screen (C) and standard screen (D) are automatically shown alternately in response to the lever operation until you do a manual stationary regeneration.

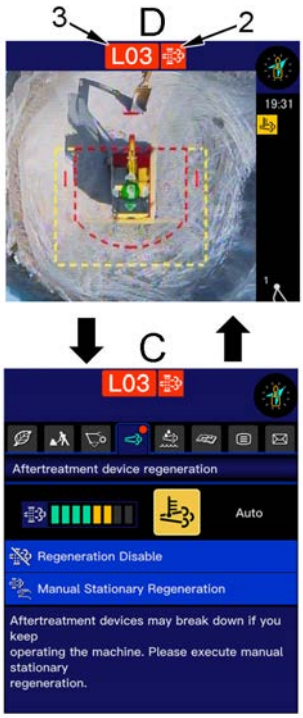

G0238589

Procedure for Manual Stationary Regeneration

⚠ CAUTION

During Aftertreatment Device Regeneration, the exhaust gas temperature can be higher than that of conventional models. Do not come near the exhaust pipe outlet and around the aftertreatment devices not to get burn injury. Also, do not let flammable materials be near the outlet of the exhaust pipe or the aftertreatment devices to prevent fire.

G0238590

1. Move the machine to a safe area, keep the engine in operation, and stop the machine.
2. Make sure that there is no person or flammable material around the machine (especially in the direction of the exhaust gas flow).
3. Operate the operating part (g) of the lock lever to set it to the LOCK position (L).
   Unless it is set to the LOCK position, you cannot do the manual stationary regeneration.

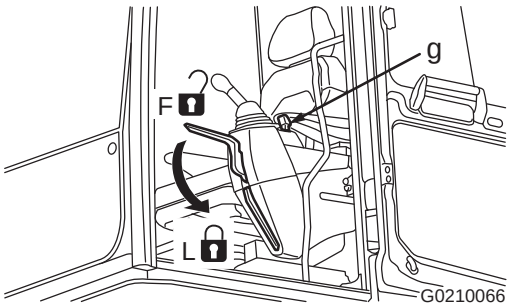

G0210066

4. Set the fuel control dial to the Low idle (MIN) position.

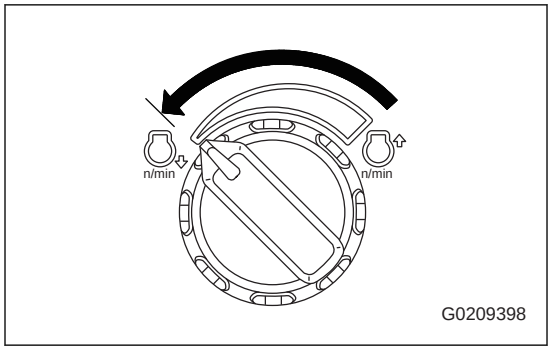

5. Show “Aftertreatment Device Regeneration” tab (d) of the user menu.

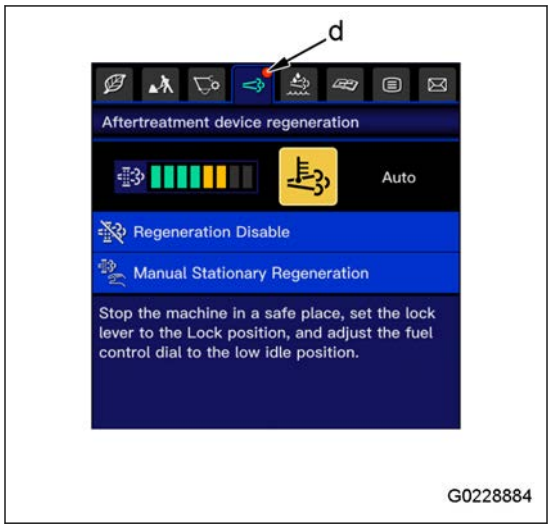

REMARK

If the machine is in a condition that Aftertreatment Device Regeneration cannot be done, the screen in the figure is shown. See the message. Do as the instructions.

If this does not make Manual Stationary Regeneration possible, tap the Maintenance Tab (f) of the User Menu and tap the Current Abnormality (6) to see the details of the failure. Stop the work. Do inspection and maintenance.

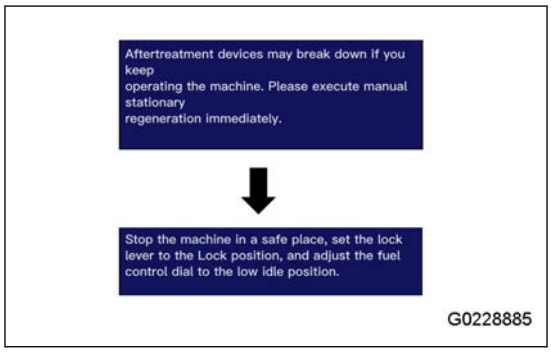

6. Select Manual Stationary Regeneration. Secure the safety around the machine and make sure that there is no person or flammable material again. Tap the checkmark button.
If the machine needs to be moved again for the safety, move it to a safe area and do the procedure from the step 1 again.

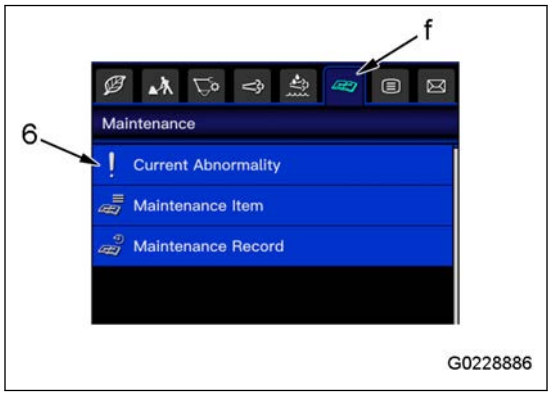

7. This screen is shown during Manual Stationary Regeneration. It can take 40 minutes or more to complete Manual Stationary Regeneration. Do not operate the screen or the fuel control dial until the regeneration is completed and the screen goes back to the standard screen.

REMARK

- The Manual Stationary Regeneration can be done when Aftertreatment Device Regeneration is required.
- You can see the state of Manual Stationary Regeneration for soot accumulation by the number of lit segments of the soot accumulation level (4). When all the segments of the soot accumulation level go off, the manual stationary regeneration is completed.
- The time required for Manual Stationary Regeneration changes by the soot accumulation level or the ambient temperature at the start. If the regeneration starts at soot accumulation level “6” or higher, it possibly takes approximately 2 hours to complete.
- You can see the remaining regeneration time (5) on “Aftertreatment Device Regeneration” screen. The remaining regeneration time shown is an approximate value and can be different from the actual regeneration time.
- Manual Stationary Regeneration for system protection can start even when the soot accumulation level is “0” to “3”. The soot accumulation level does not decrease in some cases, but it is not a problem. The current state is not shown on the machine monitor, but it completes in approximately 10 minutes.
- If the lock lever or the fuel control dial is operated during Manual Stationary Regeneration, the regeneration is stopped automatically. Turn the lock lever back to the LOCK position (L). Turn the fuel control dial back to the Low idle (MIN) position. Do the procedure again from step 6.
- If you need to move the machine during Manual Stationary Regeneration, set it to Regeneration Disable temporarily before you move the machine. See the Aftertreatment Device Regeneration disable and cancel of disable procedures given below.
  When you start Manual Stationary Regeneration again, keep the safety of the machine and around it. Cancel Regeneration Disable.

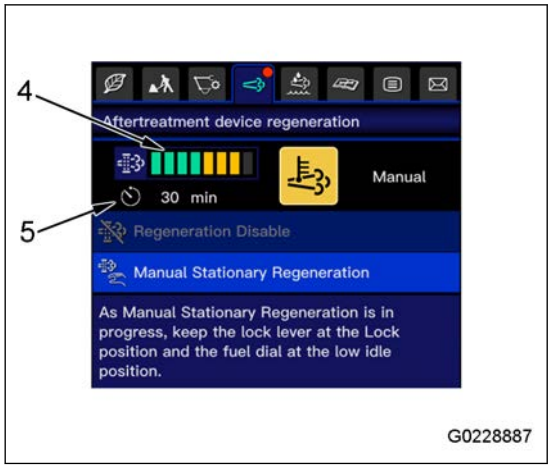

8. After Manual Stationary Regeneration is completed, the screen automatically goes back to the standard screen.

Procedure for Aftertreatment Devices Regeneration Disable Setting

You can set the regeneration of aftertreatment devices not to start automatically when you do not want the exhaust temperature raised by automatic active regeneration, such as when flammable materials are around the machine. Also, you can stop the regeneration that is currently in operation.

NOTICE

Even if regeneration is disabled, the KDPF soot accumulation caution lamp (1) comes on if soot accumulates and a Manual Stationary Regeneration becomes required. If the KDPF soot accumulation caution lamp comes on, move the machine to a safe area. Start Manual Stationary Regeneration.
If you continue the operation without Manual Stationary Regeneration, it can cause failure of the KDPF or engine.

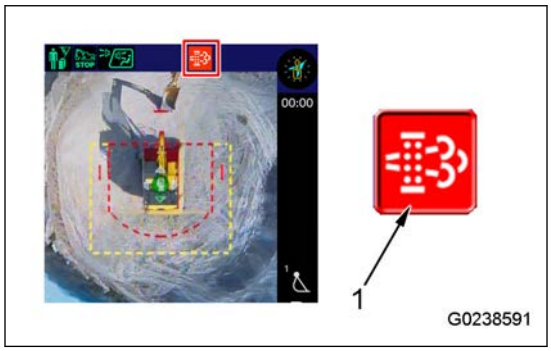

Setting to Regeneration Disable when Regeneration is Not in Operation

(When the aftertreatment devices regeneration indicator is not lit on the standard screen)

1. Tap “Menu Icon” to open the User Menu.

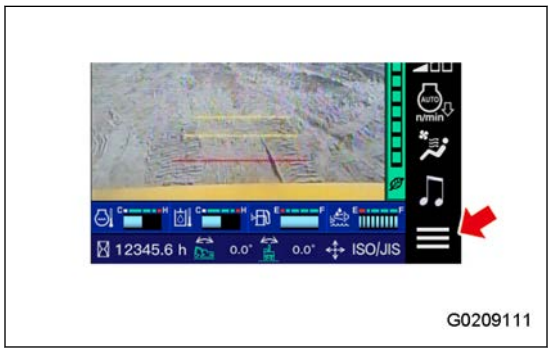

2. Show Aftertreatment Device Regeneration tab (d) in the user menu.
3. Tap the Regeneration Disable to stop the regeneration function. Regeneration will not start.

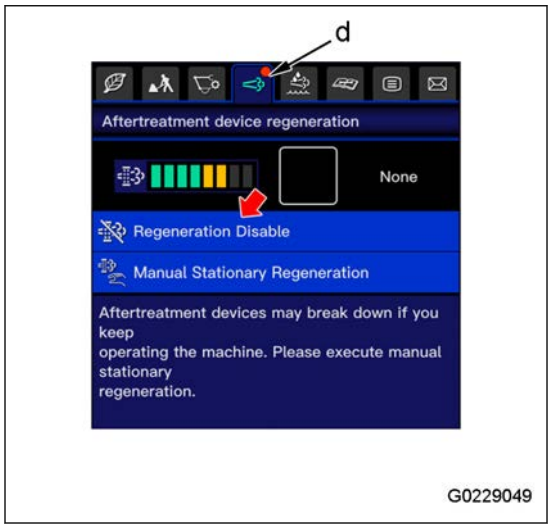

REMARK

- You can know the regeneration is disabled by the After-treatment Device Regeneration disable indicator (2) shown with a slash on the standard screen.
- The Regeneration Disable setting is canceled when you turn the starting switch to the OFF position. If you have to keep automatic regeneration disabled, do the procedure above each time you start the engine.
- During a regeneration for system protection, Aftertreatment Device Regeneration indicator (3) can come on even if set to Regeneration Disable, but this is not a problem. During a regeneration for system protection, a Regeneration Disable operation cannot be done.
- In the regeneration to prevent damage on the system, the exhaust temperature is lower than that of when the regeneration is done to burn soot, and is almost the same level as the normal exhaust gas temperature.

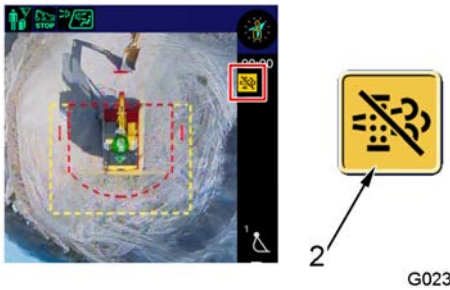

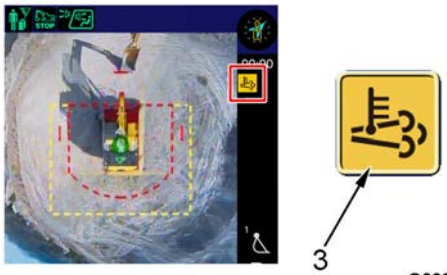

Setting to Regeneration Disable when Regeneration is in Operation (Stop Regeneration)

(When Aftertreatment Device Regeneration indicator (3) is on on the standard screen)

1. Show Aftertreatment Device Regeneration tab (d) in the user menu.

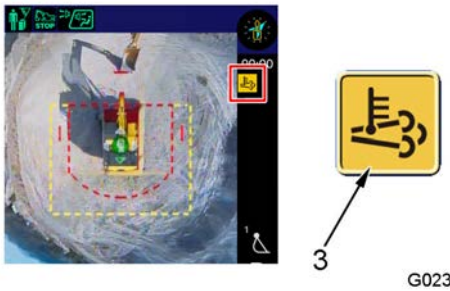

2. Select Regeneration Disable. Tap the checkmark button on the Confirmation Menu. The regeneration stops.

   REMARK

   In the regeneration to protect the system, there is a possibility that the regeneration cannot be disabled. It is not a problem.

G0228888

Procedure to Cancel Aftertreatment Device Regeneration Disable

⚠ CAUTION

When you cancel the regeneration disable, move the machine to a safe area, make sure that there is no person or flammable material around the machine, and start the operation to cancel the regeneration disable.

1. Show “Aftertreatment Device Regeneration” tab (d) of the user menu.

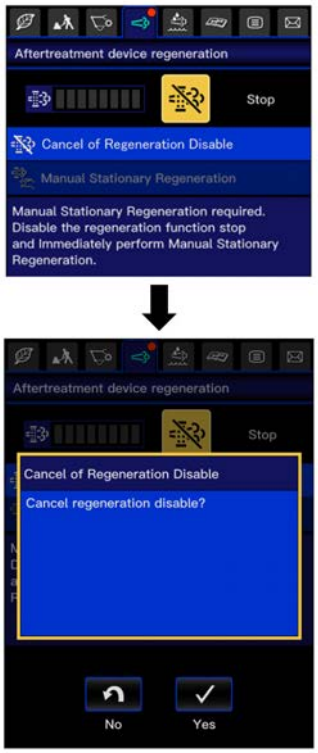

G0228889

2. Select Cancel of Regeneration Disable. Tap the check-mark button on the Confirmation Menu.

   The regeneration disable is cancelled.

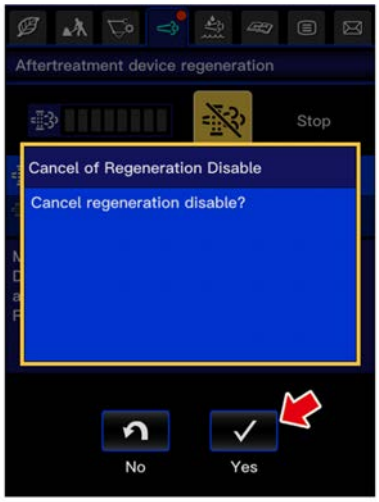

G0228890

If 3 or more segments of the soot accumulation level (4) are on, the regeneration starts automatically.

REMARK

- Before you cancel the regeneration disable, set the lock lever to the LOCK position and set the fuel control dial to low idle position, and then cancel the regeneration disable.
- The Regeneration Disable setting is also canceled when you turn the starting switch to the OFF position to stop the engine.

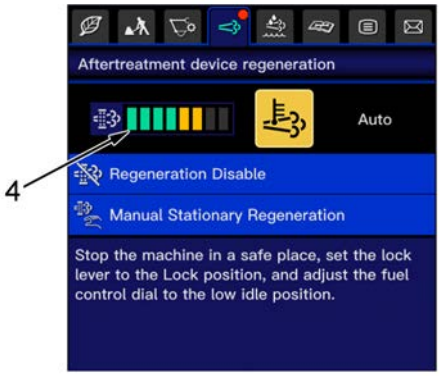

G0228891

Handle Urea SCR System Warning

The urea SCR System is a device which decomposes harmful nitrogen oxides (NOx) in the exhaust gas into harmless nitrogen and water. DEF is sprayed into the exhaust gas to let nitrogen oxides and ammonia from the DEF react for the conversion to nitrogen and water.

The urea SCR system has functions to monitor the system operation and to save information of the abnormal state. It gives warnings to the operator to let the operator do the remedies. By this function, the operator can see the abnormality on the machine monitor screen. If a problem occurs, it also has a function to restore the system temporarily.

The urea SCR system consists of the DEF system and SCR assembly.

DEF is supplied from the DEF system into the exhaust system.

The DEF system consists of the DEF tank (1), DEF hose (2), DEF pump (3), and DEF injector (4). The SCR assembly is shown by (5).

If the filter function of the urea SCR system is degraded in some operation conditions, the active regeneration starts to protect the urea SCR system regardless of the quantity of soot accumulated in the KDPF.

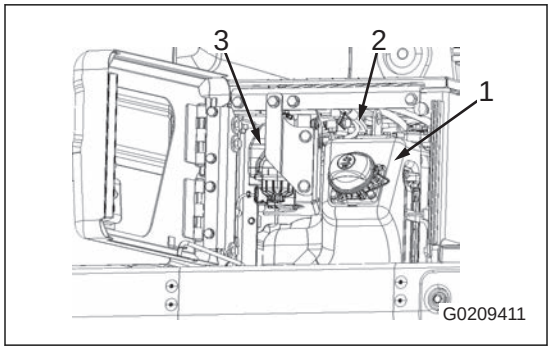

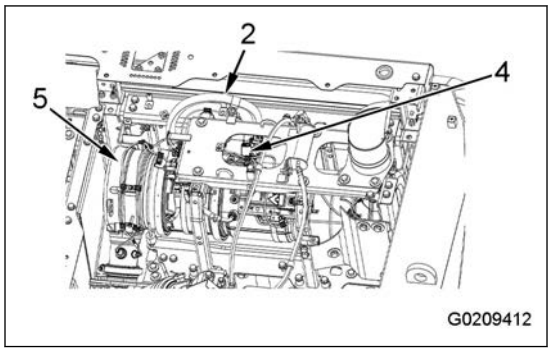

WARNING

Do not put fluid other than DEF into the DEF tank. If diesel fuel or gasoline is added into the tank, it can cause a fire.

NOTICE

- **If foreign material goes in the DEF system or urea deposits caused by dryness occur, the devices can have a malfunction.**
  Do not disassemble or make changes to the DEF system devices other than replacement of the DEF filter.
- **Do not paint the injector or pump. The paint can deteriorate the devices. When you paint the areas around the DEF system injector and pump parts, be careful not to let the paint get on the injector and pump body.**
- **If additive or water is mixed into DEF, the devices cannot operate correctly. The machine will not meet exhaust gas regulations. In addition, it can cause damage to the engine system. If the liquid other than DEF is added, consult your Komatsu distributor.**

Operation of Urea SCR System

The urea SCR system automatically starts the devices when the engine starts.

Even after the starting switch is turned to the OFF position, the devices will be in operation for some minutes. DEF in the piping, injectors, and supply pump is purged back to the tank. It is not a problem. If DEF goes back to the tank, the devices stop automatically.

Do not set the battery disconnect switch to the OFF position while the DEF system is in operation. After the DEF system is stopped, make sure that the system operating lamp is off, and turn off the battery disconnect switch.

Operation in Cold Weather

DEF freezes at -11 ℃ {-12.2 ℉}.

The urea SCR system has a heating function. If DEF is frozen while the machine is parked in cold weather, this function thaws it. Also, it prevents the freezing of DEF during operation.

If DEF freezes while the machine is stopped, the heating system automatically starts to thaw frozen DEF when the engine starts. The devices operate only after DEF is thawed and supplied. It is not a problem.

This heating device starts automatically to prevent freezing of DEF each time the ambient temperature becomes low and decreases below a specified temperature.

When the ambient temperature decreases to the level at which DEF cannot flow correctly, the DEF system automatically starts the purification, and sends the remaining DEF in the DEF system back to the tank. The system stops the supply and injection while the heating device operates.

When the ambient temperature increases to the level at which the DEF system function operates correctly, the DEF system automatically starts the supply and injection again.

Short duration of white smoke from the exhaust pipe can come out after the engine starts in cold weather. But it is not a problem.

Inducement Strategy When DEF Tank Level Becomes Low

When the DEF level in the tank becomes low, the warning starts. If the warning is shown, add DEF immediately.

The DEF level caution lamp (1) on the machine monitor comes on, the alarm buzzer operates, the action level is shown, and Inducement starts. Inducement derates the engine output, restricts the travel speed, and gives a notification to repair the SCR system with other warnings.

The warning level changes in 5 steps: “Warning”, “Escalated Warning”, “Mild Inducement”, “Severe Inducement”, and “Final Inducement”.

The DEF level caution lamp (1) on the machine monitor comes on. The alarm buzzer operates. The action level is shown on the machine monitor. The engine power is derated step by step.

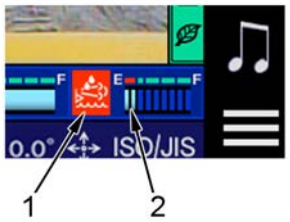

G0209414

In the action levels “L03 (Mild Inducement)” and “L04 (Severe Inducement and Final Inducement)”, the engine power is derated. If the action level “L03” or “L04” is shown, stop the operation, move the machine to a safe area, and add DEF.

If the operation is continued further with no addition of DEF at “Severe Inducement” level, the engine speed will be fixed at low idle. (Level of “Final Inducement”)

You can see the content of the warning on “SCR Information” screen of the User menu.

Tap “Menu Icon” to show “SCR Information” screen of the User Menu.

The display automatically changes to “SCR Information” screen also when the lock lever is set to the LOCK position or the travel levers and control levers stay in NEUTRAL for 3 seconds or more.

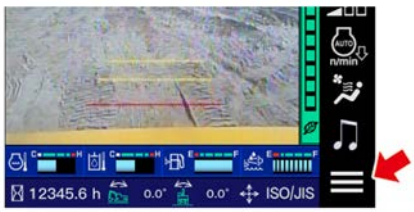

G0209111

“SCR Information” screen shows the DEF level caution lamp (1), DEF level gauge (2), information on the urea SCR system (3), and the current state of Inducement (4).

If Inducement starts, stop the operation, stop the machine in a safe area, and add DEF.

If DEF is not added, the buzzer sound cannot be canceled even if you push the mute switch.

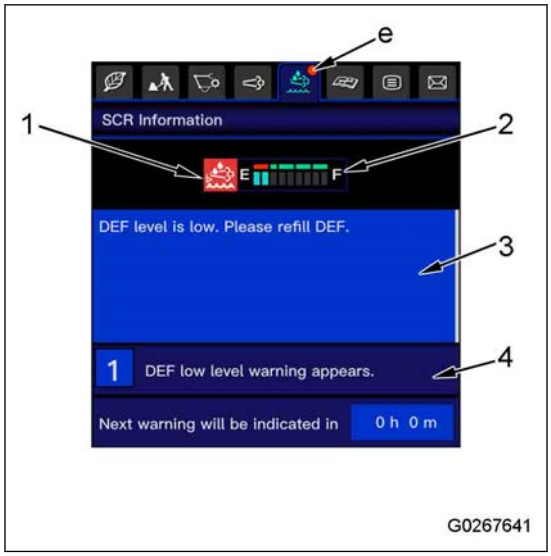

- Warning:
  2 segments in the red range of the DEF level gauge (2) come on.
  The DEF level caution lamp (1) comes on in red.
  The alarm buzzer does not operate.
  No action level is shown.
  Tap “Menu Icon” to show “SCR Information” menu (e).

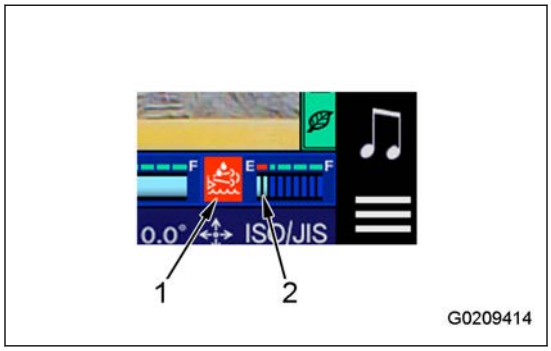

  Screen message on “SCR Information” (4): “1 DEF low level warning appears.”

  Add DEF immediately.

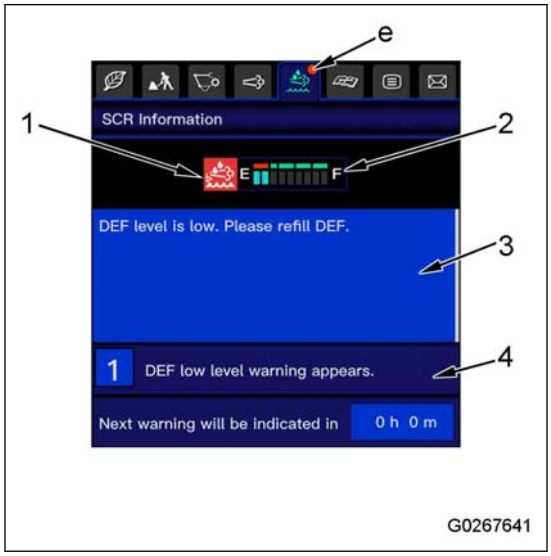

- Escalated Warning:
  The alarm buzzer operates in Triple-beep alarm.
  2 segments in the red range of the DEF level gauge (2) come on.
  The DEF level caution lamp (1) comes on in red.
  No action level is shown.
  Tap “Menu Icon” to show “SCR Information” menu (e).

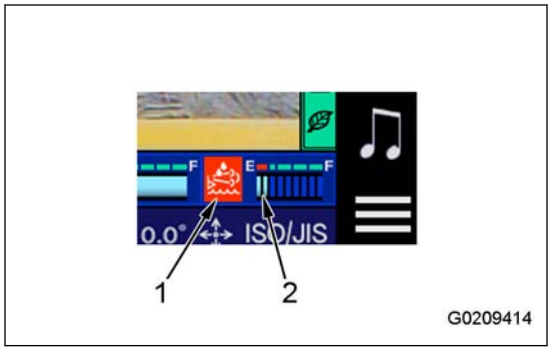

Screen message on “SCR Information” (4): “2 Without treatment, engine power will be derated.”

Add DEF immediately.

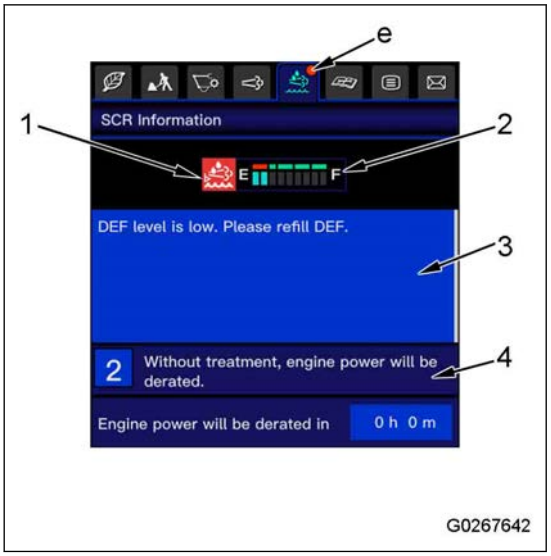

- Mild Inducement:
  The alarm buzzer operates intermittently.
  1 segment of the DEF level gauge (2) comes on in the red range.
  The DEF level caution lamp (1) comes on in red.
  The action level “L03” (5) is shown in red.
  Tap “Menu Icon” to show “SCR Information” menu (e).

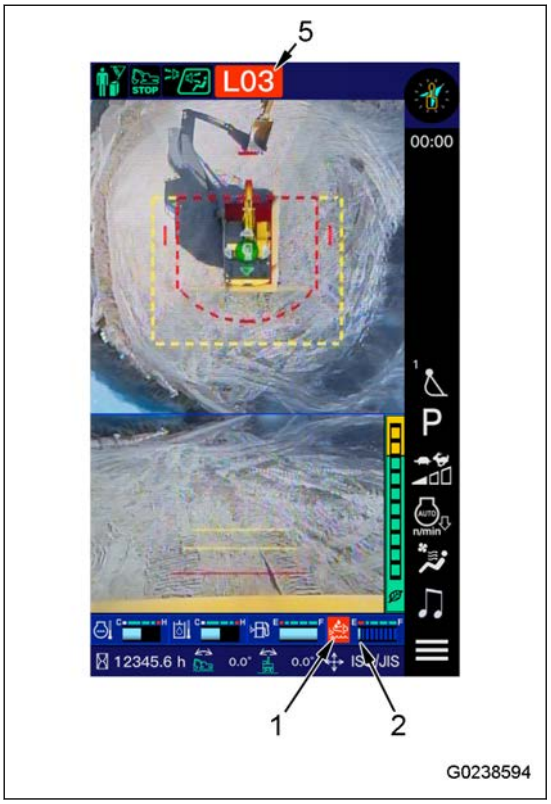

Screen message on “SCR Information” (4): “3 Engine power is under deration.”

Add DEF immediately.

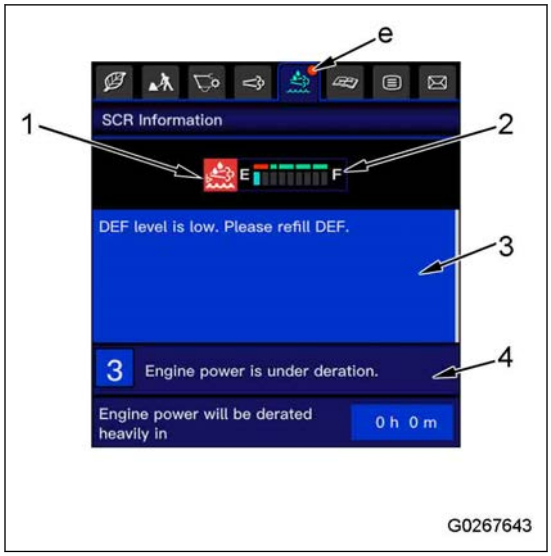

- Severe Inducement:
  The alarm buzzer operates continuously.
  The DEF level gauge (2) does not come on.
  The DEF level caution lamp (1) comes on in red.
  The action level “L04” (5) is shown in red.
  Tap “Menu Icon” to show “SCR Information” menu (e).
  When all segments of the DEF level gauge are off, the DEF refilling quantity is 41 ℓ {10.8 US gal}.

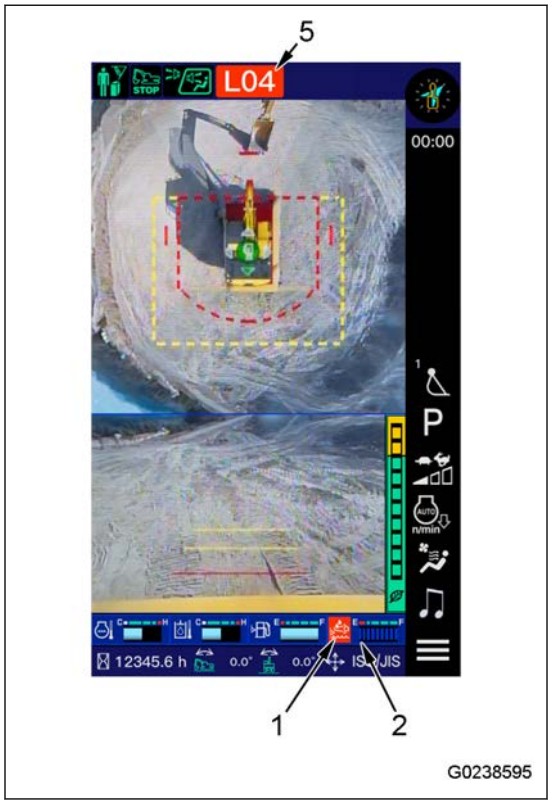

Screen message on “SCR Information” (4): “4 Engine power is under heavy deration.”

Because of the more deration of the engine output, the machine operation will be limited more.
Add DEF immediately.
The remaining time (hours and minutes) to “Final Inducement” level is shown in field (6) of “SCR Information” screen.
If DEF is not added during “Severe Inducement”, Inducement changes to “Final Inducement” in 1 hour. In “Final Inducement”, the engine speed is fixed at low idle.

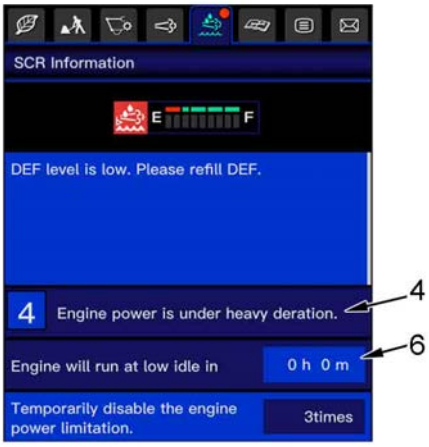

G0267644

Engine power can be restored temporarily from power derate. If Inducement changes to “Severe Inducement” and it becomes necessary to restore the engine power, restore the engine power temporarily to move the machine to a safe area, and add DEF. The engine power can be restored to “Mild Inducement” level by a machine monitor operation only at the “Severe Inducement” level. For the engine power restoration procedure, see “Temporary Restoration from Inducement”.

- Final Inducement:
  After 1 hour, the level changes from “Severe Inducement” to “Final Inducement”.
  The alarm buzzer operates continuously.
  The DEF level gauge (2) does not come on.
  The DEF level caution lamp (1) comes on in red.
  The action level “L04” (5) is shown in red.
  Tap “Menu Icon” to show “SCR Information” menu (e).

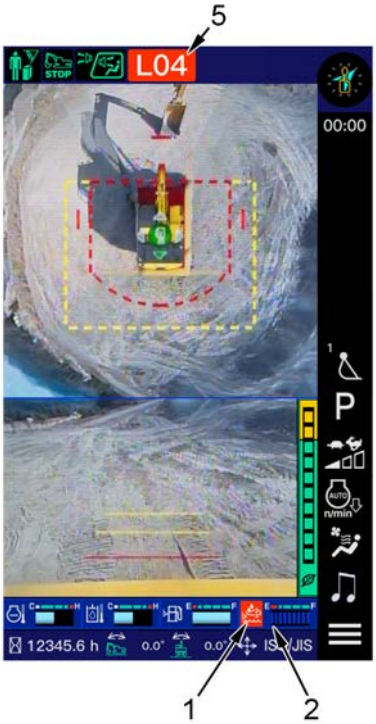

G0238595

Screen message on “SCR Information” (4): “5 Engine is running at low idle.”

The engine speed is fixed at low idle, and the operation cannot be done.
Add DEF immediately.
If the system is not recovered after it is added, consult your Komatsu distributor.

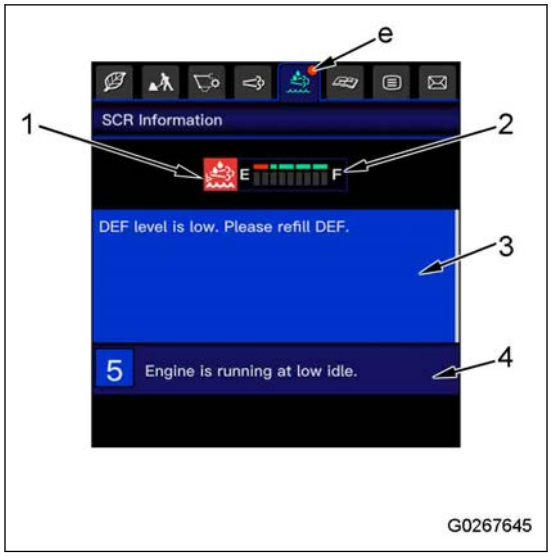

What to Do if DEF Injection Error (Other than KDPF System Error) or DEF Quality Problem Occurs

If a problem is sensed in the DEF injection or DEF quality, Inducement strategy starts.

The warning level changes in 5 steps: “Warning”, “Escalated Warning”, “Mild Inducement”, “Severe Inducement”, and “Final Inducement”. As Inducement changes, the DEF system caution lamp is shown on the machine monitor (1), the action level (2) is shown, the alarm buzzer operates, the engine output is derated, and the engine speed is fixed at low idle. Inducement starts with the action level “L03 (Mild Inducement)”, and changes to “L04 (Severe Inducement and Final Inducement)”. When the system goes to “Final Inducement”, the engine speed is fixed at low idle. If “L03” is shown, stop the operation, move the machine to a safe area, and consult your Komatsu distributor for inspection and maintenance.

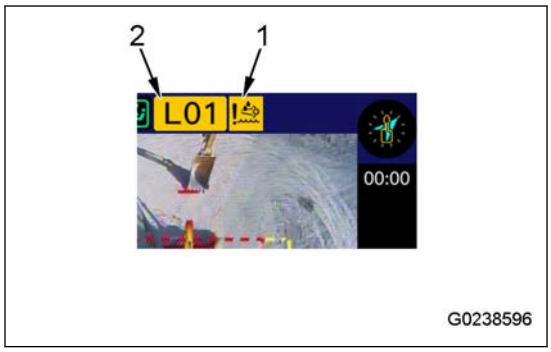

You can see the content of the warning on “SCR Information” screen of the User menu.

Do the operations that follow.

Tap “Menu Icon” to show “SCR Information” menu (e).

The display automatically changes to “SCR Information” screen also when the lock lever is set to the LOCK position or the travel levers and control levers stay in NEUTRAL for 3 seconds or more.

While the caution is shown in the urea SCR system, “SCR Information” screen of the User menu is automatically shown on the pop-up display.

The remaining time (hours and minutes) to the next Inducement (5), state of the urea SCR system (3), and current state of Inducement (4) are shown in each field of “SCR Information” screen.

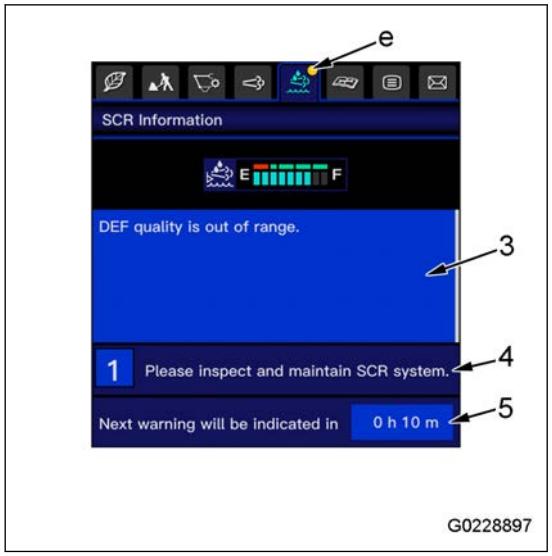

- Warning:
  The alarm buzzer does not operate.
  The DEF system caution lamp (1) comes on in yellow.
  Action level “L01” comes on in yellow on the machine monitor (2) for 2 seconds and goes off.
  Tap “Menu Icon” to show “SCR Information” menu (e).

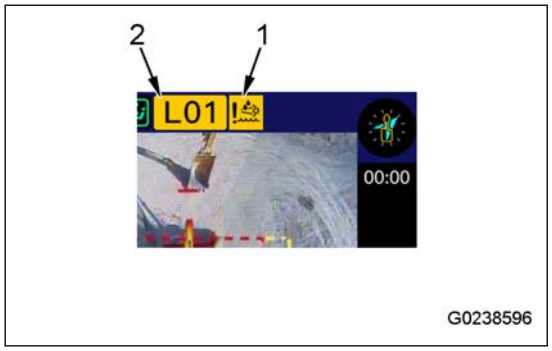

  Screen message (4) on “SCR Information”: “1 Please inspect and maintain SCR system.”

  Move the machine to a safe area, and consult your Komatsu distributor.
  Unless all abnormalities are repaired after the start of the “Warning” level, Inducement changes to the “Escalated Warning” level after 5 hours.

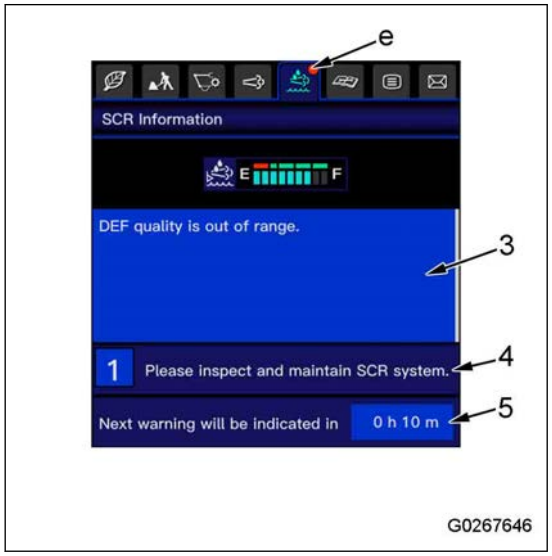

- Escalated Warning:
  The alarm buzzer operates in Triple-beep alarm.
  The DEF system caution lamp (1) comes on in yellow.
  Tap “Menu Icon” to show “SCR Information” menu (e).

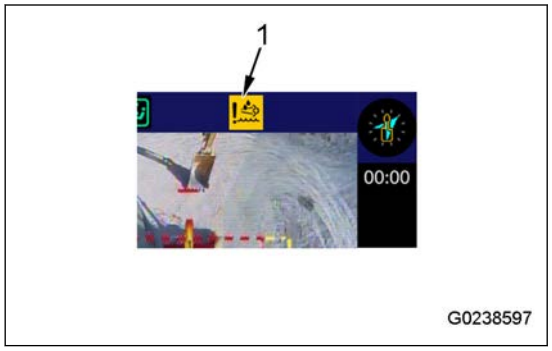

Screen message on “SCR Information” (4): “2 Without treatment, engine power will be derated.”

Stop the operation, move the machine to a safe area, and consult your Komatsu distributor for inspection and maintenance.
The “Escalated Warning” level continues for 5 hours. The remaining time (hours and minutes) to “Mild Inducement” level is shown in field (5) of “SCR Information” screen.
In “Mild Inducement”, the engine power is derated.

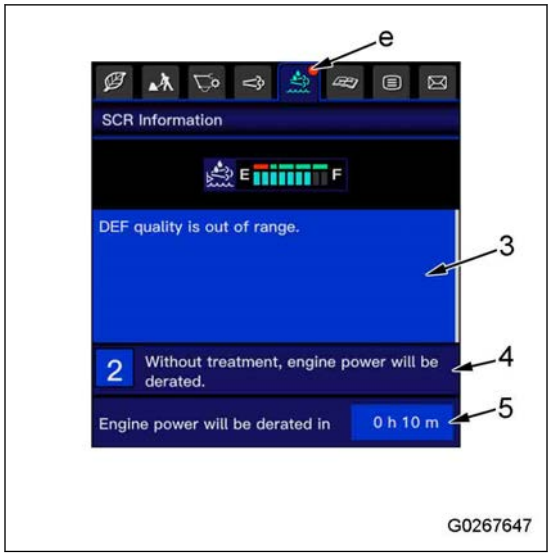

- Mild Inducement:
  The alarm buzzer operates intermittently.
  The DEF system caution lamp (1) comes on in red.
  Action level “L03” (2) is shown in red, and the state is kept.
  Tap “Menu Icon” to show “SCR Information” menu (e).

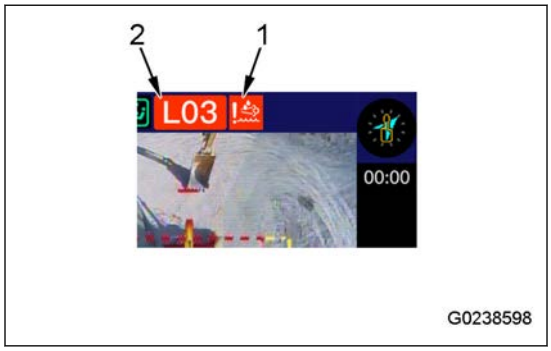

Screen message on “SCR Information” (4): “3 Engine power is under deration.”

The machine operation will be limited by Inducement.
Stop the operation, move the machine to a safe area, and consult your Komatsu distributor for inspection and maintenance.
“Mild Inducement” continues for 10 hours. The remaining time (hours and minutes) to “Severe Inducement” level is shown in field (5) of “SCR Information” screen.
In “Severe Inducement”, the engine power is derated more.

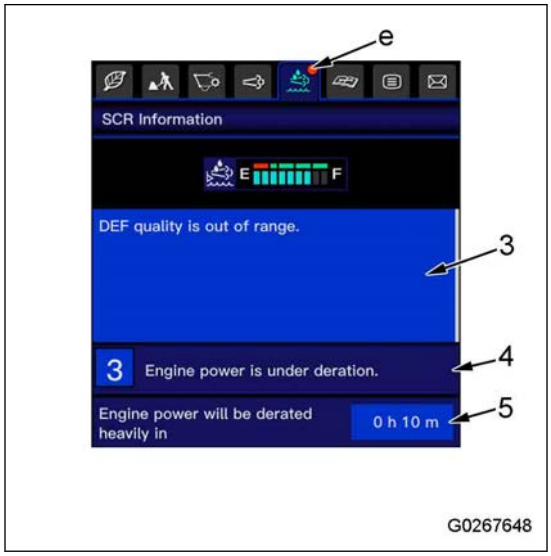

- Severe Inducement:
  The alarm buzzer operates continuously.
  The DEF system caution lamp (1) comes on in red.
  The action level “L04” (2) is shown in red.
  Tap “Menu Icon” to show “SCR Information” menu (e).

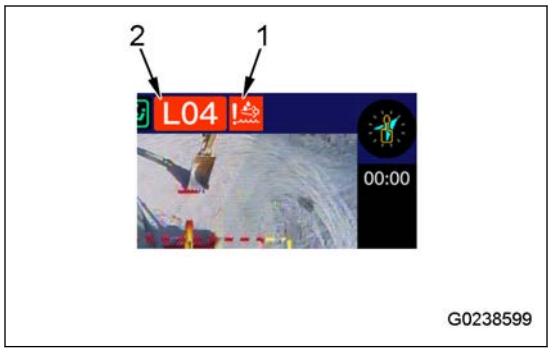

Screen message on “SCR Information” (4): “4 Engine power is under heavy deration.”

Because of the more deration of the engine output, the machine operation will be limited more.
Stop the operation, move the machine to a safe area, and consult your Komatsu distributor for inspection and maintenance.
“Severe Inducement” continues for 5 hours. The remaining time (hours and minutes) to “Final Inducement” level is shown in field (5) of “SCR Information” screen.
In “Final Inducement”, the engine speed is fixed at low idle.

G0267649

Engine power can be restored temporarily from power derate. If Inducement changes to “Severe Inducement” and it becomes necessary to restore the engine power, restore the engine power temporarily to move the machine to a safe area, and consult your Komatsu distributor for inspection and maintenance. The engine power can be restored to the “Mild Inducement” level by a machine monitor operation only at the “Severe Inducement” level. For the engine power restoration procedure, see “Temporary Restoration from Inducement”.

- Final Inducement:
  The alarm buzzer operates continuously.
  The DEF system caution lamp (1) comes on in red.
  Action level “L04” (2) is shown in red, and the state is kept.
  Tap “Menu Icon” to show “SCR Information” menu (e).

G0238599

Screen message on “SCR Information” (4): “5 Engine is running at low idle.”

The engine speed is fixed at low idle, and the operation cannot be done.
Stop the operation, move the machine to a safe area, and consult your Komatsu distributor for inspection and maintenance.

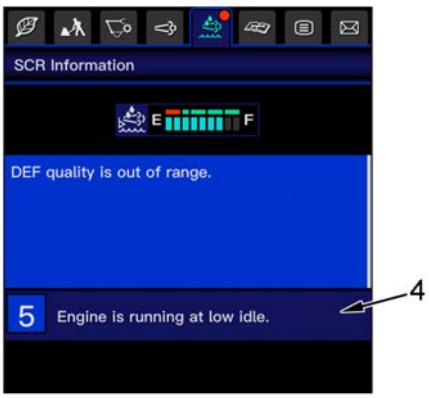

G0228902

What to Do if DEF Injection Error (Other than KDPF System Error) Occurs

If a problem is found in the DEF injection, the system gives warnings about the abnormality to the operator with the DEF system caution lamp and alarm buzzer.

The warning level changes in 5 levels, “Warning”, “Escalated Warning”, “Mild inducement”, “Severe Inducement”, and “Final Inducement”. As Inducement changes, the KDPF system caution lamp (1), DEF system caution lamp (2), and action level (3) are shown, the alarm buzzer operates, the engine output is derated, and the engine speed is fixed at low idle. Inducement starts with the action level “L03 (Mild Inducement)”, and changes to “L04 (Severe Inducement and Final Inducement)”. When the system goes to “Final Inducement”, the engine speed is fixed at low idle. If “L03” is shown, stop the operation, move the machine to a safe area, and consult your Komatsu distributor for inspection and maintenance.

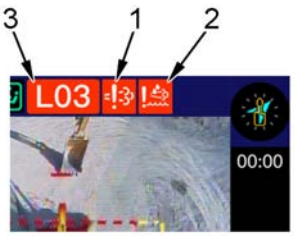

G0238600

You can see the content of the warning on “SCR Information” screen of the user menu.

Do the operations that follow.

Tap “Menu Icon” to show “SCR Information” menu (e).

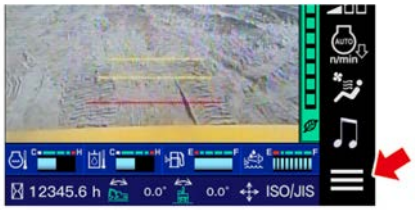

G0209111

The display automatically changes to “SCR Information” screen also when the lock lever is set to the LOCK position or the travel levers and control levers stay in NEUTRAL for 3 seconds or more.

The remaining time (hours and minutes) to the next Inducement (6), state of the urea SCR system (4), and current state of Inducement (5) are shown in each field of the “SCR Information” screen.

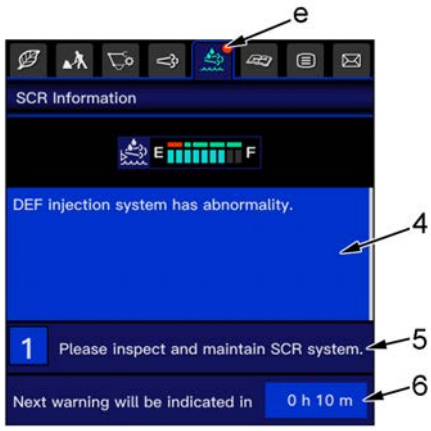

G0228903

- Warning:
  The alarm buzzer operates intermittently.
  The KDPF system caution lamp (1) comes on in red.
  The action level “L03” (3) comes on in red.
  Tap “Menu Icon” to show “SCR Information” menu (e).

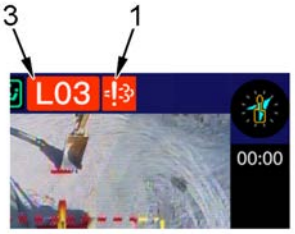

G0238601

Screen message on “SCR Information” (5): “1 Please inspect and maintain SCR system.”

Stop the operation, move the machine to a safe area, and consult your Komatsu distributor for inspection and maintenance.
Unless all abnormalities are repaired after the start of the “Warning” level, Inducement changes to the “Escalated Warning” level after 5 hours.

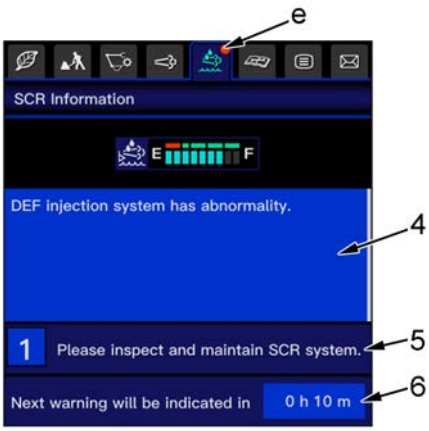

G0228903

- Escalated Warning:
  The alarm buzzer operates in Triple-beep alarm.
  The KDPF system caution lamp (1) comes on in red.
  The DEF system caution lamp (2) comes on in yellow.
  The action level “L03” (3) comes on in red.
  Tap “Menu Icon” to show “SCR Information” menu (e).

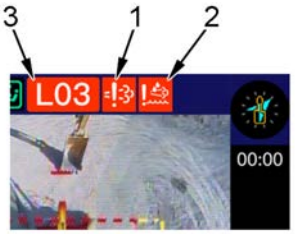

G0238600

Screen message on “SCR Information” (5): “2 Without treatment, engine power will be derated.”

Stop the operation, move the machine to a safe area, and consult your Komatsu distributor for inspection and maintenance.
The “Escalated Warning” level continues for 5 hours. The remaining time (hours and minutes) to “Mild Inducement” level is shown in field (6) of “SCR Information” screen.
In the “Mild Inducement” level, the engine power is derated.

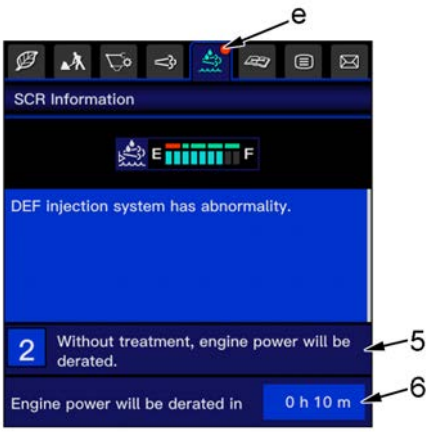

G0228904

- Mild Inducement:
  The alarm buzzer operates intermittently.
  The KDPF system caution lamp (1) comes on in red.
  The DEF system caution lamp (2) comes on in red.
  The action level “L03” (3) comes on in red.
  Tap “Menu Icon” to show “SCR Information” menu (e).

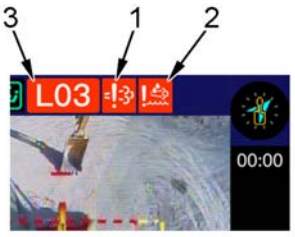

G0238600

Screen message on “SCR Information” (5): “3 Engine power is under deration.”

The machine operation will be limited by Inducement.
“Mild Inducement” continues for 10 hours. The remaining time (hours and minutes) to “Severe Inducement” level is shown in field (6) of “SCR Information” screen.
In “Severe Inducement”, the engine power is derated more.
Stop the operation, move the machine to a safe area, and consult your Komatsu distributor for inspection and maintenance.

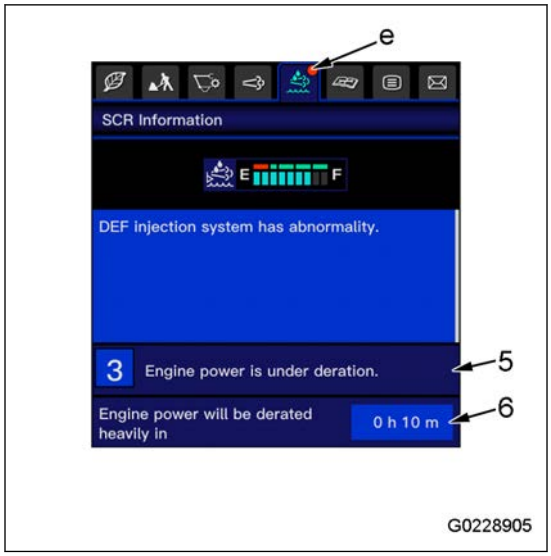

- Severe Inducement:
  The alarm buzzer operates continuously.
  The KDPF system caution lamp (1) comes on in red.
  The DEF system caution lamp (2) comes on in red.
  The action level “L04” (3) is shown in red.
  Tap “Menu Icon” to show “SCR Information” menu (e).

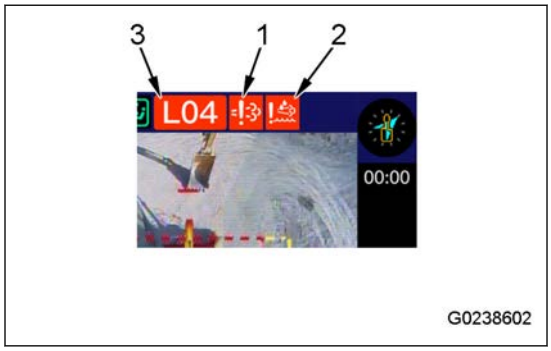

Screen message on “SCR Information” (5): “4 Engine power is under heavy deration.”

Because of the more deration of the engine output, the machine operation will be limited more.
Stop the operation, move the machine to a safe area, and consult your Komatsu distributor for inspection and maintenance.
“Severe Inducement” continues for 5 hours. The remaining time (hours and minutes) to “Final Inducement” level is shown in field (6) of “SCR Information” screen.
In “Final Inducement”, the engine speed is fixed at low idle.

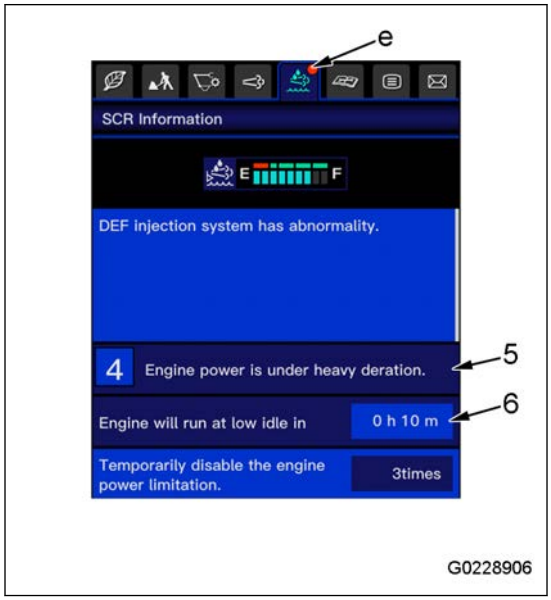

Engine power can be restored temporarily from power derate. If Inducement changes to “Severe Inducement” and it becomes necessary to restore the engine power, restore the engine power temporarily to move the machine to a safe area, and consult your Komatsu distributor for inspection and maintenance. The engine power can be restored to the “Mild Inducement” level by a machine monitor operation only at the “Severe Inducement” level. For the engine power restoration procedure, see “Temporary Restoration from Inducement”.

- Final Inducement:
  The alarm buzzer operates continuously.
  The KDPF system caution lamp (1) comes on in red.
  The DEF system caution lamp (2) comes on in red.
  The action level “L04” (3) is shown in red.
  Tap “Menu Icon” to show “SCR Information” menu (e).

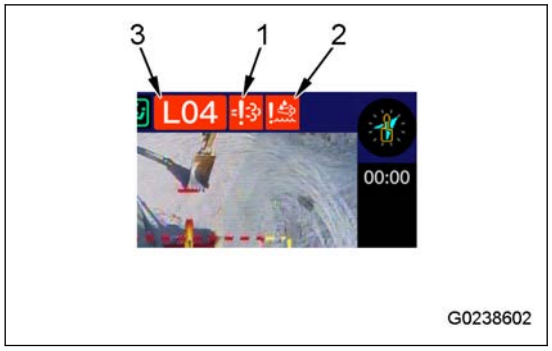

Screen message on “SCR Information” (5): “5 Engine is running at low idle.”

The engine speed is fixed at low idle, and the operation cannot be done.
Stop the operation, move the machine to a safe area, and consult your Komatsu distributor for inspection and maintenance.

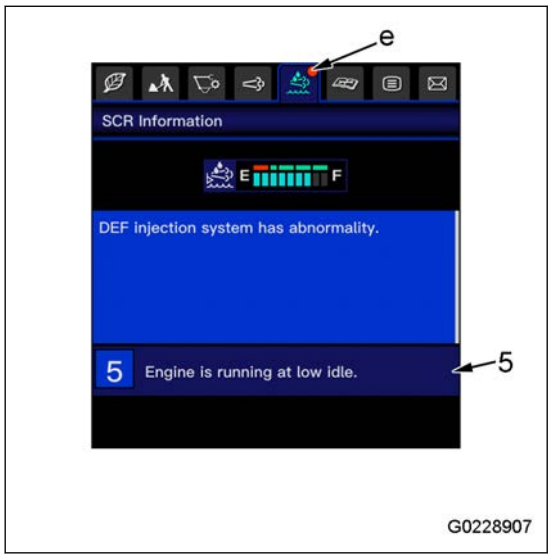

Temporary Restoration from Inducement

The Temporary Restoration from Inducement of engine power limitation is one of the functions available in the urea SCR system.

In case the urea SCR system goes to “Severe Inducement”, the engine power is derated heavily. In such case, the machine cannot be moved easily to a safe area for refill of DEF or inspection and repair of the urea SCR system. For temporary remedies from this problem, the engine power can be restored for a short time to “Mild Inducement” on the machine monitor. “Temporary Restoration from Inducement” does not restore the engine output fully.

“Temporary Restoration from Inducement” can be used when the urea SCR system is in “Severe Inducement”. Temporary Restoration from Inducement can be used up to 30 minutes and 1 time. After the level changes to “Severe Inducement”, it can be used up to 5 hours and 3 times. This function changes Inducement to the “Final Inducement” level if it is used for 30 minutes or 3 times, and it cannot be used after that.

To restore the DEF injection problem and DEF quality problem, the system must be repaired.

If all failures are not repaired in the “Severe Inducement” level, the system goes to the “Final Inducement” level after 5 hours from the start of the “Severe Inducement” level. The engine speed is fixed at low idle. Machine operation will actually not be possible. If the system changes to “Severe Inducement”, use Temporary Restoration from Inducement immediately.

Procedure to activate “Temporary Restoration from Inducement”

1. When the urea SCR system is in the state of “Severe Inducement” level, and the standard screen is shown on the machine monitor, tap “Menu Icon” to show “SCR Information” menu item (e).

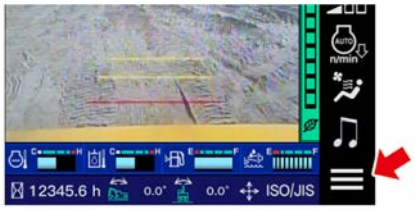

G0209111

2. Tap “Temporarily disable the engine power limitation.”.

   If “Temporarily disable the engine power limitation.” is not pushed in 30 seconds, the “Standard Screen” is shown. Tap “Menu Icon” again to show “SCR Information” menu (e).
   The remaining number of operations of Temporary Restoration from Inducement is shown in field (1) of “SCR Information” screen.

G0228908

3. See the confirmation message. Tap the checkmark button.

   Temporary Restoration from Inducement is activated. Engine power restriction goes back to “Mild Inducement”. The engine power is restored for 30 minutes (sufficient time to move the machine) until the level changes to “Final Inducement”.
   Be careful that the Temporary Restoration from Inducement is canceled in “Final Inducement”.

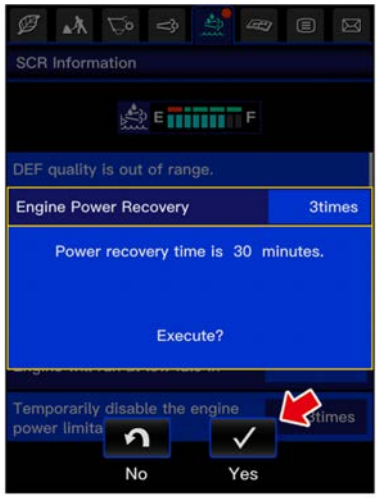

G0228909

The remaining time (minutes and seconds) until the Temporary Restoration from Inducement expires is shown in field (2) of “SCR Information” screen.

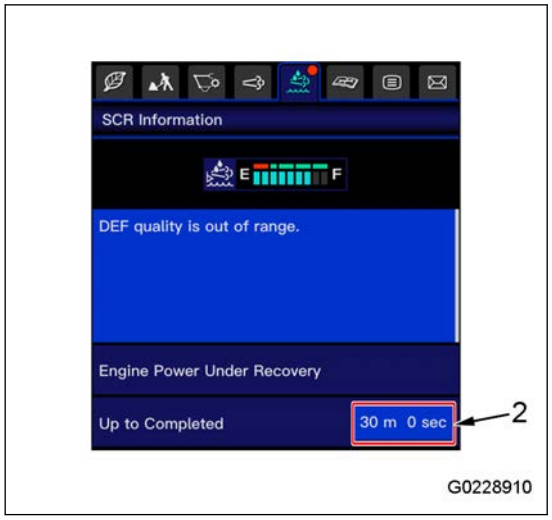

To disable “Temporary Restoration from Inducement” from the “Engine Power Recovery” screen, do the operation that follows.

Procedure to cancel “Temporary Restoration from Inducement”

1. Tap the RETURN button while “Engine Power Recovery” screen is shown.

   Do this step as an alternative to step 3 of the procedure to activate “Temporary Restoration from Inducement”.

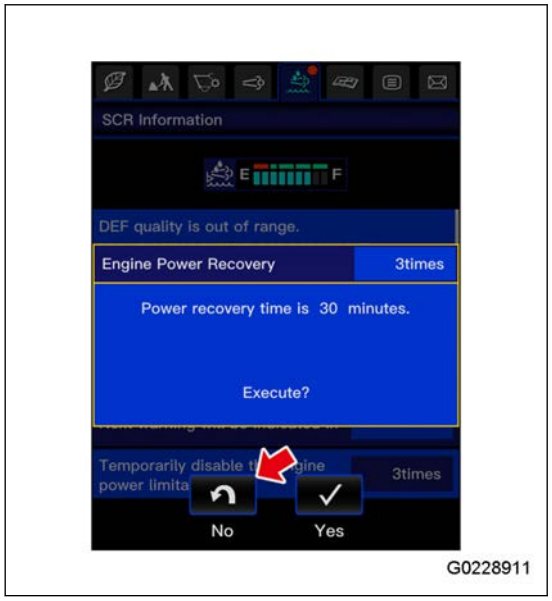

2. “SCR Information” screen is shown.

   “Temporary Restoration from Inducement” will be stopped.

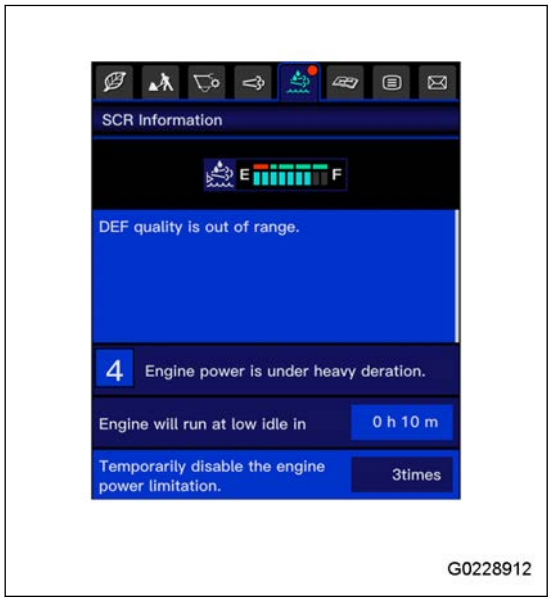

DEF Filter

The DEF filter is a filter element to clean the DEF sucked from the DEF tank by the DEF pump, and to supply it to the DEF injector.

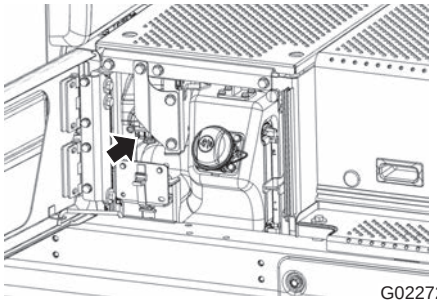

NOTICE

- **The DEF filter must be replaced every 2000 hours.**
- **If the machine is operated without the DEF filter, or with the filter other than Komatsu genuine parts, foreign materials go into the DEF pump and DEF injector in some cases, which will cause failure of the machine. Do not operate the machine without the DEF filter. Do not use the filter other than Komatsu genuine parts.**
- **The DEF filter cannot be cleaned. If you clean or regenerate the filter, it will degrade the performance of the DEF filter and will contaminate the DEF pump and the DEF injector, and it will cause failure of the machine. Do not use the DEF filter again.**

KOMTRAX

⚠ WARNING

- **Never disassemble, repair, modify, or move the wireless communication terminal, antenna, or cables. This may cause failure or fire on the wireless equipment or the machine itself.**
- **Near the blasting jobsite, there may be a danger of unexpected explosion due to use of the wireless equipment and resulting serious personal injury or death.**
  If you have to operate the machine within 12 m {39 ft 4 in} from the remote-controlled blasting device, the power supply cable of the wireless communication device must be disconnected in advance.

KOMTRAX is a vehicle management system that remotely manages the machines equipped with the KOMTRAX device by using satellite communication or portable radio communication.

The GPS (Global Positioning System), receiver, and communication system are equipped in the vehicle management system.

The machine information such as the machine maintenance, maintenance management, operating situation management, and machine location management is gathered from the inside network of the machine. It can be useful for you to perform the machine management by yourself. Your Komatsu distributor uses the above machine information for supply of service to the customers, improvement of our products and service, etc.

The type of information which is sent from the machine may vary depending on the machine. For the radio station establishment of KOMTRAX, consult your Komatsu distributor.

Power Supply for KOMTRAX

- Even when the starting switch is in the OFF position, the KOMTRAX system consumes small electric power.
  It is recommended to start the engine regularly to charge the battery.
- To use the battery disconnect switch, make sure that the system operating lamp is not lit after you turn the starting switch to the OFF position. Then, turn the battery disconnect switch key to the OFF position and remove the key.
  When the battery disconnect switch is turned to the OFF position, it can prevent the consumption of the battery power, but the functions of KOMTRAX stop at the same time.
- If it is necessary to disconnect the power supply cable of the KOMTRAX system device, consult your Komatsu distributor.

Machine Operations and Controls

Checks and Adjustment Before You Start Engine

Walk-Around Check

Before you start the engine, walk around the machine and look at the bottom of the machine to examine for loose bolts and nuts, leakage of fuel, oil, and coolant. Also, examine the condition of the work equipment and hydraulic system.

Examine for loose electric wiring, play, and dirt in parts that become very hot.

⚠ WARNING

Flammable materials accumulated around the exhaust pipe, aftertreatment devices, turbocharger, or other high-temperature engine parts or battery, and leakage of fuel or oil will cause the machine to catch fire.
Examine it fully, and if a problem is found, repair it or consult your Komatsu distributor.

Do the inspections and cleaning as follows before you start the engine for the day's work.

1. Examine the work equipment, cylinders, linkages, and hoses for damage, wear, and clearance.

   Examine the work equipment, cylinders, linkage and hoses for cracks, excessive wear, and abnormal clearance. If a problem is found, repair it.

2. Remove dirt around the engine, battery, and radiator.

   Examine for dirt accumulated around the engine and radiator. Also, examine for flammable materials (dry leaves, twigs, or such) around high-temperature engine parts such as the exhaust pipe, aftertreatment devices, or turbocharger, or battery. If dirt or flammable materials are found, remove them.

3. Examine the area around the engine for coolant or oil leakage.

   Examine the engine for oil leakage, and examine the cooling system for coolant leakage. If a problem is found, repair it.

4. Examine the fuel line for leakage.

   Examine for leakage of fuel or damage to the hoses and tubes. If a problem is found, repair it.

5. Remove dirt from the DEF line. Make sure that there is no leakage.

   Examine for dirt accumulated around the DEF tank, and clean the blue DEF tank filler cap and around it. Examine the DEF® tank, pump, injector, and hoses and their connections for leakage. If a problem is found, consult your Komatsu distributor for repair.

6. Examine the hydraulic component, hydraulic tank, hoses, and joints for oil leakage.

   Examine for oil leakage. If a problem is found, repair the part where there is oil leakage.

7. Examine the undercarriage (track, sprocket, idler, guard) for abnormality, wear, loose bolts, or oil leakage from rollers.

   If a problem is found, repair it.

8. Examine the handrails and steps for abnormality and bolts for looseness.

   If a problem is found, repair it. Tighten the loose bolts again.

9. Examine the gauges and monitor for problem.

   Examine the gauges and monitor in the operator cab for abnormalities. If a problem is found, replace the part. Clean off dirt on the surface.

NOTICE

Clean the touch panel of the monitor frequently. Use it in a clean condition.
When you clean water drop or dirt on the monitor surface, clean it carefully with a clean, soft, and dry cloth with stroke movements. To remove stains that are not easy to remove, such as oil, wipe them with a soft, wet, tight-wrung cloth or a soft cloth dampened with some alcohol.

- **Do not rub hard when dirt is attached. It can cause scratches.**
- **Do not use acidic or alkaline detergents or solvents. It can cause surface deterioration.**

10. Examine and clean all the mirrors.

    Make sure that there is no damage on all the mirrors. If damage is found, repair it. Clean the surfaces of the mirrors, and adjust the angle. For details, see “How to Adjust Mirrors (3-222)”.

11. Examine the seat belt and mounting hardware.

    Examine the seat belt and mounting hardware for abnormalities. If damage is found, consult your Komatsu distributor to replace it with a new one.

12. Examine and clean the camera.

    When you clean the camera, wipe off dirt with soft cloth.

    If you stand on an unbalanced footing or you are in an unbalanced attitude when you clean the camera, you can fall and have injury. Put a stepladder or step on a level and hard ground, and clean the camera in a stable balance.

    Examine the camera for abnormalities. If a fault is found, consult your Komatsu distributor for repair.

13. Remove dirt from around the aftertreatment devices.

    Examine for dirt and flammable materials (dry leaves, twigs, or such) accumulated around the aftertreatment devices. If dirt or flammable materials are found, remove them.

14. Examine around the aftertreatment devices for exhaust gas leakage.

    Examine the pipe that connects the turbocharger to the aftertreatment devices and also the KDPF connections for leakage of exhaust gas (and deposition of soot). If a problem is found, consult your Komatsu distributor for repair.

15. Examine the radar of the object avoidance.

    The radar is installed in 4 places: at the rear left, front right, rear right, and rear of the machine.

⚠ CAUTION

- **If dirt or other foreign material is attached on the surface of the radar cover, the radar cannot operate correctly, and the detection cannot be done correctly. If foreign material is attached to the machine, clean it immediately in addition to the daily inspection.**
- **Do not do the operations that follow. The radar cannot operate correctly, and the detection cannot be done correctly.**
  - **Paint the radar cover.**
  - **Attach a sticker or other foreign material on the radar cover.**

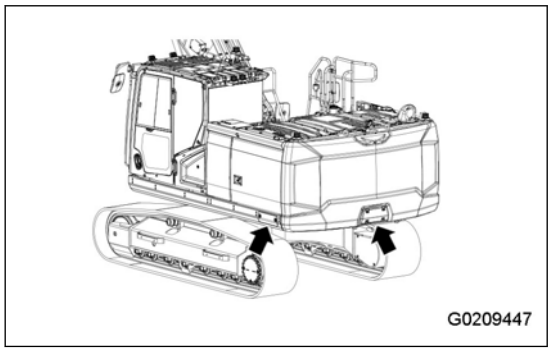

    1) Make sure that there are no foreign materials on the surface of the radar cover.
    2) If foreign material is attached to the surface of the radar cover, wipe it with a cloth dampened with water to remove it.

16. Examine the indicator of the Komatsu maintenance-free battery.

    For details, see “How to Examine Battery and Indicator of Komatsu Maintenance-Free Battery (4-69)”.

How to Examine Before You Start Operation

Always check the items in this section before starting the engine each day.

How to Drain Water and Sediment from Fuel Tank

1. Open the cover at the right of the machine.
2. Put a container to receive drained fuel below the drain hose (1).
3. Set the drain valve (2) to the OPEN position (O) to drain all the sediment and water collected at the bottom together with fuel.
4. When only clean fuel flows out, set the drain valve (2) to the CLOSE position (S).
5. Close the cover.

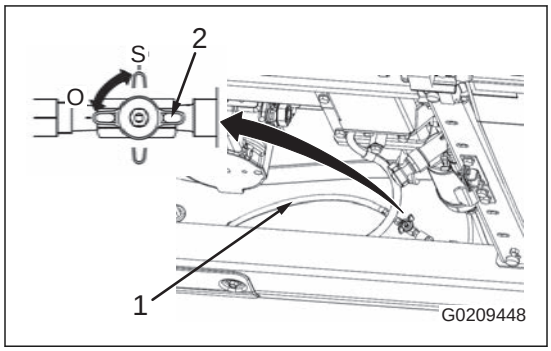

How to Examine Water Separator, Drain Water and Sediment

1. Open the cover at the right of the machine.
2. Make sure that water and sediment are not accumulated.

   Look through the transparent cup (2) to judge the water level and sediment.

   NOTICE

   If water in the transparent cup (2) freezes, wait until the frozen water is melted fully, and obey the procedure to drain water.

3. Put a container below the drain hose (3) to receive water.
4. Loosen the drain valve (4) to drain water.
5. Immediately after fuel is drained from the drain hose (3), tighten the drain valve (4) to stop it.

   Tightening torque: 2.5 to 3.4 Nm {0.25 to 0.35 kgfm, 1.81 to 2.53 lbft}

   On this machine, a sensor is installed to sense if water accumulates in the transparent cup (2).

   When the water separator caution lamp (5) comes on in red on the machine monitor, it shows that water is accumulated in the transparent cup (2).

   In this case, use the procedure above to drain water.

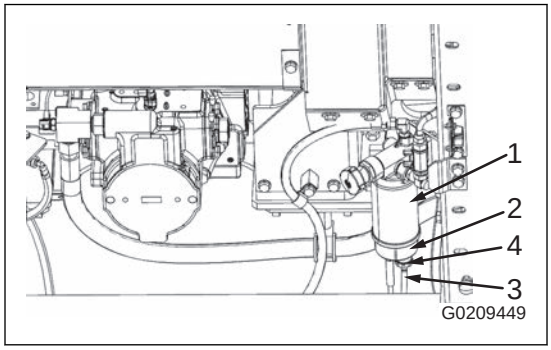

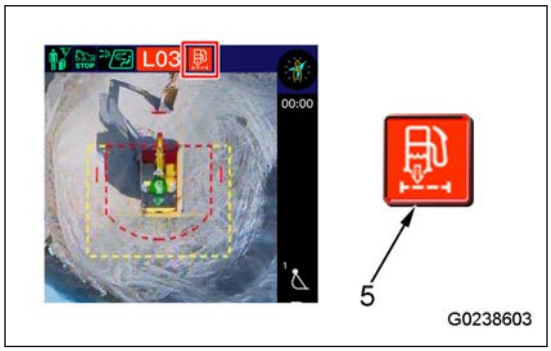

REMARK

When only the water separator caution lamp comes on, it comes on at the position shown in the figure. If other caution lamps come on at the same time, the water separator caution lamp comes on at a different position.

NOTICE

If water in the transparent cup (2) freezes, the water separator caution lamp does not come on in some cases. After the engine starts, when the temperature around fuel prefilter (1) increases and the frozen water melts, the water separator caution lamp can suddenly come on. In the cold season, even if the water separator caution lamp is not on, drain water frequently.

How to Adjust Drain Valve of Water Separator

If the drain valve (4) does not move easily, apply grease to the O-ring of the drain valve, and it will move smoothly.

1. Set the valve (6) above the fuel prefilter to the SHUT position (S).

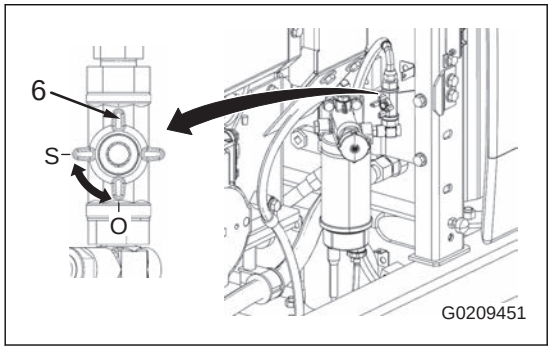

2. Put a container to receive fuel below the fuel prefilter cartridge.

   REMARK

   You can also cut fuel with the valve (6) at the bottom of the fuel tank.

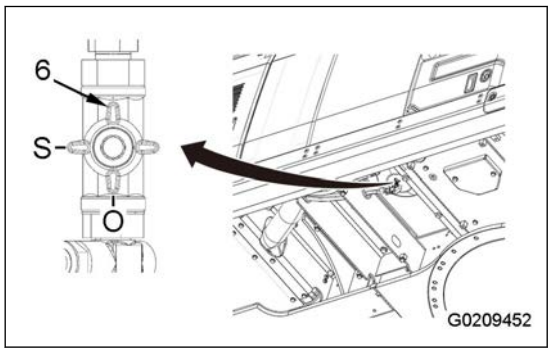

3. Loosen the drain valve (4), and drain water and sediment from the transparent cup (2), and also drain all the fuel accumulated in the fuel prefilter cartridge (1).
4. Make sure that nothing comes out from the drain hose (3), and remove the drain valve (4).

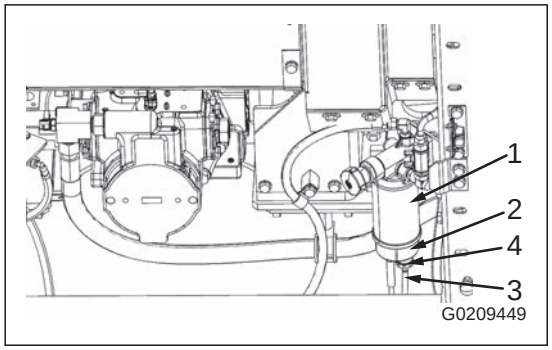

5. Apply correct quantity of grease to the O-ring (7).

   REMARK

   When you apply grease, be careful not to let grease attach to the drain port (8) of the drain valve and the threaded part (9) of the drain valve.
6. Tighten the drain valve (4) by hand until it touches the transparent cup (2).
7. Remove the fuel container.
8. Set the valve (6) above the fuel prefilter to the OPEN position (O).
9. Bleed air from the fuel.

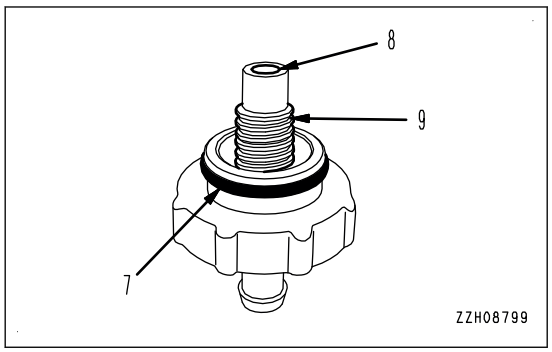

How to Examine Oil Level in Hydraulic Tank, Add Oil

WARNING

- **Immediately after the engine stops, the parts and oil are very hot, and they can cause burn injury. Wait for the temperature to go down, and then start the work.**
- **When you remove the oil filler port cap, there is a possibility that oil spurts out. Slowly turn the oil filler port cap to release the internal pressure, and then remove it carefully.**

1. Set the machine in the posture shown in the figure.

   If the work equipment is not set as shown in the figure, set it in the posture as follows.

   1) Start the engine, and run it at low speed.

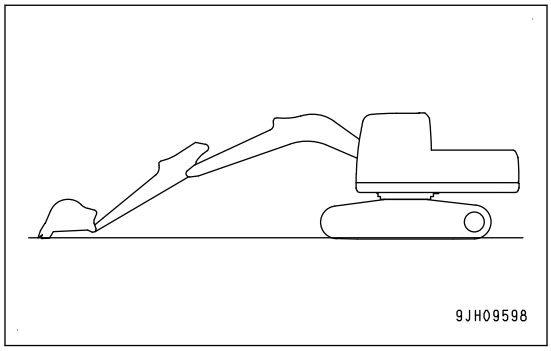

   2) Operate the operating part (g) of the lock lever to set it to the FREE position (F).
   3) Retract the cylinder rods for the arm and bucket fully.
   4) Lower the boom and lower the bucket tooth to the ground.
   5) Turn the starting switch to the OFF position, and stop the engine.

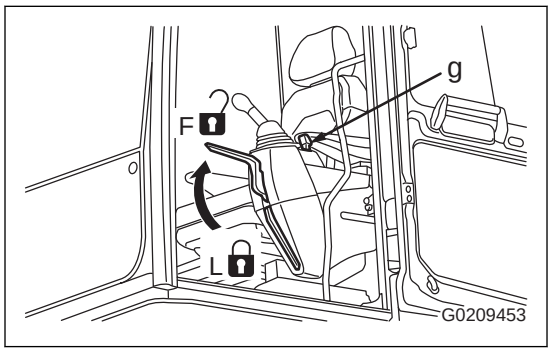

2. Turn the starting switch to the ACC position in 15 seconds after the engine stops, and operate each control lever (work equipment, travel) fully in each direction.

   The internal pressure is released by this operation.

3. Open the cover at the right side of the machine, and examine the sight gauge (1).

   When the oil level is between the lines H and L, it is correct.

   If the oil level is less than the L level, the hydraulic oil level is not sufficient. Do the procedure as follows.

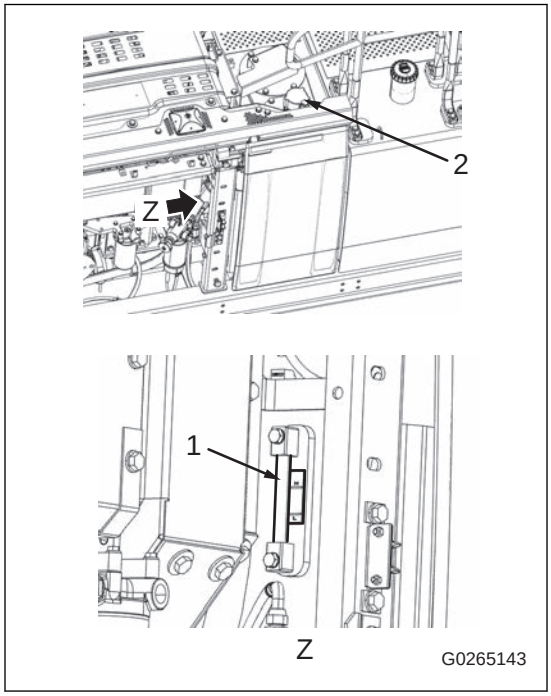

4. Add oil through the oil filler port (2) until the oil level comes between the H and L levels of the sight gauge (1).

NOTICE

Do not add it above the line H. The hydraulic circuit can have damage, or oil will spurt out.
If oil is added above the line H, swing the upper structure to let the drain plug (3) at the bottom of the suction tube come between the right and left tracks. Stop the engine, remove the cover (4) after the hydraulic oil becomes cool, and drain excessive oil to the oil container from the drain plug (3).

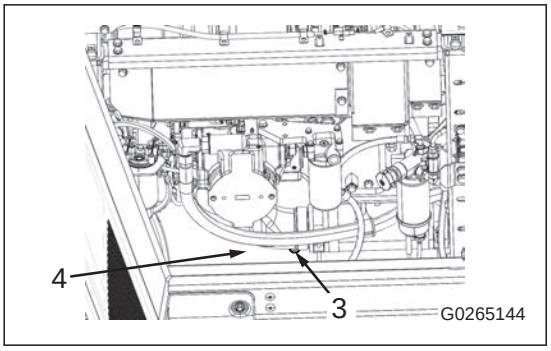

REMARK

The oil level will change in response to the oil temperature. Examine the oil level with the guidelines that follow.

- Between H and L levels before you start operation (Oil temperature: 10 to 30 ℃ {50 to 86 ℉})
- Around H Level during normal operation (Oil temperature: 50 to 80 ℃ {122 to 176 ℉})

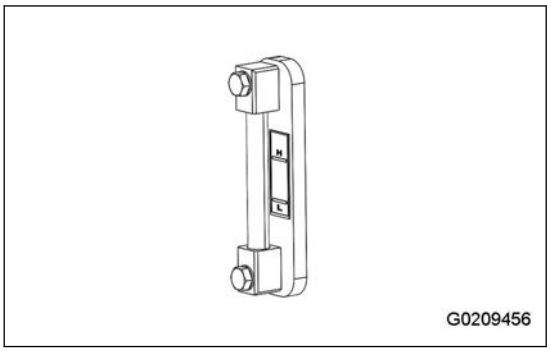

How to Examine Coolant Level and Add Coolant

⚠ WARNING

- **Do not open the expansion tank cap unless necessary. Examine the coolant with the expansion tank level gauge when the engine is cold.**
- **To remove the cap of the expansion tank, wait for the temperature of the machine to go down, and turn the cap slowly and release the pressure carefully. Immediately after the engine stops, the coolant is very hot and the pressure is accumulated in the expansion tank. If you remove the cap in this state, it can cause burn injury.**

NOTICE

If expansion tank (1) is empty, the coolant can be leaked. If a problem is found after inspection, do the repair immediately.

1. Open the cover (2) at the left side of the machine.
2. Lock it securely with the cover support levers (3) (2 places).

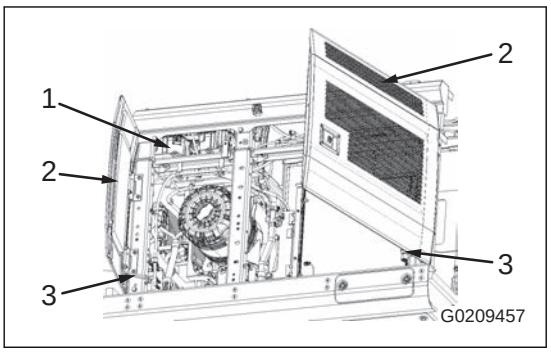

3. Make sure that the coolant level is in the range between FULL and LOW marks of the expansion tank level gauge.

   If the coolant level is in the range between FULL and LOW, the level is correct.

   If the coolant level is below LOW, the coolant is not sufficient. Do the procedure as follows.

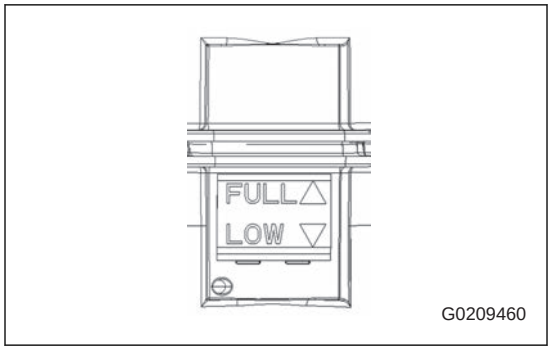

4. Remove the bolts (4) (4 places). Remove the cover (5) on the expansion tank.

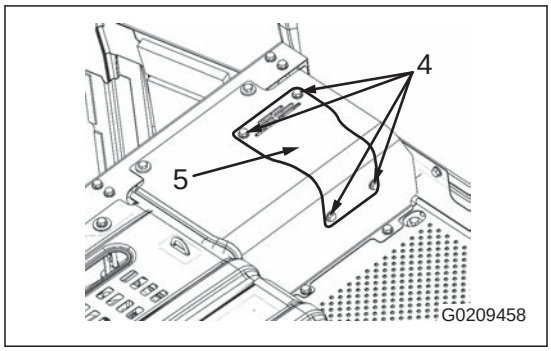

5. Remove the cap (6) of expansion tank, and add coolant up to the FULL line through the filler port.

   REMARK

   If you add too much coolant, excessive coolant will be discharged from the bottom of the undercover through the drain hose of the expansion tank.

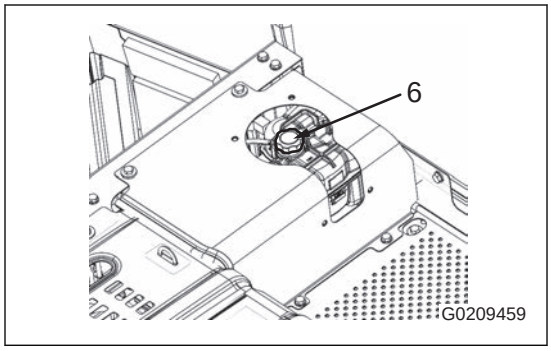

6. After you add, tighten the cap (6) securely. Install the cover (5) with the bolts (4).

   NOTICE

   When you tighten the cap, examine the O-ring (7). If foreign material is attached to the O-ring, remove it. If the O-ring has damage, coolant can leak from it. Replace the cap.

7. Unlock the levers (3). Close the cover (2) at the left of the machine.

   NOTICE

   If the coolant level is low, the radiator coolant level caution lamp comes on. The engine output can decrease. For details, see "Radiator Coolant Level Caution Lamp (3-27)".

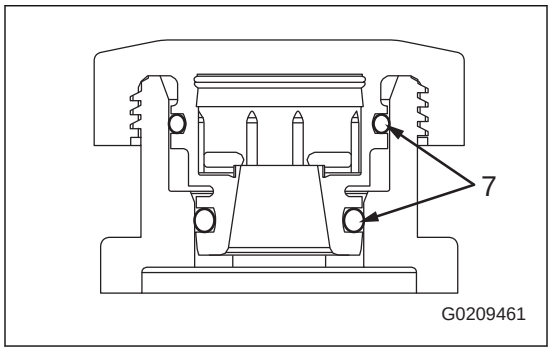

How to Examine Oil Level in Engine Oil Pan, Add Oil

WARNING

Immediately after the engine stops, the parts and oil are very hot, and they can cause burn injury. Wait for the temperature to go down, and then start the work.

- When you examine the oil level after the engine is operated, wait for 15 minutes or more after the engine stops. If the machine is tilted, make it horizontal before the inspection.
- When the ambient temperature is low, water or emulsifier can attach to the dipstick or oil filler cap, or the drained oil can be milky white because of water vapor in the blowby gas. But if the coolant level is not decreased, it is not a problem.

1. Open the engine hood.
2. Pull out the dipstick (1) and wipe the oil off with a cloth.
3. Fully put the dipstick (1) into the dipstick pipe again, then pull it out.

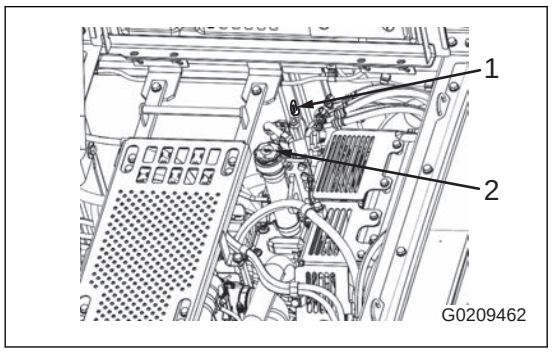

4. Examine if the oil is attached between the marks H and L on the dipstick (1).

   The oil level is correct if it is between the marks H and L.

   If the oil level is less than the mark L, add oil through the oil filler port (2).

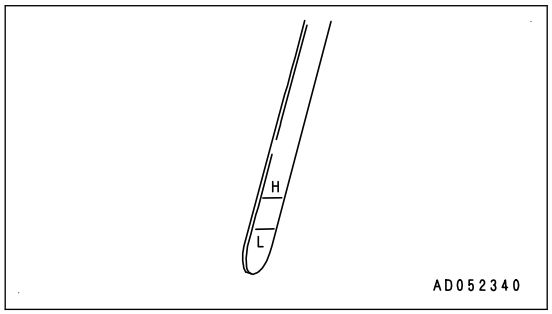

5. If the oil level is above the mark H, decrease it to the applicable level as follows.
   1) Remove the cover (3).
   2) Drain the excessive engine oil through the drain valve (4) at the bottom of the engine oil pan.

      When you drain oil, put the oil container below the drain valve.
   3) Examine the oil level again.
6. If the oil is at the correct level, tighten the filler cap securely, and close the engine hood.

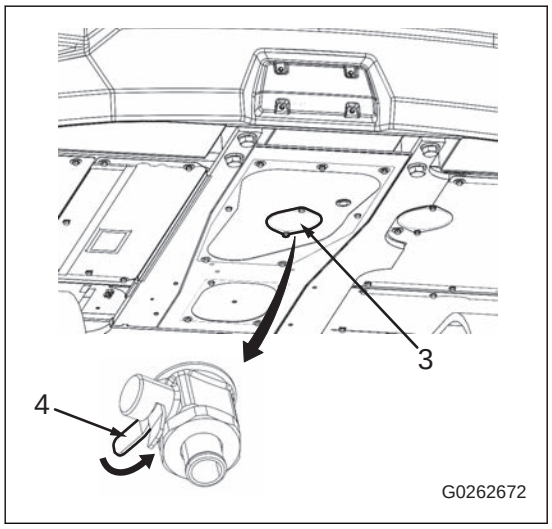

How to Examine Electric Wiring

⚠ CAUTION

- **If the fuse is blown frequently or a short circuit occurred in the electric wiring, immediately consult your Komatsu distributor to find the cause and repair it.**
- **Keep the top surface of the battery clean. If you have a battery cap, examine the vent hole of the cap. If it is clogged with dirt or such, clean the battery cap with water to remove the clogging.**

NOTICE

Be careful about the wiring of “battery” and “alternator”, and do the checks.

Examine the items that follow.

- Make sure that the fuse has no damage, and make sure that the fuse of the specified capacity is used.
- Make sure that there is no wire breakage or sign of short-circuit in the electric wiring and no damage to the coating.
- Make sure that the terminal is not loose. If it is loose, retighten it.
- Make sure that no flammable material is accumulated around the battery, and remove such flammable material if you find it.

How to Examine Fuel Level and Add Fuel

⚠ WARNING

When you add fuel, do not let it overflow. It can cause a fire.
Wipe up all the spilled fuel fully. If it spills over soil or sand, remove that soil or sand.
Fuel is flammable and dangerous. Do not let an open flame be near it.

1. Turn the starting switch to the ACC position (B), and log on to the system. When the fuel level caution lamp (1) comes on in red, examine the fuel level with the fuel gauge (2) on the machine monitor.

   When the gauge of the fuel gauge (2) is in the red range, the fuel quantity is 44 ℓ {11.6 US gal} or below.

   The fuel level is low. Add fuel.
2. After the check, turn the starting switch back to the OFF position (A).

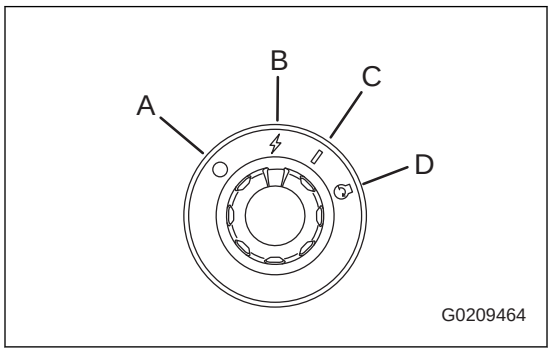

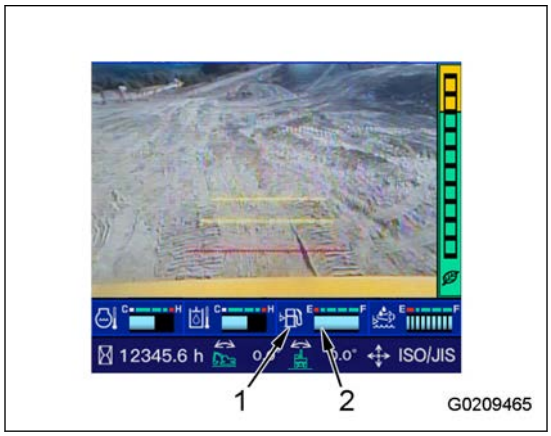

3. Open the filler port cap (F) on the fuel tank, and add fuel through the filler port until the float gauge (G) moves to the highest point.

   Fuel tank capacity: 350 ℓ {92.5 US gal}

   Position (a) of front end of float gauge (G) when fuel tank is full: Approximately 50 mm {2 in}

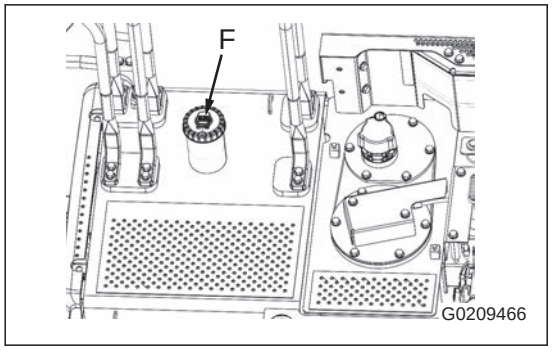

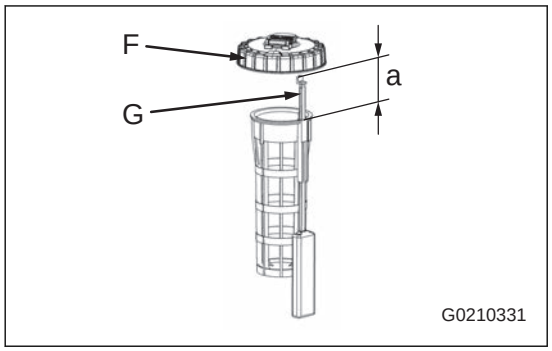

REMARK

If the breather hole (4) in the cap is clogged, the pressure in the tank will go down in some cases, and this causes fuel flow to stop. To prevent this, clean the breather hole from time to time.
When you blow air for cleaning, blow from the hole (5) on the tank side. If air is blown directly into the breather hole (4), foreign material can accumulate in the tank cap. It can block internal vent holes and cause deterioration of filter function in a short time. At this time, air blowing onto the key lock tab (6) will have no effect.

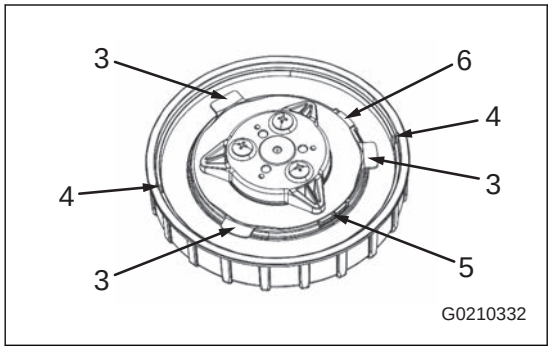

4. After you add fuel, push the float gauge (G) straight down with the filler port cap (F). Be careful not to get the float gauge (G) caught in the protrusion (3) of the filler port cap, and tighten the filler port cap (F) securely.

How to Examine DEF Level and Add DEF

⚠ WARNING

- **Do not put fluid other than DEF into DEF tank.**
- **Keep your face apart from the filler port when you open the DEF tank cap of the machine. A poisonous ammonia gas can come out.**
- **Before you remove the filler cap, wipe off the dirt around the filler port. Before you insert the filler nozzle into the filler port, wipe off dirt around it. Foreign materials in the DEF system or urea deposits caused by precipitation of urea can interfere with the operation of the devices.**
- **If DEF is spilled, immediately wipe and clean the area with water. If spilled DEF is not cleaned up, a chemical reaction can cause poisonous gas and corrosive material.**

NOTICE

- **Do not add DEF higher than the line F (6) of the sight gauge (4). DEF can leak through the breather. Be careful of the DEF line to be added when you operate the machine on a slope or rough ground. When the remaining DEF level is low, it can reach the warning level if the DEF pump sucks air, or if the DEF level suddenly decreases.**
- **When you add DEF, do not move DEF into the other container. If DEF is not stored in the applicable container, foreign material can mix in it and poisonous gas or corrosive material can occur by chemical reactions.**
- **Do not use a funnel when you add DEF. If you use a funnel, the strainer can have damage.**
- **When you use a portable DEF refill container, use up DEF each time. If some quantity of DEF is left, remove foreign material, if necessary.**
- **Do not clean the adding nozzle in tap water. Minerals can clog the devices.**
- **Do not mix DEF with water.**
- **If you add fluid other than DEF (diesel fuel, low concentration DEF, or such) by mistake, the caution lamp comes on, and the alarm display and alarm buzzer operates to show the failure. When you drain and examine fluid that is added by mistake, consult your Komatsu distributor. The DEF injector or DEF pump possibly needs to be replaced.**

1. Turn the starting switch to the ON position (C), and log on to the system.

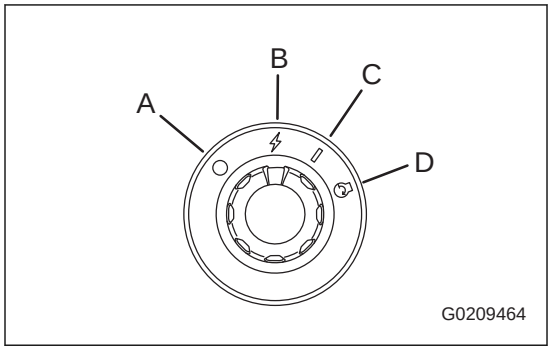

2. Examine the DEF level gauge (1) on the machine monitor.
3. After the check, turn the starting switch back to the OFF position (A).
4. Make sure that the engine stops.

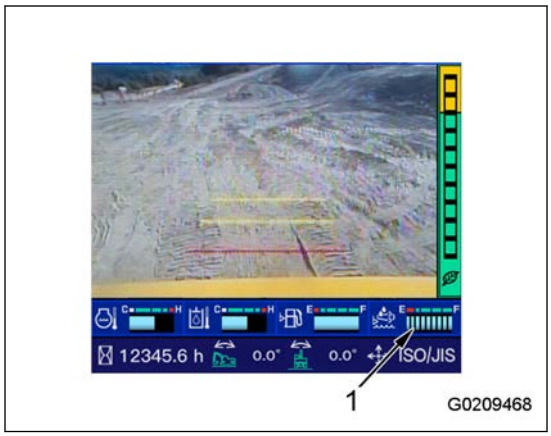

5. If DEF is not sufficient, add it.

   If you add DEF with the BIB container, see “How to Add DEF from BIB Container (3-213)”.

   1) Open the cover (2) at the right side of the machine to up, and turn the cap of the filler port (3) counterclockwise to open it.

      As required by the emission regulations, the color of the DEF tank cap is blue.

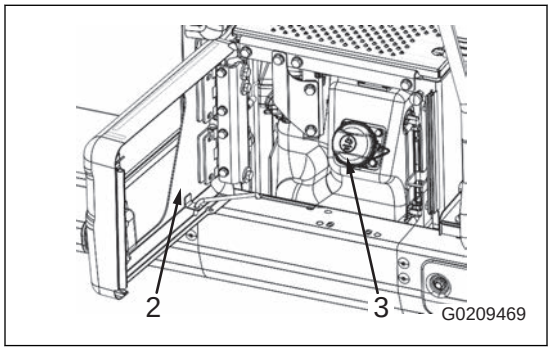

2) Add DEF through the filler port until the float (5) reaches the line F (6) while you see the level from the sight gauge (4).

The lines in the sight gauge show the positions that follow.
Line (7): Position of approximately 10 ℓ {2.64 US gal} up to line F (6)
Line (8): Position of approximately 20 ℓ {5.28 US gal} up to line F (6)

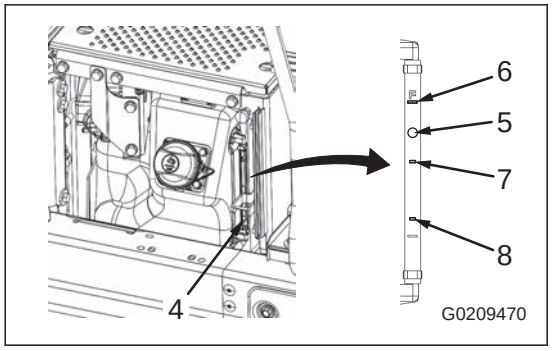

6. After you add it, align the claw (10) of the cap with the groove (11) of the filler port and turn the cap clockwise by 90 ° to close it securely.

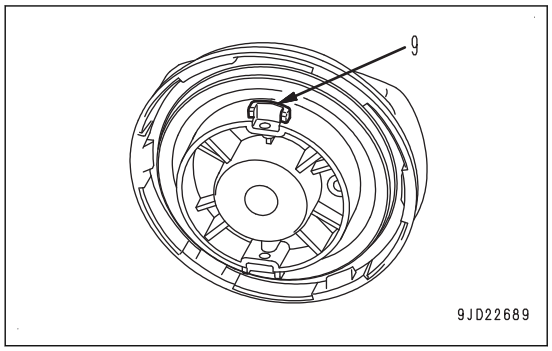

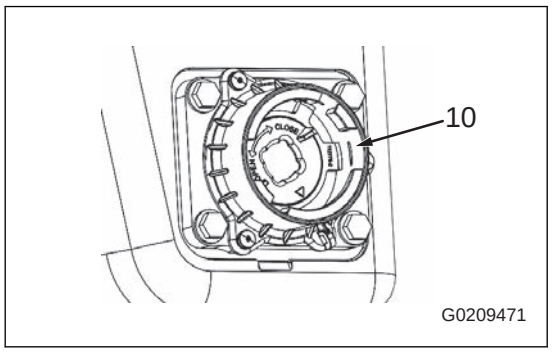

REMARK

- For the supply device of DEF, it is recommended to use a nozzle which has a diameter and a length specified by ISO22241-4 and has an auto stop function. When the specified nozzle is used, the magnet installed in the filler port of the tank cancels the inappropriate fluid addition prevention device, and you can add DEF. This mechanism prevents mistaken addition of DEF into the fuel tank, mistaken addition of fuel into the DEF tank, and spill of DEF from the filler port.
- When you use a nozzle which does not agree with ISO22241-4, hold it in your hand and add DEF carefully while you see the sight gauge.
- Add DEF in the DEF tank that has the blue cap.

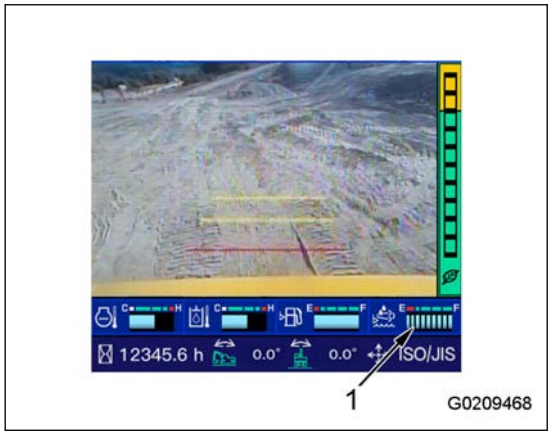

- If you start the system immediately after you add DEF, the display of the correct level by the DEF level gauge (1) on the machine monitor can be late.

How to Add DEF from BIB Container

⚠ CAUTION

- **Before you open or close the right front cover of the machine, lower the work equipment to a level ground, and stop the engine.**
- **Do not put your feet or hands on the installed filler stand. Do not lean on it.**
- **The weight of a 20 ℓ {5.28 US gal} BIB container is 22 kg {48.51 lb}.**
  After you install the filler rack securely, put the BIB container on the filler rack.

Prepare a 20 ℓ {5.28 US gal} BIB container.

1. Stop the machine on a level ground, and lower the work equipment to the ground.

   If the machine is tilted, Set it in level.
2. Stop the engine.
3. Open the cover (2) at the front right side of the machine to the side, and clean the blue cap of the DEF tank filler port (3) and the area around it.

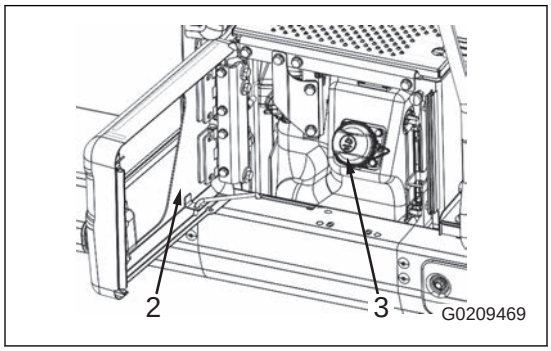

4. Remove the fixing band (4). Take out the filler rack (5).

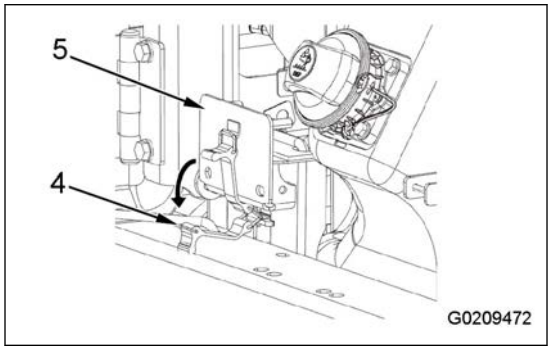

5. Remove the bar (10) fixed to the filler rack (5) from the clips and insert it into the holes (11) on the top of the filler rack (5).
6. Insert the bar (6) of the filler rack (5) into the hole (7) of the revolving frame while you push the rubber sheet (8) onto the side surface (9) of the revolving frame.

   It is used as the filler stand to put the BIB container.

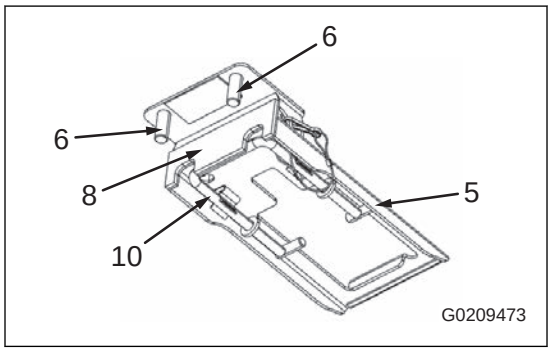

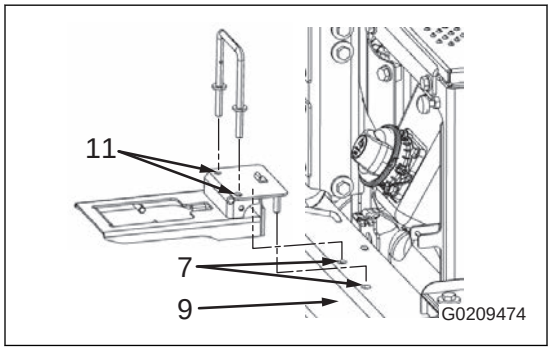

7. Put the BIB container on the filler stand slowly.
8. Turn the cap of the filler port (3) counterclockwise to open it.

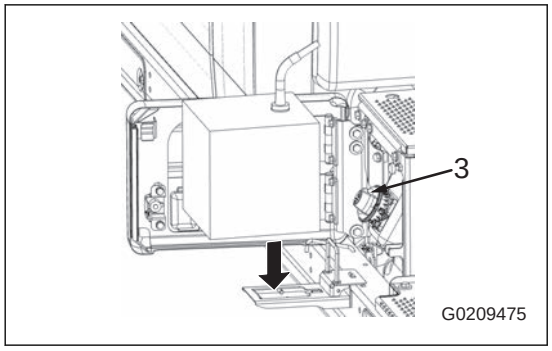

9. Insert the bellows hose of the BIB container into the filler port (3).

   If you cannot insert the bellows hose into the filler port (3) easily, use the upper end (12) of the bar on the upper surface of the filler stand as a leverage point, and insert it while you lift the other end of the BIB container.

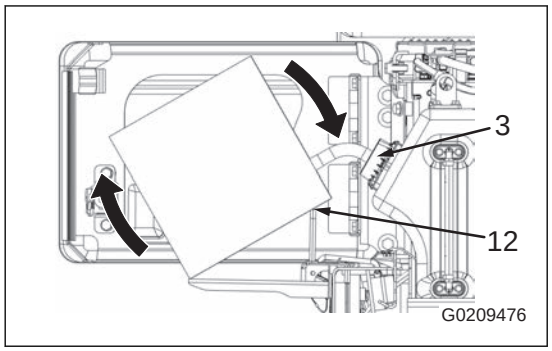

10. Add DEF through the filler port until the float (14) reaches the line F (15) while you see the level from the sight gauge (13).

    The lines in the sight gauge show the positions that follow.

    Line (16): Position of approximately 10 ℓ {2.64 US gal} up to line F (15)

    Line (19): Position of approximately 20 ℓ {5.28 US gal} up to line F (15)

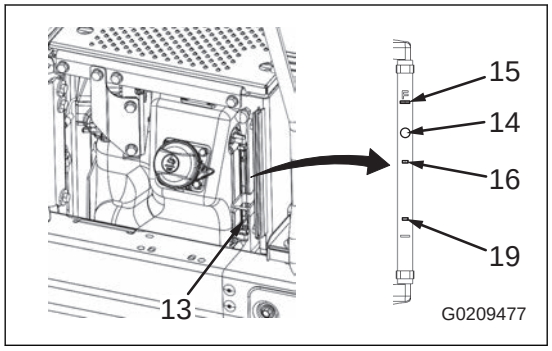

11. After you add it, align the claw (17) of the cap with the groove (18) of the filler port and turn the cap clockwise by 90 ° to close it securely.

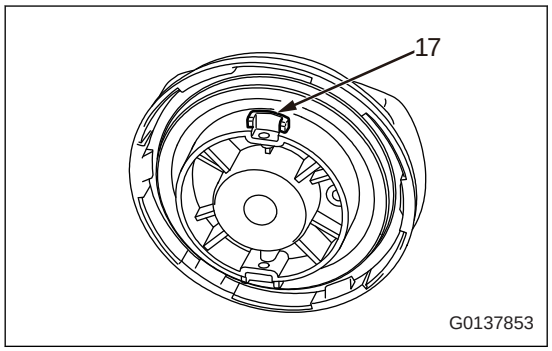

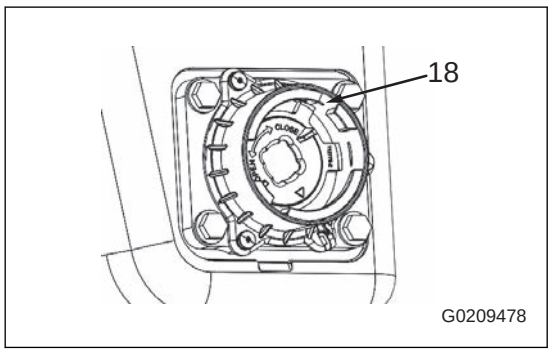

12. Put the used bar (10) back to the original position.

    REMARK

    Be sure to lock the bar at the position shown in the figure. At different positions, it cannot be stored correctly.

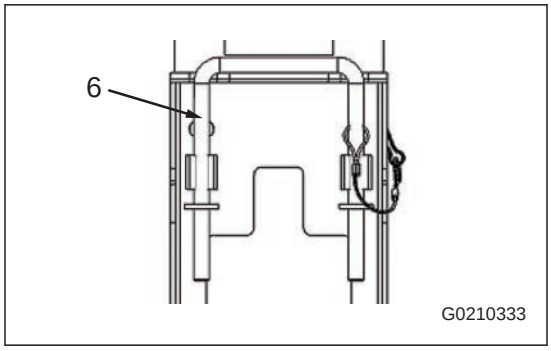

13. Move the used filler rack (5) back to the original position as you insert the lateral bar (12) into the gap (13). Hang the fixing band (4) on the hook (14) and fix it.

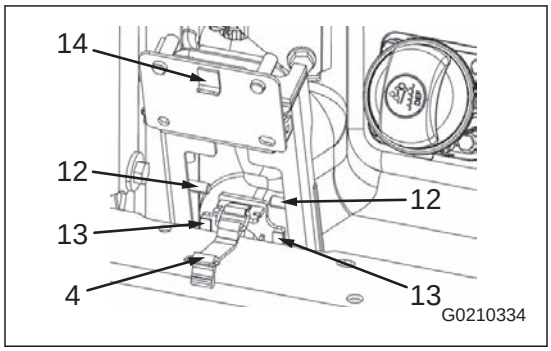

How to Examine Working Lamp

Examine the working lamp to see if it comes on correctly and is free from dirt and damage.

1. Turn the starting switch to the ACC position.
2. Push the lamp switch (1) to the ON position, and make sure that the working lamp comes on.

   When the LED next to the lamp switch (1) is on, it is ON.
3. After the check, push the lamp switch (1) to turn it off, and let the working lamp go off.

   When the LED next to the lamp switch (1) is off, it is OFF.

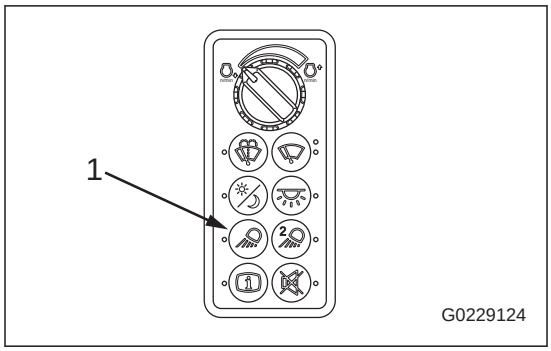

If the working lamp does not come on, a burned-out bulb and disconnected wire are the possible causes. Consult your Komatsu distributor for repair.

How to Examine Horn

1. Turn the starting switch to the ACC position.
2. Push the horn switch (1), and make sure that the horn operates immediately.
3. After the check, turn the starting switch back to the OFF position.

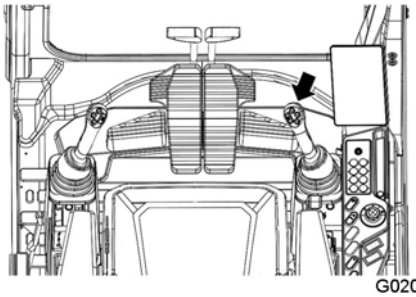

If the horn does not operate, consult your Komatsu distributor for repair.

How to Examine Object Avoidance

1. Turn the starting switch to the ACC position, and log on to the system.

   For the log on procedure, see “Basic Operation of Machine Monitor When You Start Engine in Normal Situation (3-10)”.
2. Make sure that the object avoidance icon (1) on the machine monitor is shown in (a), (b), or (c) conditions in the table below.

Color of icon		Status of system
a	Icon: Green Background: Black	During operation
b	Icon: Black Background: Yellow	
c	Icon: White Background: Red	
d	Icon: Gray Background: Black	System failure in progress

3. After the check, turn the starting switch back to the OFF position.

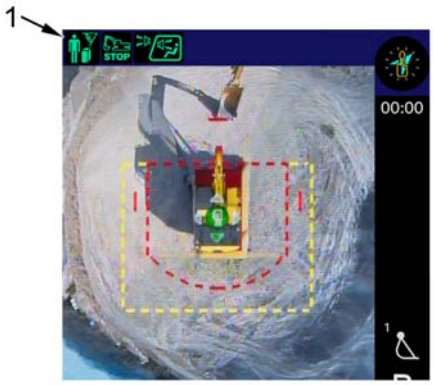

If the icon is shown as (d), consult your Komatsu distributor for repair.

How to Adjust

How to Adjust Operator Seat

⚠ WARNING

When adjusting the position of the operator's seat, always set the lock lever to LOCK position to prevent any malfunction due to accidental contact with the control levers.

NOTICE

If the seat position is adjusted while the parts, tools, or empty cans are left around the operator's seat, the peripheral parts or operator's seat may be damaged.
Check that there is no parts etc., around the operator's seat, and adjust the seat position.

- Always adjust the operator's seat before starting each operation or when the operators change shift.
- Adjust the operator's seat so that control levers and switches can be operated freely and easily with the operator's back against the backrest.

How to Adjust Seat Fore-and-Aft Direction

Pull the fore-aft adjustment lever up, adjust the seat to the desired position, and then release the lever.
Fore-aft adjustment quantity: 160 mm {6.3 in} (16 steps)

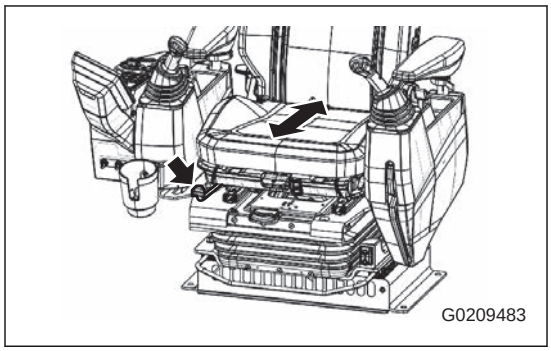

How to Recline Seat

The degree of reclining of the seat becomes large when the seat is moved forward, and becomes smaller as the seat is moved rearward. When you move the seat rearward, move the backrest back to the initial position.

Pull up the reclining adjustment lever to adjust the backrest to a position where it is easy to operate, and then release the lever.

REMARK

Sit with your back against the backrest to adjust the reclining angle. If your back is not on the backrest, it can suddenly go back to the initial position.

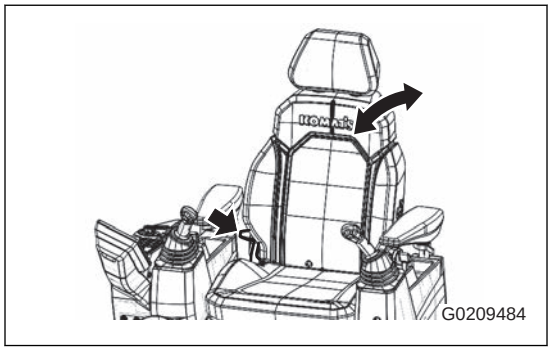

How to Adjust Seat Cushion in Fore-After Direction

Pull the seat fore-aft adjustment lever up. Adjust the seat to the desired position. Release the lever.
Fore-aft adjustment quantity: 60 mm {2.4 in} (6 steps)

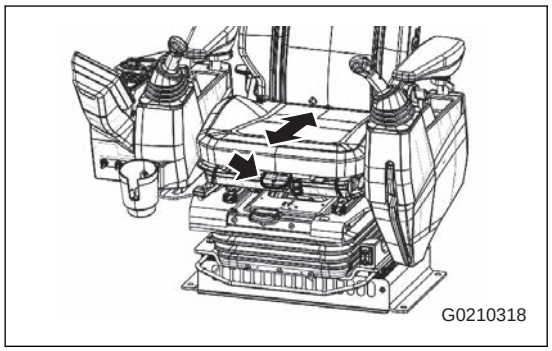

How to Tilt Seat

Pull up the tilt adjustment lever and adjust the front angle of the seat.

- To raise the front angle of the seat, apply your weight to the rear of the seat, while you pull up the lever.
- To lower the front angle of the seat, apply your weight to the front of the seat, while you pull up the lever.

Tilt adjustment quantity: 5° up to 5° down (stepless)

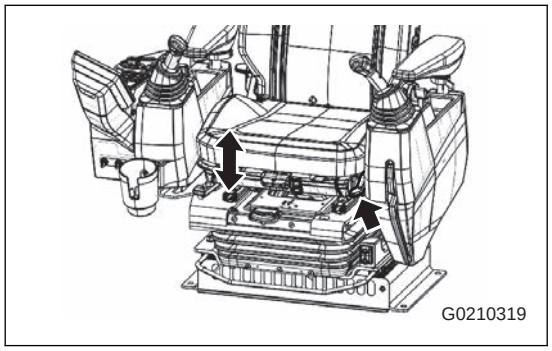

How to Adjust Headrest in Vertical Direction

Move the headrest up or down to adjust it to the desired height.
Adjustment length: 90 mm {3.5 in} (6 steps)

NOTICE

When you adjust the height of the headrest, operate it until the shaft of the headrest is straight. If it is twisted by force, it can cause damage to the installation part.

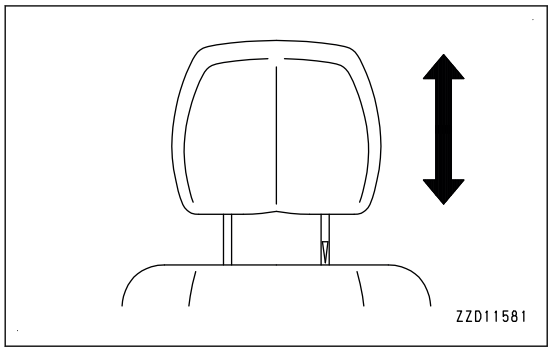

How to Adjust Armrest Height

CAUTION

Tighten the adjustment lever securely to prevent looseness. If it is loose, retighten it.

Operate the adjustment lever at the root of the armrest post to adjust the height of the armrest.

Armrest height adjustment quantity: 50 mm {2 in} (stepless)

1. Set the adjustment lever at the root of the armrest post to the released position (1).
2. Adjust the armrest to the desired height and set the adjustment lever back to the LOCK position (2).

   NOTICE

   Make sure that the adjustment lever is securely in the LOCK position. If you put weight on the armrest while it is not in the LOCK position, the armrest can fall.

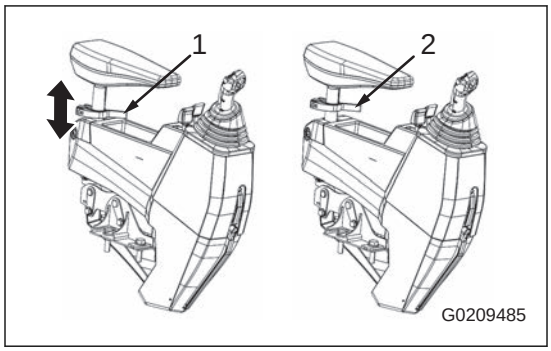

How to Adjust Armrest Angle

For the armrest (1), turn the adjustment dial (2) on the bottom of the armrest to adjust the angle up and down.
Angle adjustment quantity: 5° down to 4° up

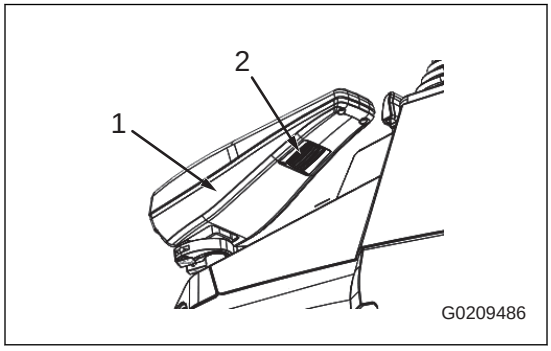

How to Adjust Console Height

Operate the adjustment lever (yellow) on the near side of the work equipment control lever to adjust the height of the console.

Height adjustment quantity: 55 mm {2.2 in} (3 steps)

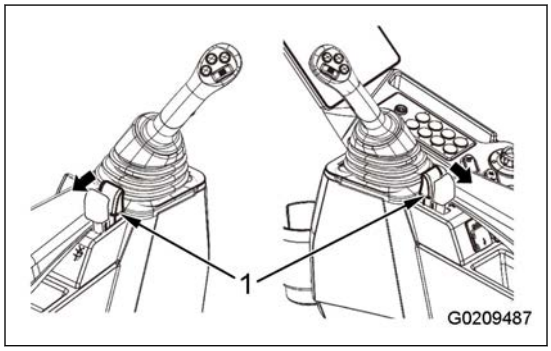

1. Pull the adjustment lever (1) to your side.
2. Adjust the console to the desired position. Release the lever.

   NOTICE

   Make sure that the adjustment lever is securely in the LOCK position.

How to Adjust Flip-up of Lock Lever and Console

Operate the adjustment lever (red) on the near side of the work equipment lever to adjust the spring-up of the lock lever and the console.

1. When you push the adjustment lever from position (2) to the front (1), the red bar at the end of the console rises (F), and the machine moves.
2. When you pull the adjustment lever from position (1) to position (2), the red bar at the front of the console goes down (L), and the machine does not move.
3. When you pull the adjustment lever from position (2) to position (3), the left console will jump up. You will have a wider path to walk through.
4. When you push down on the armrest or console, the console goes back to the operating position.

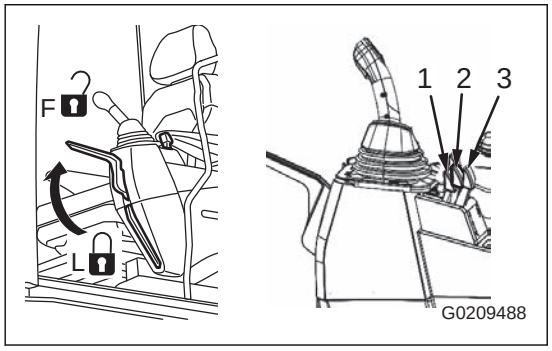

NOTICE

Do not hold the lock lever when you lock or stow. It can cause damage to the lock lever.

How to Adjust Seat Unit in Fore-and-Aft Direction

Pull the fore-aft adjustment lever (1) up, adjust the seat to the desired position, and then release the lever.
The operator's seat, right and left control levers, and lock lever move together.

Fore-aft adjustment quantity: 180 mm {7.1 in} (18 steps)

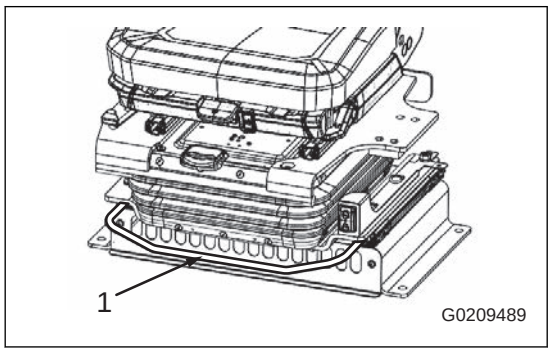

How to Adjust Suspension Seat Hardness

NOTICE

Do not operate the adjustment switch (1) continuously for 1 minute or more. It can cause damage to the air compressor.

Turn the starting switch to the ON position when you adjust the seat hardness because the air compressor built in the suspension is used for this adjustment.

1. Operate the adjustment switch (1) to adjust the hardness.
2. Adjust it to let the scale (2) on the upper side of the suspension go in the green range.

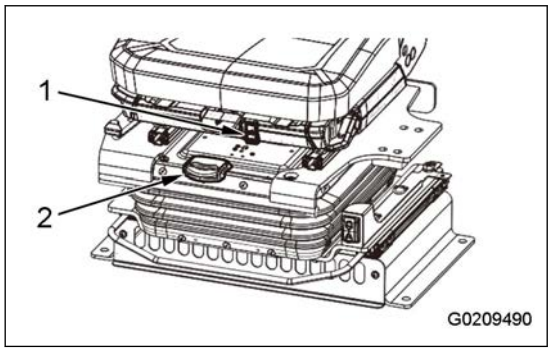

- Push the upper part of the adjustment switch to adjust the suspension harder.
- Push the lower part of the adjustment switch to release the air and make the suspension softer.
  (You will hear the sound of air released.)
  Body weight adjustment range: 60 to 180 kg {132.3 to 396.9 lb}

How to Remove and Install Headrest

How to Remove Headrest

When the headrest is not necessary, remove it as follows.

Pull up the headrest 200 mm {8 in} or more.
The headrest is pulled out.

NOTICE

When you remove the headrest, operate it until the shaft of the headrest is straight. If it is twisted by force, it can cause damage to the installation part.

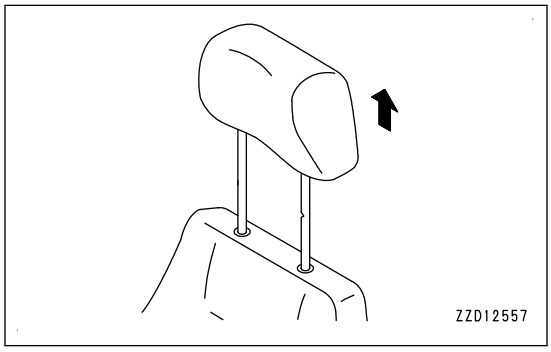

How to Install Headrest

1. Insert the headrest into the hole at the seat back.

   When installing, turn the notch of the shaft toward the front of the machine.

2. Push down the headrest.

   NOTICE

   When installing the headrest, operate it so that the shaft of the headrest becomes straight. If it is forcibly twisted, the installation part may be broken.

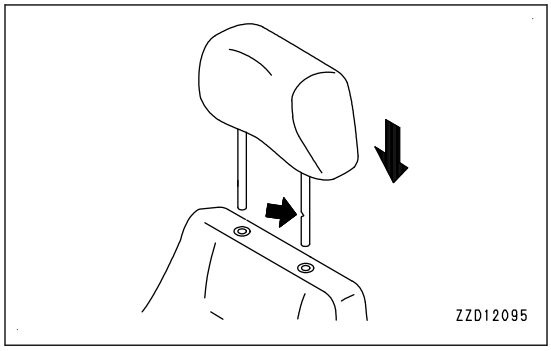

How to Adjust Mirrors

WARNING

Be sure to adjust the mirrors before the work. If the mirrors are not correctly adjusted, you cannot keep the visibility. There is a danger that you will suffer injury, or a personal injury or death is caused.

CAUTION

To prevent the machine movement during the work, make sure that the machine is in the conditions that follow before you start the work.

- **The machine stops on a level ground.**
- **The work equipment is lowered to the ground fully in a stable attitude.**
- **The lock lever is at the LOCK position.**
- **The engine stops.**

Mirror (A): Machine left front mirror

Mirror (B): Machine right front mirror

Mirror (C): Machine right side mirror

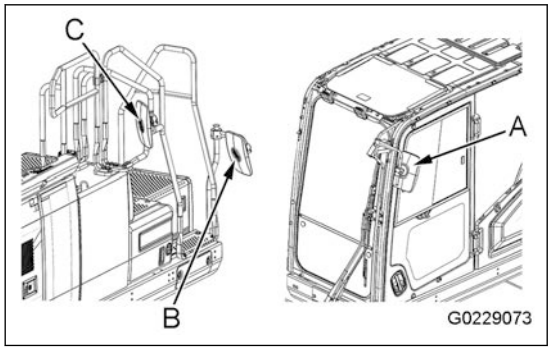

Procedure to Adjust Left Front Mirror (A)

⚠ CAUTION

To prevent the machine movement during the work, make sure that the machine is in the conditions that follow before you start the work.

- **The machine stops on a level ground.**
- **The work equipment is lowered to the ground in a stable attitude.**
- **The lock lever is in the LOCK position.**
- **The engine stops.**

Adjust the mirror until you can see a person at the rear left end of the machine.

1. Adjust the mirror with your hand to let the side of the machine be reflected in the mirror as shown in the figure.
2. Make sure that you can see a person at the rear left end of the machine.

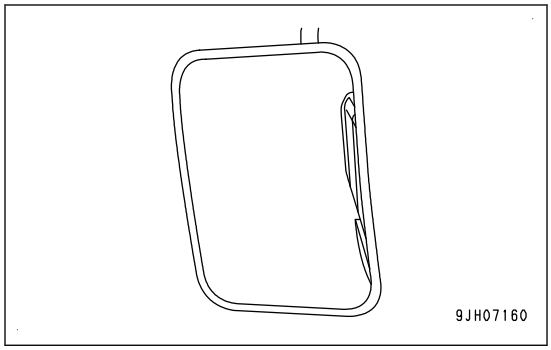

3. If you cannot adjust the mirror, loosen the mounting bolt (1) for the mirror and stay, and adjust the angle.

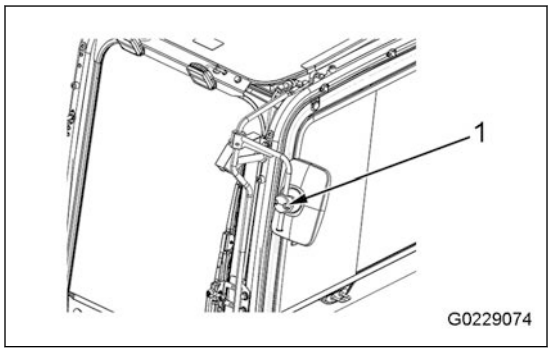

NOTICE

When you loosen the mounting bolts to adjust the angle, be sure to adjust the mirror to the specified position. For the adjustment, see “Procedure to Adjust Regular Position of Machine Left Front Mirror (A) (3-224)”.

Procedure to Adjust Regular Position of Machine Left Front Mirror (A)

⚠ CAUTION

To prevent the machine movement during the work, make sure that the machine is in the conditions that follow before you start the work.

- **The machine stops on a level ground.**
- **The work equipment is lowered to the ground in a stable attitude.**
- **The lock lever is in the LOCK position.**
- **The engine stops.**

When you move the mirror to its specified position, do the adjustment as follows.

NOTICE

If you loosen the mounting bolts (4) or (6) of the mirror or stay to adjust the angle, the mirror or stay can touch the machine body when you stow the mirror and cause damage. If you loosen the mounting bolts for an unavoidable reason to adjust the angle, set them back to the specified position before you stow the mirror.

1. Adjust the stay (1).

   Mounting angle (2): 90 °

   Mounting position (3): 43 mm {1.7 in}

   Tightening torque of mounting bolt (4): 34 to 74 Nm {3.5 to 7.5 kgfm, 25.3 to 54.2 lbft}

2. Adjust the mirror (5).

   Tightening torque of mounting bolt (6): 6.0 to 7.0 Nm {0.61 to 0.71 kgfm, 4.41 to 5.14 lbft}

   Mounting position (7): 73 mm {2.9 in}

   Mounting angle (8): 83 °

   Mounting angle (9): 10 °

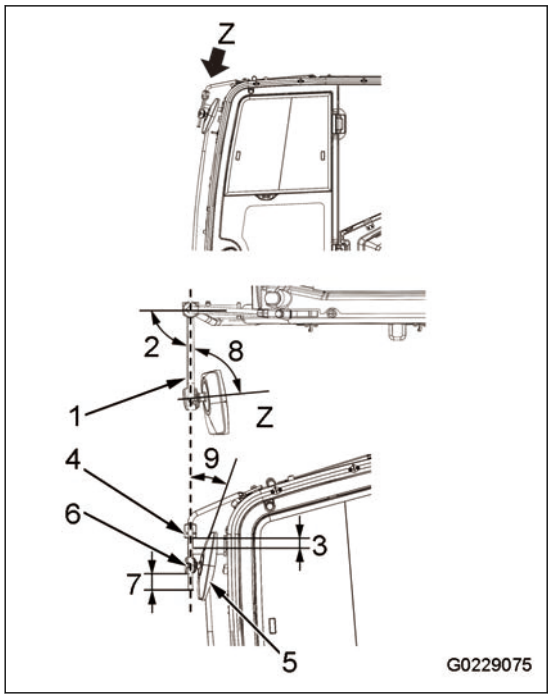

NOTICE

- **Tighten the right and left bolts of each bracket in one and then the other to make their right and left clearances (R) and (L) equal.**
- **If the mounting bolts for the mirror and stay are tightened too much, the bracket can have damage. Tighten the bolts to the specified torque.**

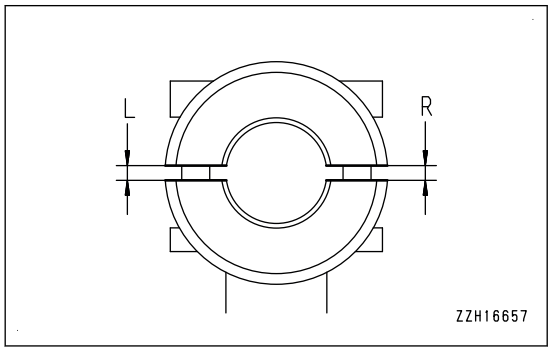

Adjust the mirror to let the side of the machine show in it as in the figure.

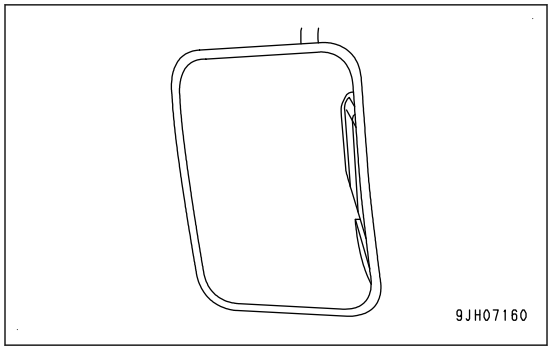

Procedure to Adjust Right Front Mirror (B)

CAUTION

To prevent the machine movement during the work, make sure that the machine is in the conditions that follow before you start the work.

- **The machine stops on a level ground.**
- **The work equipment is lowered to the ground in a stable attitude.**
- **The lock lever is in the LOCK position.**
- **The engine stops.**

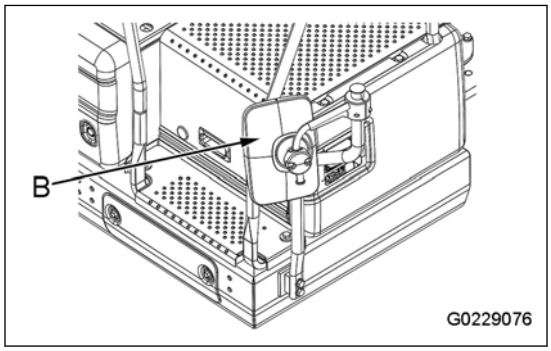

Adjust the mirror as you can see a person at the rear right end of the machine.

1. Adjust the mirror with your hand to let the side of the machine be reflected in the mirror as shown in the figure.

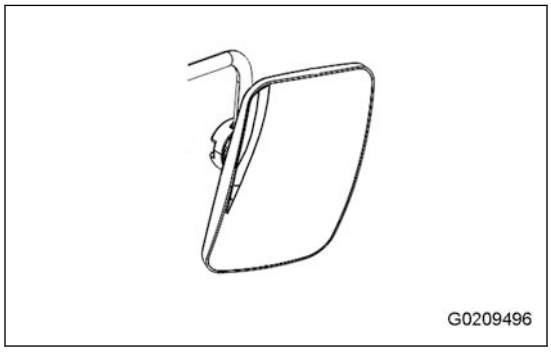

2. Adjust until you can see a person in 1m {3 ft 3 in} of the machine from the operator seat.

   (W): 1 m {3 ft 3 in}

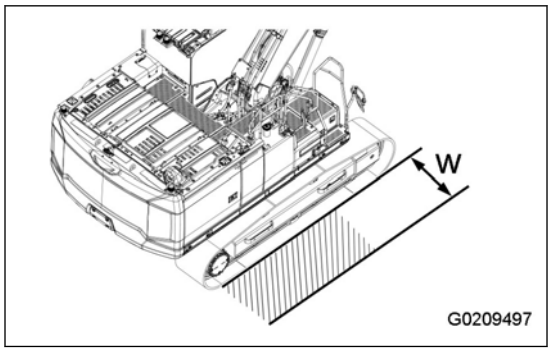

3. If you cannot adjust the mirror, loosen the mounting bolts (1) and (2) for the mirror and stay, and adjust the angle.

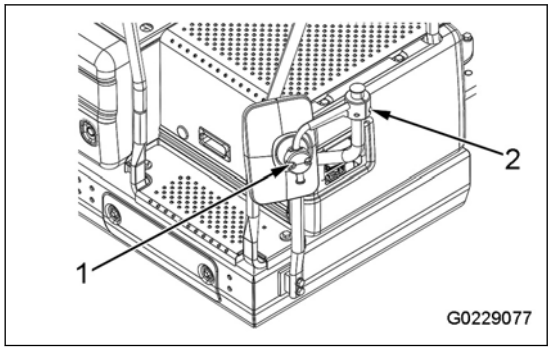

NOTICE

If you loosen the mounting bolts for adjustment, be sure to adjust the mirror to its specified position. For the adjustment, see "Procedure to Adjust Regular Position of Machine Right Front Mirror (B) (3-226)".

Procedure to Adjust Regular Position of Machine Right Front Mirror (B)

⚠ CAUTION

To prevent the machine movement during the work, make sure that the machine is in the conditions that follow before you start the work.

- **The machine stops on a level ground.**
- **The work equipment is lowered to the ground in a stable attitude.**
- **The lock lever is in the LOCK position.**
- **The engine stops.**

When you move the mirror to its specified positions, do the adjustment as follows.

NOTICE

If you loosen the mounting bolts (4) or (6) of the mirror or stay to adjust the angle, the mirror or stay can touch the machine body when you stow the mirror and cause damage. If you loosen the mounting bolts inevitably to adjust the angle, set them back to the specified position before you stow the mirror.

1. Adjust the stay (1).

   Mounting angle (2): 86 °

   Mounting position (3): 27 mm {1.1 in}

   Tightening torque of mounting bolt (4): 34 to 74 Nm {3.5 to 7.5 kgfm, 25.3 to 54.2 lbft}

2. Adjust the mirror (5).

   Tightening torque of mounting bolt (6): 6.0 to 7.0 Nm {0.61 to 0.71 kgfm, 4.41 to 5.14 lbft}

   Mounting position (7): 32 mm {1.3 in}

   Mounting angle (8): 69 °

   Mounting angle (9): 6 °

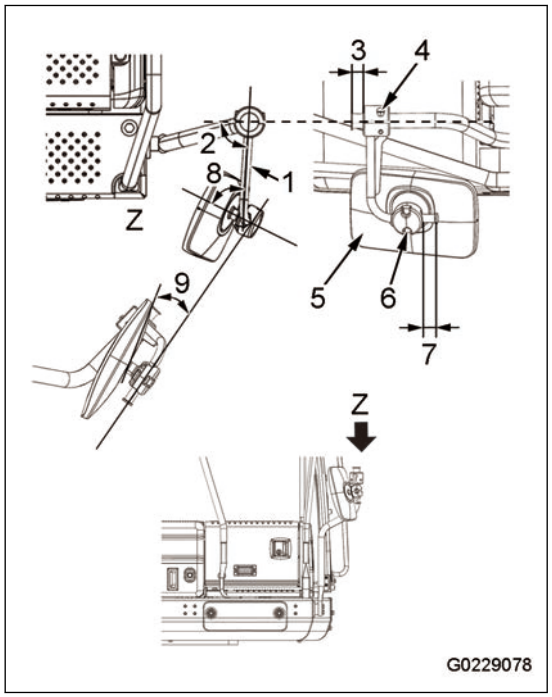

NOTICE

- **Tighten the right and left bolts of each bracket in one and then the other to make their right and left clearances (R) and (L) equal.**
- **If the mounting bolts for the mirror and stay are tightened too much, the bracket can have damage. Tighten the bolts to the specified torque.**

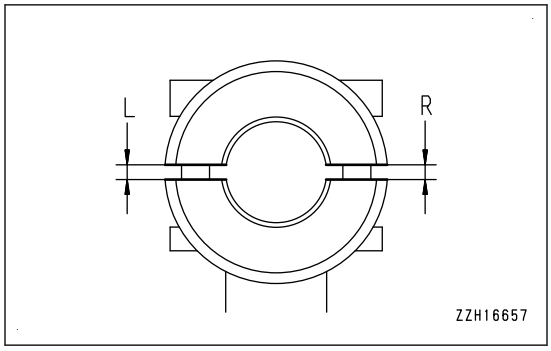

When the mirror is adjusted to the position where the side of the machine can be seen in it as in the figure, the adjustment is completed.

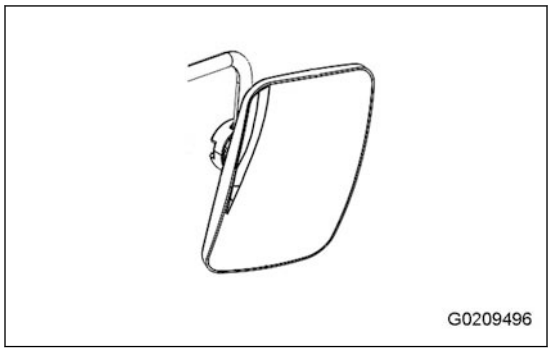

Procedure to Adjust Machine Right Side Mirror (C)

⚠ CAUTION

To prevent the machine movement during the work, make sure that the machine is in the conditions that follow before you start the work.

- **The machine stops on a level ground.**
- **The work equipment is lowered to the ground in a stable attitude.**
- **The lock lever is in the LOCK position.**
- **The engine stops.**

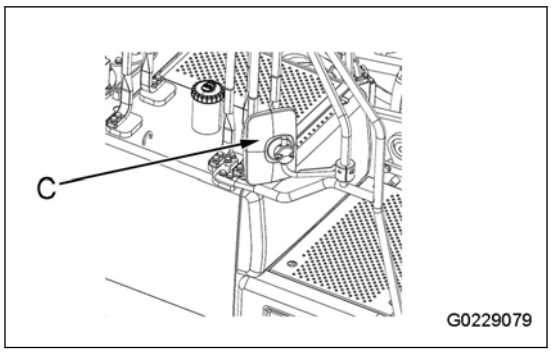

Adjust the mirror until you can see a person at the right end of the machine.

1. Adjust the mirror with your hand to let the side of the machine be reflected in the mirror as shown in the figure.
2. Make sure that you can see a person at the rear right end of the machine.

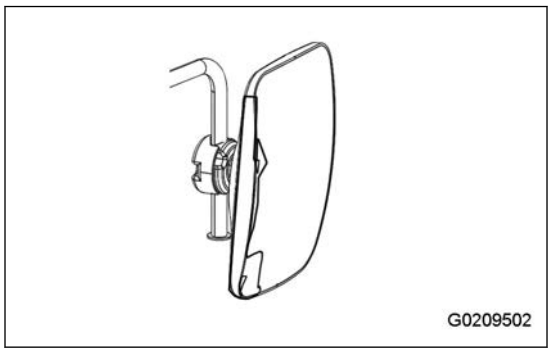

3. If you cannot adjust the mirror, loosen the mounting bolts (1) and (2) for the mirror and stay, and adjust the angle.

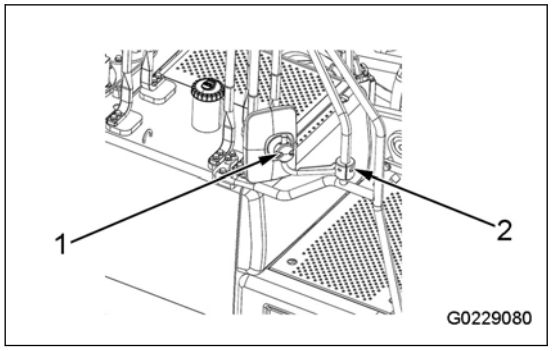

NOTICE

If you loosen the mounting bolts for adjustment, be sure to adjust the mirror to its specified position. For the adjustment, see "Procedure to Adjust Regular Position of Machine Right Side Mirror (C) (3-228)".

Procedure to Adjust Regular Position of Machine Right Side Mirror (C)

⚠ CAUTION

To prevent the machine movement during the work, make sure that the machine is in the conditions that follow before you start the work.

- **The machine stops on a level ground.**
- **The work equipment is lowered to the ground in a stable attitude.**
- **The lock lever is in the LOCK position.**
- **The engine stops.**

When you move the mirror to its specified positions, do the adjustment as follows.

NOTICE

If you loosen the mounting bolts (4) or (6) of the mirror or stay to adjust the angle, the mirror or stay can touch the machine body when you stow the mirror and cause damage. If you loosen the mounting bolts for an unavoidable reason to adjust the angle, set them back to the specified position before you stow the mirror.

1. Adjust the stay (1).

   Mounting angle (2): 38 °

   Mounting position (3): 27 mm {1.1 in}

   Tightening torque of mounting bolt (4): 34 to 74 Nm {3.5 to 7.5 kgfm, 25.3 to 54.2 lbft}

2. Adjust the mirror (5).

   Tightening torque of mounting bolt (6): 6.0 to 7.0 Nm {0.61 to 0.71 kgfm, 4.41 to 5.14 lbft}

   Mounting position (7): 30 mm {1.2 in}

   Mounting angle (8): 107 °

   Mounting angle (9): 5 °

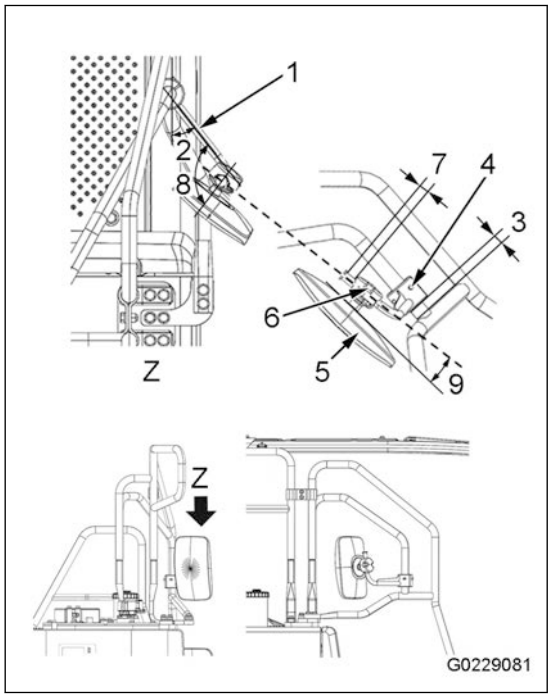

NOTICE

- **Tighten the right and left bolts of each bracket in one and then the other to make their right and left clearances (R) and (L) equal.**
- **If the mounting bolts for the mirror and stay are tightened too much, the bracket can have damage. Tighten the bolts to the specified torque.**

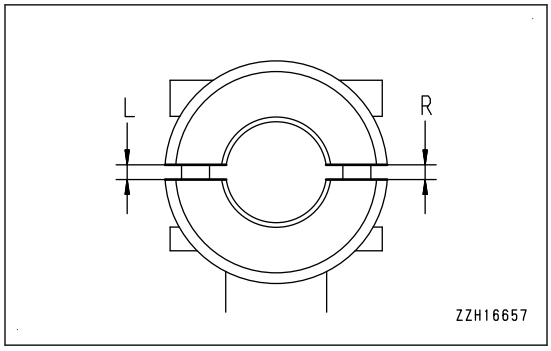

When the mirror is adjusted to the position where the side of the machine can be seen in it as in the figure, the adjustment is completed.

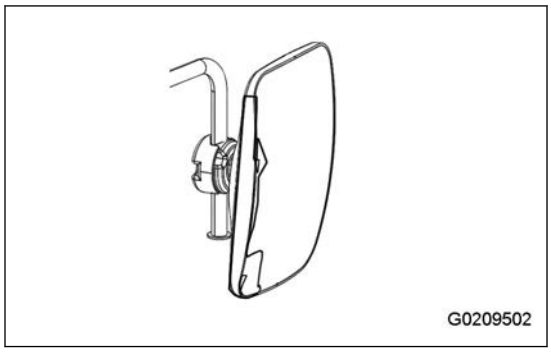

How to Fasten and Unfasten Seat Belt

⚠ WARNING

- **Before fastening the seat belt, check that there is no problem in the belt mounting bracket or belt. If it is worn or damaged, replace it.**
- **Even if no problem can be seen in the belt, replace the seat belt every 3 years from starting usage or 5 years after manufacture whichever comes sooner.**
- **Be sure to use the seat belt during operation.**
- **Do not twist the seat belt when fastening.**

REMARK

- The date of manufacture of the belt is shown on the back of the belt.
- The date indicated on the seat belt is the manufactured date. It is the start of the 5-year period. It is not the start of the 3-year period of actual usage.
- This seat belt has a retractable device, so it is not necessary to adjust the length.

How to Fasten Seat Belt

1. Hold grip (2) and pull out the belt from retractable device (1).
2. Check that the belt is not twisted, and then inset tongue (3) into buckle (4) securely.
3. Pull the belt lightly to check that it is properly locked.

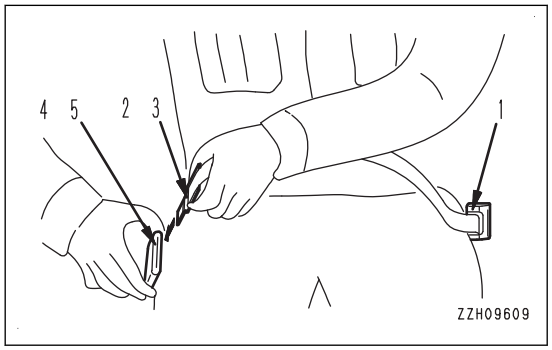

How to Unfasten Seat Belt

Push the button (5) on the buckle (4), and remove the tongue (3) from the buckle (4).
The belt is automatically wound in. Hold the grip (2), and put the belt slowly back to the retractable device (1).

REMARK

If the tongue of the seat belt is not inserted in the buckle, the seatbelt caution lamp is shown at the top left on the machine monitor, the alarm operates, and the revolving lamp comes on. Be sure to fasten the seat belt.
For the seat belt reminder, see “Seat Belt Reminder (3-36)”.

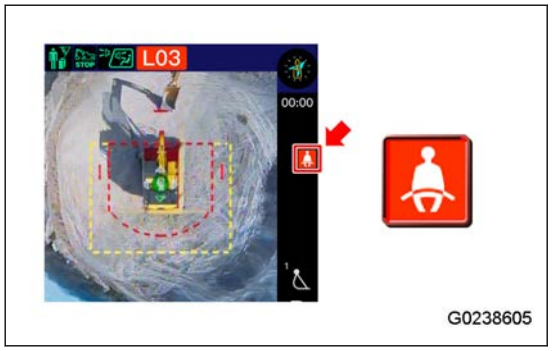

Operations and Checks Before You Start Engine

WARNING

Before you start the engine, make sure that the lock lever is securely in the LOCK position.

Do the operation and check before you start the engine as follows.

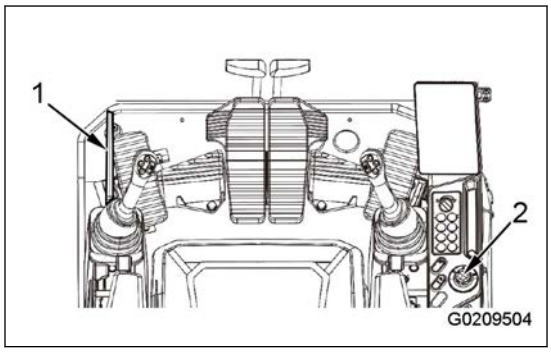

1. Make sure that the battery disconnect switch (S) is in the ON position (I).

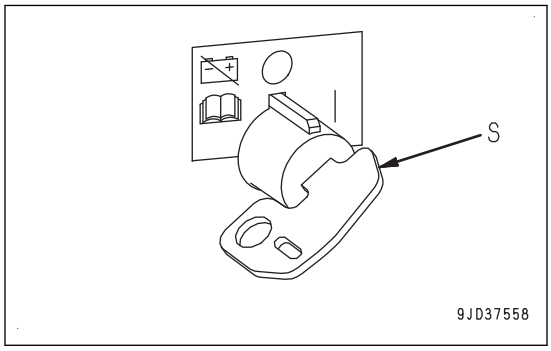

2. Make sure that the lock lever (1) is in the LOCK position (L).
3. Make sure that each control lever and control pedal are in the NEUTRAL position.

   If each control lever and control pedal is not touched, it goes back to the NEUTRAL position.

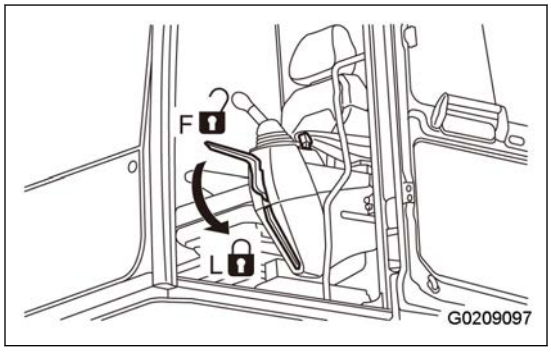

4. Turn the starting switch (2) to the ON position (C), and log on to the system.

   For the log on procedure, see “Basic Operation of Machine Monitor When You Start Engine in Normal Situation (3-10)”.

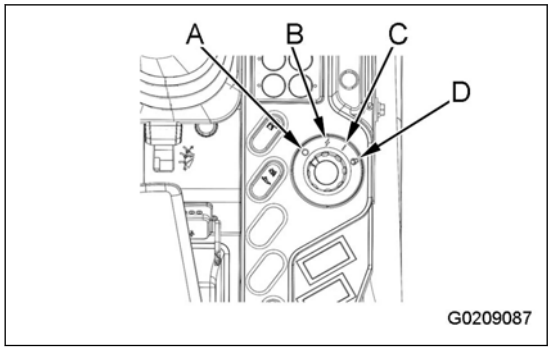

5. If the caution lamp (3) is kept on in red, immediately examine the items with lamps on in red.

   For the contents and check methods for the caution lamp, see “Caution Lamp List (3-19)”.

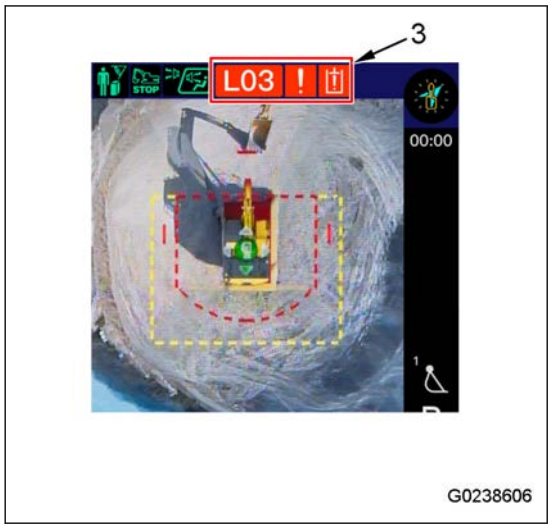

6. If there is an item for which the maintenance time expires, the maintenance time caution lamp (4) comes on in red for 30 seconds, and “menu icon” is highlighted in red. Tap “menu icon” to see the item. Do the maintenance for it immediately.

   For the check method of the maintenance time, see Maintenance Item Screen Setting (3-91) in Explanation of Components.

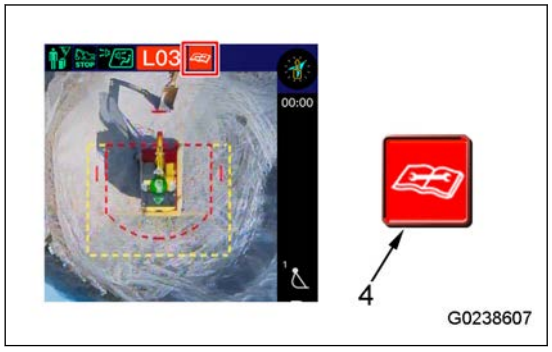

How to Start Engine

⚠ WARNING

- **When you start the engine, be sure to sit on the operator seat.**
- **Do not start the engine by short circuit of the engine starting motor circuit.**
  It can cause serious personal injury, death, or fire.
- **Make sure that there is no person or obstacle in the area around the machine, operate the horn, and then start the engine.**
- **Do not use the starting aid fluid to start the engine as they can cause explosions.**
- **The exhaust gas is poisonous.**
  When you start the engine in confined spaces, be careful to have sufficient ventilation.

NOTICE

- **Before you start the engine, make sure that the fuel control dial (2) is at the low idle (MIN) position. If the fuel control dial is at the High idle (MAX) position, the engine will accelerate suddenly and cause damage to the engine parts.**
- **Do not do start operations continuously.**
- **Do not hold the starting switch (3) at the START position continuously for 20 seconds or more.**
  If the engine cannot start, wait approximately 2 minutes after the engine stops fully. Then, try to start the engine again.
- **After the engine starts, do not touch the control levers or control pedals while the engine oil pressure caution lamp is on.**

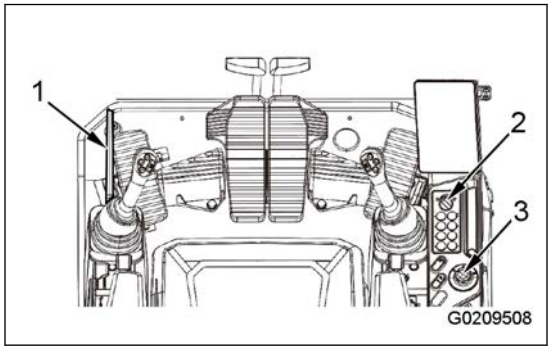

This machine has an engine automatic preheating function (engine automatic preheating system) that preheats the engine automatically.

When the ambient temperature is low, and it becomes possible to start the engine, the preheating icon is highlighted in yellow to show the start of automatic preheating.

Start the engine in the procedure that follows.

1. Make sure that the lock lever (1) is in the LOCK position (L).

   If the lock lever (1) is in the FREE position (F), the engine does not start.

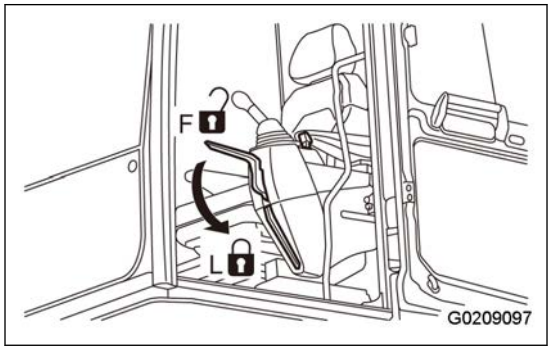

2. Set the fuel control dial (2) to the Low idle (MIN) position.
3. Make the engine ready to start. For details, see “Basic Operation of Machine Monitor When You Start Engine in Normal Situation (3-10)”.

   When the engine is ready to start, the starting switch (3) comes on in green.

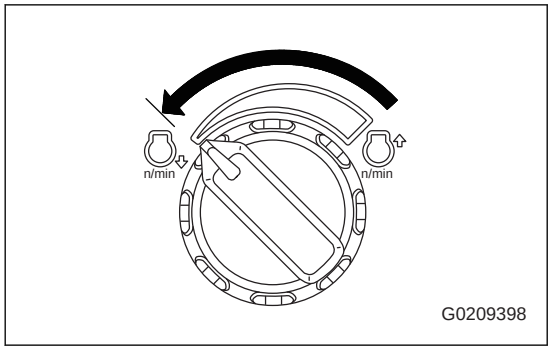

4. Turn the starting switch (3) to the ON position (C).

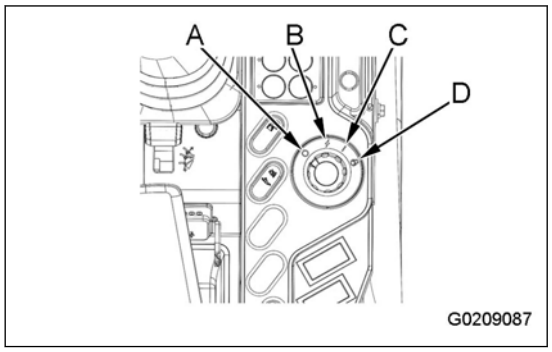

REMARK

When the ambient temperature is low, the preheating icon is highlighted in yellow, and the automatic preheating starts.

Keep the starting switch (3) at the ON position (C) until the preheating icon goes back to the black background.
The preheating time changes by the ambient temperature as shown in the table.

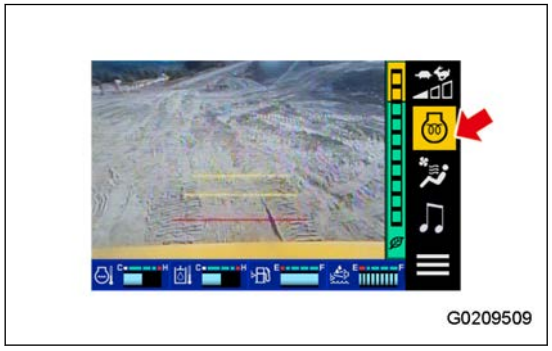

Ambient temperature	Lighting time
-15 ℃ to 0 ℃ {5 ℉ to 32℉}	For 5 to 30 seconds
-15 ℃ {5 ℉} or below	For 30 seconds

If you want to do the preheating by force when the automatic preheating system does not operate, see “How to Do Manual Preheating When You Start Engine (3-235)”.

5. When the preheating icon is not highlighted yellow or engine preheating is completed, turn the starting switch (3) to the START position (D).

   The engine starts.

   REMARK

   - When the ambient temperature is low, the engine cannot be started even when the starting switch (3) is held at the START position (D) for 20 seconds in some cases.
     In such case, wait for 2 minutes, and then do the procedure again from step 4.
   - If the battery voltage is low, the engine possibly does not start.
     In this case, charge the battery, and then do the procedure again from step 1. Even if the engine starts, run the engine at low idle until the battery is charged. Then, turn the starting switch to the OFF position (A) to stop the engine temporarily. Do the procedure again from step 1.

6. After the engine starts, release the starting switch (3). The starting switch naturally turns back to the ON position (C).

   REMARK

   When the engine starts, the battery voltage can decrease suddenly by the temperature and the battery condition. In such case, the machine monitor can go off temporarily and come on again. It is not a problem.

7. Do not touch the control lever and the control pedal while the engine oil pressure caution lamp is on even when the engine starts.

NOTICE

If the engine oil pressure caution lamp does not go off in 4 to 5 seconds, stop the engine immediately. Examine the oil level, oil leakage, or such, and do the necessary procedures.

G0055331

REMARK

White smoke can come out for a short time immediately after the engine starts and during the aftertreatment devices regeneration in cold weather. This is not a problem.

REMARK

The urea SCR system has the function to heat and keep the system warm to prevent freezing of DEF.
If DEF is frozen, the system heats the DEF system automatically to thaw it after the engine starts. The devices do not operate until DEF is thawed and allowed to supply, but it is not a problem.
When the ambient temperature decreases to a level where DEF can freeze while the machine is in operation, the DEF system is kept warm automatically to prevent freezing. When the ambient temperature decreases to a level where freezing of DEF cannot be prevented, the devices stop operation automatically. It is not a problem.
If DEF freezes, the thawing operation starts automatically. Do not heat DEF. A poisonous ammonia gas can come out.

How to Do Manual Preheating When You Start Engine

Regardless of the ambient temperature, you can start the engine preheating manually.

1. Make sure that the engine can be started. For details, see “Basic Operation of Machine Monitor When You Start Engine in Normal Situation (3-10)”.
2. Tap the preheating icon. The preheating icon is highlighted in yellow, and preheating of the engine starts.

   Tap the preheating icon again or continue the preheating for 30 seconds.

   When the preheating is completed, the preheating icon goes back to white.

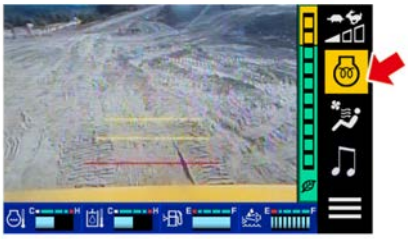

G0209509

3. When the preheating icon goes back to white, turn the starting switch (3) to the START position (D). The engine starts.

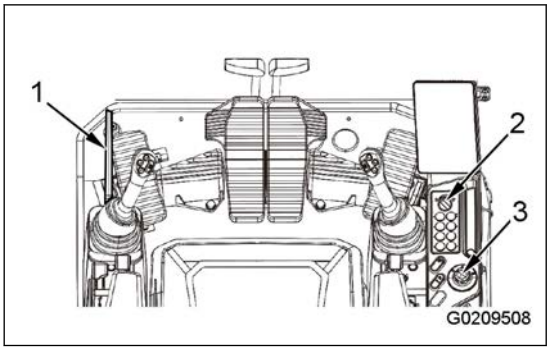

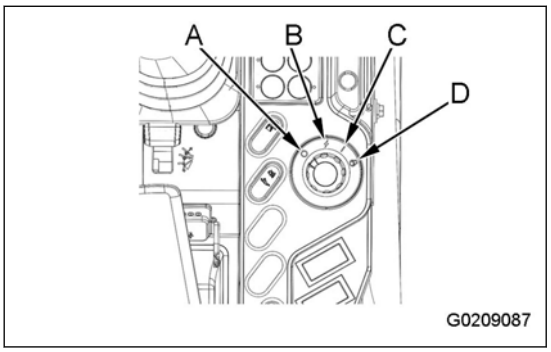

If you cannot start the engine with the procedure above, wait for approximately 2 minutes, and then do the procedure from the step 2 again.

REMARK

After the engine starts, the preheating icon is not shown on the machine monitor.

Turbo Protect Function

The turbo protect function controls the engine speed at low idle or below immediately after the engine is started to protect the turbo.

- When the turbo protect function is activated, the engine speed is held at low idle or below, regardless of the position of the fuel control dial.
- When the turbo protect function is activated, the engine speed is held at low idle or below, even if the fuel control dial is operated.
- When the turbo protect function is canceled, the engine speed is set to the speed for the position of the fuel control dial.
- The activation time of the turbo protect function is limited to 20 seconds.

Operations and Checks After You Start Engine

⚠ WARNING

- **If there are failures such as emergency stop or abnormal operation, turn the starting switch to the OFF position.**
- **Do not operate the machine or operate the lever or pedal suddenly when the hydraulic oil temperature is low. Be sure to do the warm-up operation for the hydraulic components until the hydraulic oil temperature caution lamp shows the correct temperature display.**
- **Be sure to do the warm-up operation for the hydraulic components. Especially in cold weather, do the warm-up operation sufficiently for the hydraulic components. If the work equipment is operated without sufficient warm-up operation for the hydraulic component, there is a possibility that the response of the machine is slow and the machine does not move as control levers and control pedals intended.**
- **Keep a distance from the exhaust pipe of the engine while the engine runs or immediately after the engine stops. Do not let the flammable materials come near the exhaust pipe outlet.**

Warm-up operation has 2 types, one is warm-up operation for engine and the other is for hydraulic component. Also, how to operate the warm-up operation will be different by environmental conditions. Obey the description for each operation to do the engine warm-up operation.

The hydraulic component is not warmed only by the engine warm-up operation. Make sure to do warm-up operation for the hydraulic component separately from the warm-up operation for the engine. The hydraulic oil is warmed by the warm-up operation of the hydraulic components. The warm hydraulic oil is supplied to all the control circuits.

Examine Starting Condition and Unusual Noise of Engine

1. When you start the engine, make sure that no unusual noise comes out and it starts up easily and smoothly.

   In the cases that follow, examine the battery immediately.

   - When the engine is not easy to start
   - When the low battery voltage error occurs

2. Make sure that there is no abnormal noise when the engine is at low idle or when the engine speed is increased.

If there is an abnormal noise, immediately consult your Komatsu distributor for inspection. When there is an abnormal noise and if the engine is kept operated, the engine can have damage.

How to Examine Low-Speed Run and Acceleration of Engine

⚠ CAUTION

- **Perform these checks in a safe place, watching out for danger in the surroundings.**
- **When the engine performs very badly at low idle and in the acceleration and if that condition continues, it may damage the engine or confuse the operator's sense of driving or lower the braking efficiency, and as a result lead to an unexpected accident. In that case, ask your Komatsu distributor to check the engine as soon as possible.**

- When stopping the machine during the normal traveling operation, check that the engine does not hunt or stop suddenly.
- Check that the engine speed rises smoothly when the fuel control dial is turned to High idle (MAX) position.

REMARK

- The smell of the exhaust gas is different from that of the conventional diesel engine because of the exhaust gas filtering function.
- White smoke may be discharged for a short time immediately after the engine is started or during the after-treatment devices regeneration in the cold season, but this is not a failure.

How to Operate Engine in Break-in Period

NOTICE

Your Komatsu machine has been thoroughly adjusted and tested before shipment from the factory. However, operating the machine under full load before breaking the machine in can adversely affect the performance and shorten the machine life.
Be sure to break in the machine for the initial 100 hours (as indicated on the service meter).

Make sure that you fully understand the descriptions in this manual, then run in the machine while paying attention to the following points.

- Run the engine at idle for 15 seconds immediately after starting it up.
  Do not operate the control levers or fuel control dial during this time.
- Perform warm-up operation for 5 minutes after the engine is started.
- Avoid operation with heavy loads or at high speeds.
- Immediately after starting the engine, avoid sudden starts, sudden acceleration, unnecessary sudden stops, and sudden changes in direction of the machine.

Engine Warm-up Operation

NOTICE

- **Do not suddenly accelerate the engine before the warm-up operation is completed.**
- **Do not run the engine at low idle or high idle with no load for 20 minutes or more. This will have a bad effect on the internal structure of the engine in addition to the environment. If it is necessary to run the engine at idle for 20 minutes or more, apply a load from time to time or run it at a medium speed.**

The automatic engine warm-up system is installed to the machine. If the engine coolant temperature is 30 ℃ {86 ℉} or below after the engine starts, the automatic engine warm-up operation starts automatically. When the automatic engine warm-up operation starts, the engine speed is held higher than the normal speed at low idle.

If the engine coolant temperature becomes 30 ℃ {86 ℉} or more, or if the warm-up operation time exceeds 10 minutes, the automatic warm-up operation is canceled and the engine speed decreases to the normal speed at low idle.

Do not travel the machine immediately. Do the operations and checks as follows.

1. Make sure that the engine coolant temperature caution lamp (1) shows the correct temperature.

   If it shows the low temperature display, obey the step 2 to do the optional warm-up operation until it shows the correct temperature display.

   - Display (A) when temperature is correct: Caution lamp background (C) is blue.
   - Display (B) when temperature is low: Caution lamp background (C) is white.

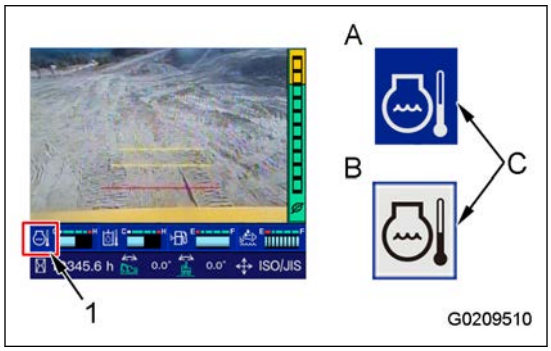

2. Turn the fuel control dial (2) to a middle position between the Low idle (MIN) and High idle (MAX), and run the engine at a medium speed with no load.

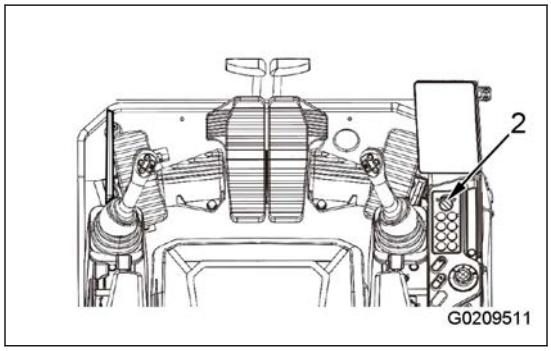

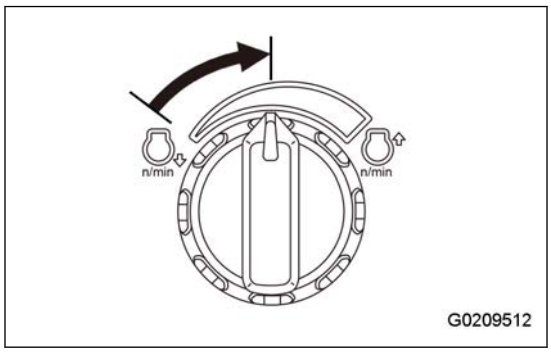

When the engine coolant temperature caution lamp shows the correct temperature display, the engine warm-up operation is completed.

And then, do the warm-up operation for the hydraulic components.

How to Cancel Automatic Engine Warm-up Operation

If you need to cancel the automatic engine warm-up operation in an emergency and lower the engine speed to low idle, obey the procedure that follows.

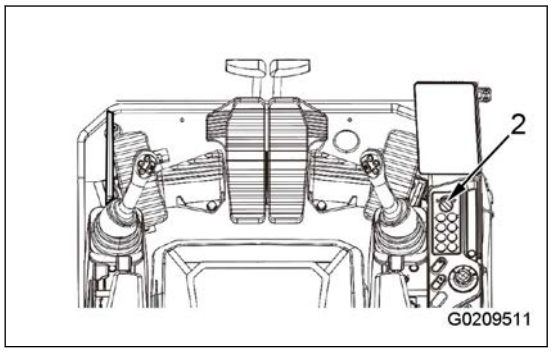

1. Set the fuel control dial (2) to the High idle (MAX) position, and hold it for 3 seconds or more.

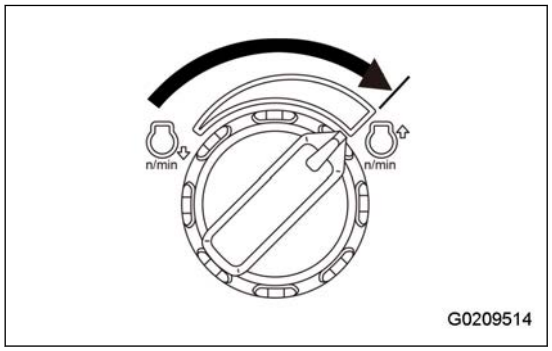

2. Set the fuel control dial (2) to the Low idle (MIN) position.

   The automatic engine warm-up operation is canceled, and the engine speed decreases.

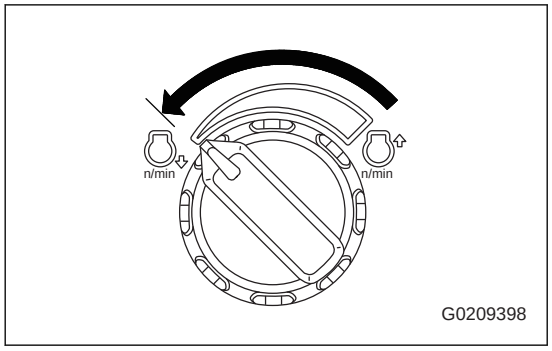

REMARK

The priority is set to the turbo protect function over the engine automatic warm-up operation.
When the turbo protect function activates, the engine runs at low idle even when the engine coolant temperature at startup is 30 ℃ {86 ℉} or less. And then, the automatic engine warm-up operation starts to increase the engine speed.

How to Do Hydraulic System Warm-up Operation

WARNING

- **If you start the hydraulic component warm-up operation manually, set the swing lock switch (1) to the ON position, and make sure that the swing lock is activated on the machine monitor first.**
- **Before you do the hydraulic component warm-up operation, make sure that there is no person or obstacle in the area around the machine, operate the horn, and then start the operation.**
- **Be sure to do the hydraulic component warm-up operation until the hydraulic oil temperature caution lamp shows the correct temperature display. When the hydraulic oil temperature is low, the low temperature display is as shown in the figure.**
  - **Display (A) when temperature is correct: Caution lamp background (C) is blue.**
  - **Display (B) when temperature is low: Caution lamp background (C) is white**
- **The hydraulic component warm-up operation is necessary not only for the circuit between the pump and cylinders, and the circuit between the pump and motor, but also for the control circuits. Do the operation in all directions for the work equipment (boom, arm, and bucket), swing, travel, and attachment (if equipped). It is not sufficient if the operation is done just for one cylinder or motor, or the operation just in one direction.**
- **Make sure that the direction of the track frame is set correctly before you operate the travel control.**

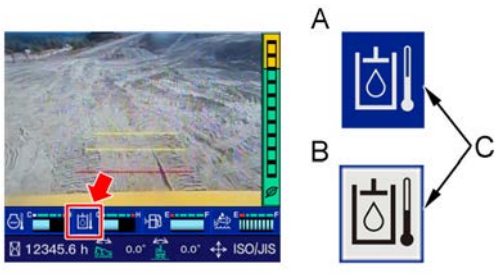

G0209515

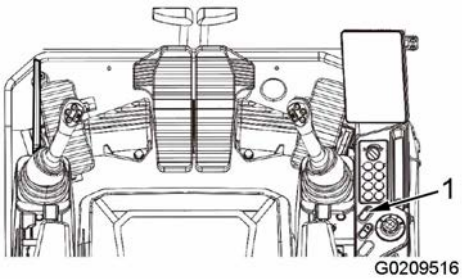

G0209516

Machine Warm-up System

This machine has the machine warm-up system.

1. Before you start a machine warm-up operation, operate the operating part (g) of the lock lever to set it to the LOCK position. Set the fuel control dial to the low idle (MIN) position.

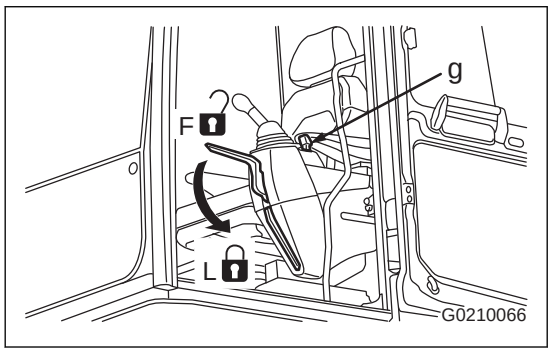

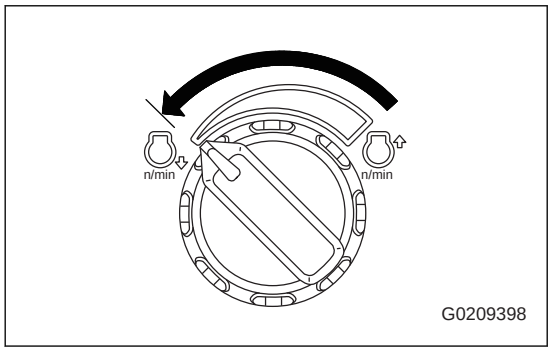

2. When the machine warm-up system is on, the screen in the figure is shown on the machine monitor when the hydraulic oil temperature requires warm-up. The machine warm-up starts when the checkmark button is tapped.

REMARK

- For the settings of the machine warm-up system, see “Machine Warm-up Setting (3-66)”.
- If the engine warm-up is not sufficient, the engine automatic warm-up operation starts before the machine warm-up operation.
- The confirmation screen is not shown in the cases that follow, and the machine warm-up cannot be started.
  - When the machine warm-up setting is OFF
  - When the hydraulic oil temperature is high
  - When lock lever is set to FREE position (F)
  - When the fuel control dial is not set to the low idle (MIN) position
  - When the engine is in operation with other functions, such as manual stationary regeneration
  - When a function that stops the engine, such as delayed engine shutdown, is in operation

3. When the machine warm-up is completed, the screen in the figure is shown. Tap the checkmark button, and stop the machine warm-up.

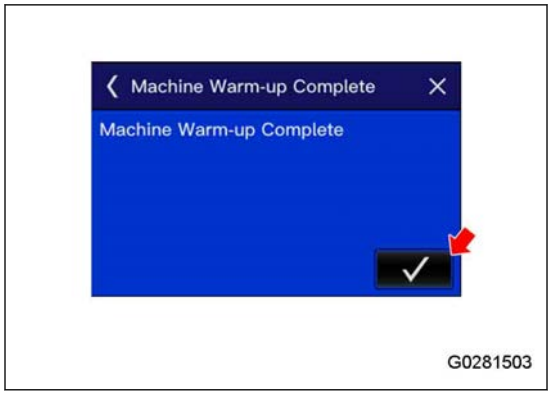

How to Cancel Machine Warm-up

If you want to stop the machine warm-up, you can stop by one of the methods (a) to (c) that follow.

(a) When the fuel control dial is set to a position other than MIN, the machine warm-up operation stops.

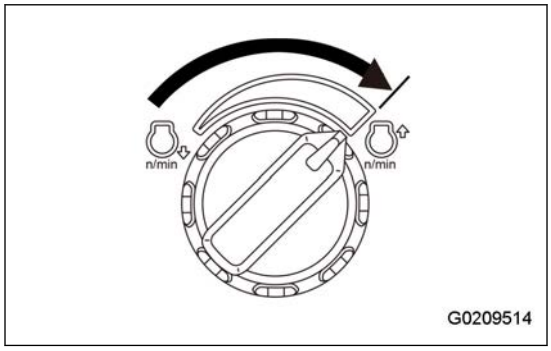

(b) When the operating part (g) of the lock lever is set to the FREE position (F), the machine warm-up operation stops.

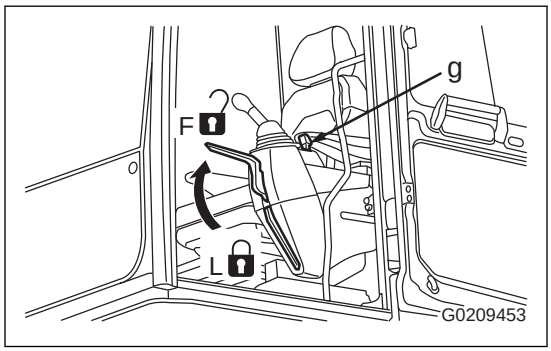

(c) Tap the RETURN button while the “Machine warm-up in progress” message on the machine monitor is shown. If you tap the RETURN button, the confirmation message is shown. When you tap the checkmark button, the machine warm-up operation stops.

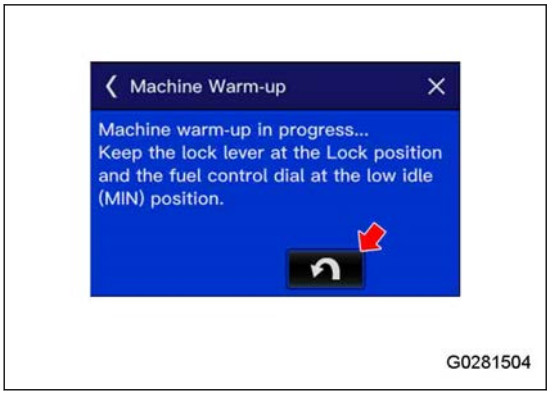

Manual Machine Warm-up Operation

1. Make sure that the engine coolant temperature caution lamp (1) shows the correct temperature display.
   - Display (A) when temperature is correct: Caution lamp background (C) is blue.
   - Display (B) when temperature is low: Caution lamp background (C) is white.

   If the engine coolant temperature caution lamp (1) shows the low temperature display, do the engine warm-up operation until the correct temperature display is shown.

   For the engine warm-up operation, see “Engine Warm-up Operation (3-239)”.

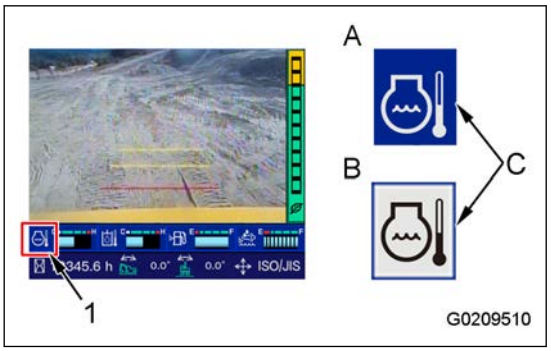

2. Set the swing lock switch to the ON position, and make sure that the swing lock indicator is on.

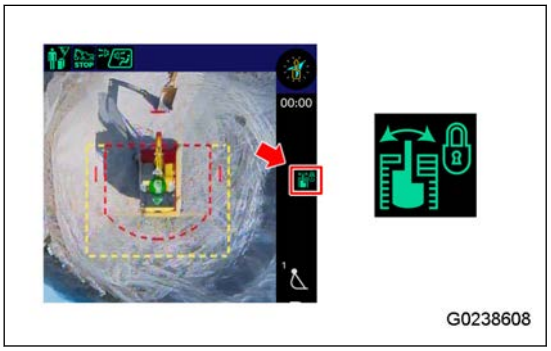

3. Set the working mode to the P+ mode.

   The warm-up of the hydraulic equipment can be accelerated.

   For the working mode setting, see “Working Mode Icon (3-42)”.

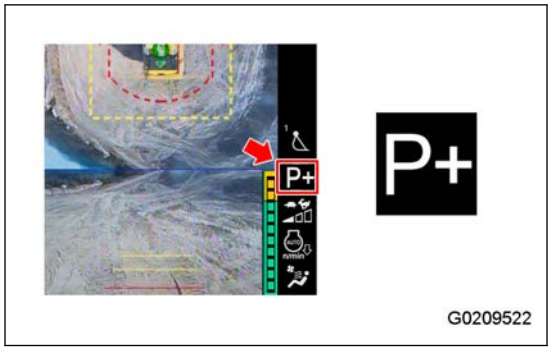

4. Operate the operating part (g) of the lock lever slowly and securely to set it to the FREE position (F), and raise the bucket from the ground.

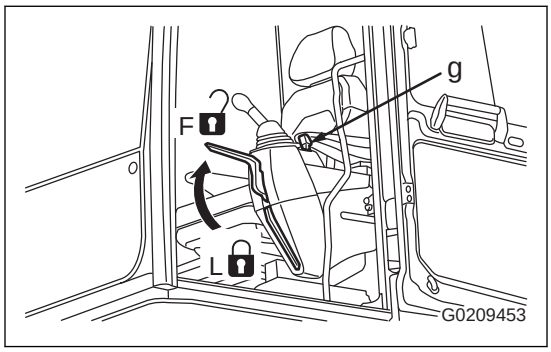

5. Turn the fuel control dial to a point of 2/3 between the Low idle (MIN) position and the High idle (MAX) position.
6. Operate the work equipment to do the hydraulic components warm-up operation.

   NOTICE

   When you operate the work equipment, be careful not to let it interfere with the machine or ground.

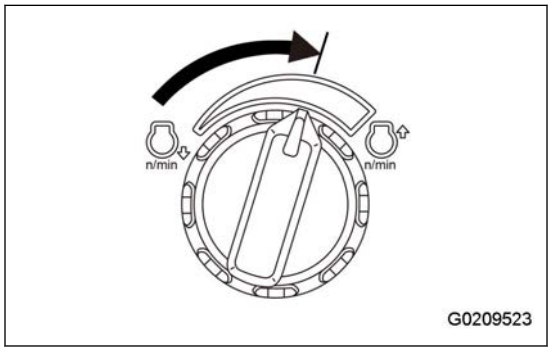

   1) Move the bucket slowly to the CURL side (A) until it reaches the stroke end position. Hold it in the position for 30 seconds.
   2) Move the bucket slowly to the DUMP side (B) until it reaches the stroke end position. Hold it in the position for 30 seconds.

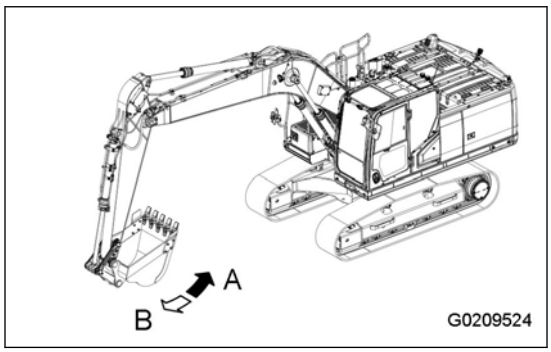

   3) Move the arm slowly to the IN side (C) until it reaches the stroke end position. Hold it in the position for 30 seconds.
   4) Move the arm slowly to the OUT side (D) until it reaches the stroke end position. Hold it in the position for 30 seconds.

   REMARK

   For how to operate the work equipment, see “Work Equipment Control Lever (3-146)”.

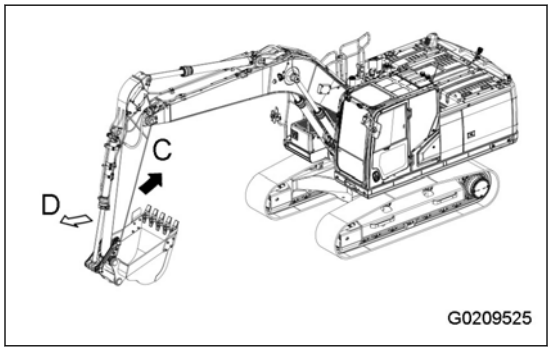

7. Continue the operation of the step 6 for 5 minutes.

8. Make sure that the hydraulic oil temperature caution lamp (2) shows the correct temperature display.

   If the hydraulic oil temperature caution lamp does not show the correct temperature (it shows the low temperature), continue the steps 6 to 7 until it shows the correct temperature.

   - Display (A) when temperature is correct: Caution lamp background (C) is blue.
   - Display (B) when temperature is low: Caution lamp background (C) is white.

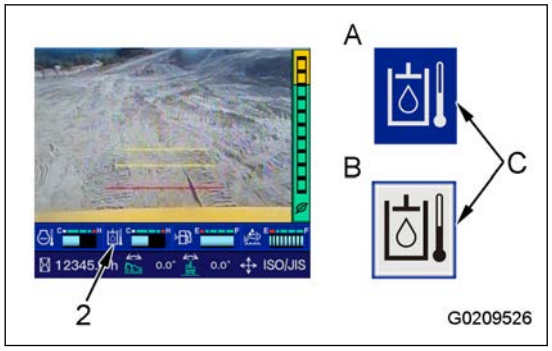

9. Make sure that the engine coolant temperature caution lamp (1) shows the correct temperature display.

   - Display (A) when temperature is correct: Caution lamp background (C) is blue.
   - Display (B) when temperature is low: Caution lamp background (C) is white.

   If it shows the low temperature display, do the warm-up operation for the engine until the engine coolant temperature caution lamp (1) shows the correct temperature display.

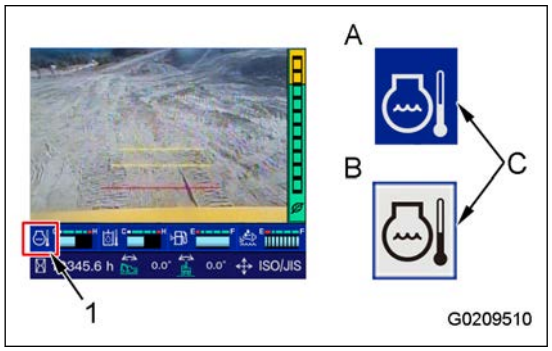

10. Make sure that the hydraulic oil temperature caution lamp (2) and the engine coolant temperature caution lamp (1) show the correct temperature, and then make sure that all the instruments, caution lamps, and indicators on the machine monitor are in the conditions that follow.

    - Radiator coolant level caution lamp (3): OFF
    - Engine oil level caution lamp (4): OFF
    - Air cleaner clogging caution lamp (5): OFF
    - Charge level caution lamp (6): OFF
    - Engine oil pressure caution lamp (7): OFF
    - Water separator caution lamp (8): OFF
    - DEF level caution lamp (9): OFF
    - Engine coolant temperature gauge (10): The gauge is in the green range.
    - Engine coolant temperature caution lamp (1): Shows the correct temperature.
    - Hydraulic oil temperature gauge (11): The gauge is in the green range.
    - Hydraulic oil temperature caution lamp (2): Shows the correct temperature.
    - Fuel level caution lamp (12): Shows the correct level.
    - Fuel gauge (13): The gauge is in the green range.

11. Make sure that there is no abnormal exhaust color, noise, or vibration.

    If a problem is found, consult your Komatsu distributor.

NOTICE

Do the hydraulic component warm-up operation to warm-up all the hydraulic component in cold weather (ambient temperature below 0 ℃ {32 ℉}) even when the hydraulic oil temperature caution lamp shows the correct temperature.

12. Hydraulic component warm-up operation in cold weather

1) Turn the fuel control dial to the High idle (MAX) position.
2) Continue the work equipment operation of the step 6 for 3 to 5 minutes.

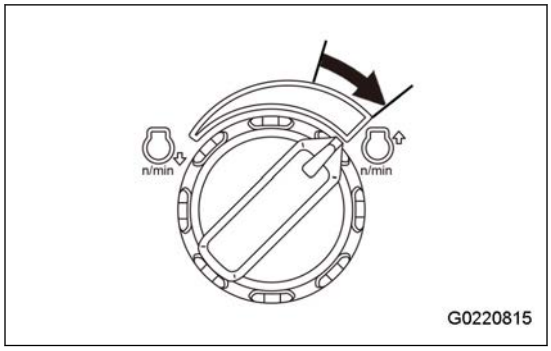

3) Make sure that the hydraulic oil temperature caution lamp shows the correct temperature display.
   - Display (A) when temperature is correct: Caution lamp background (C) is blue.
   - Display (B) when temperature is low: Caution lamp background (C) is white.

   If the hydraulic oil temperature caution lamp (2) shows the low temperature, continue the step 2) until the lamp shows the correct temperature.

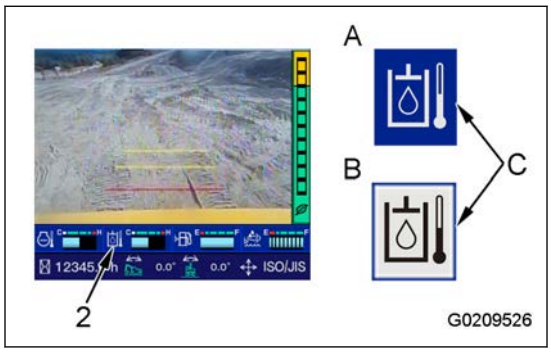

13. Before you start the work, make sure that the fuel control dial is at a point of 2/3 between the Low idle (MIN) position and High idle (MAX) position.

    If it is not set at a point of 2/3, set it to a middle point to operate the engine at 2/3 of the speed before the operation.
14. Continue the operations that follow slowly 3 to 5 times before you start the operation.

    Supply warm hydraulic oil through all control circuits.

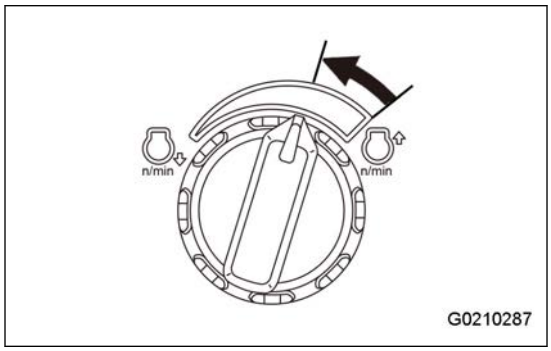

- Bucket operation: CURL (A) ←→ DUMP (B)

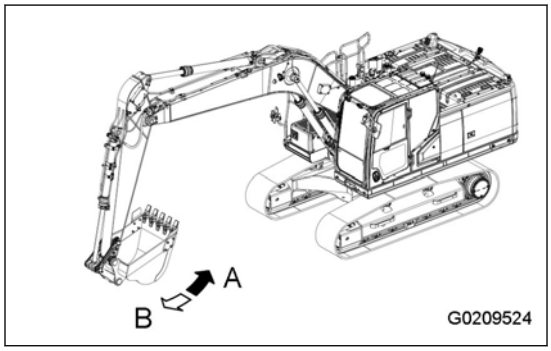

- Arm operation: IN (C) ←→ OUT (D)

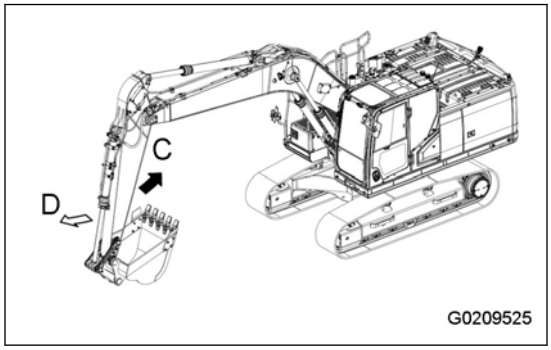

- Boom operation: RAISE (E) ←→ LOWER (F)

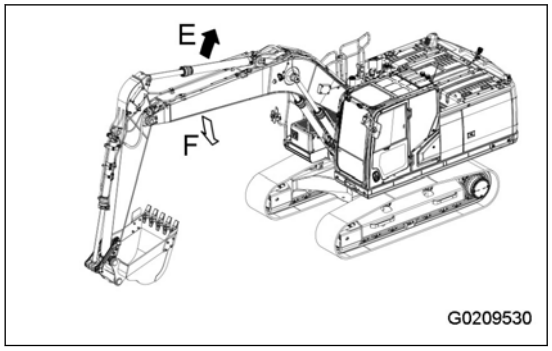

- Swing operation: LEFT (G) ←→ RIGHT (H)

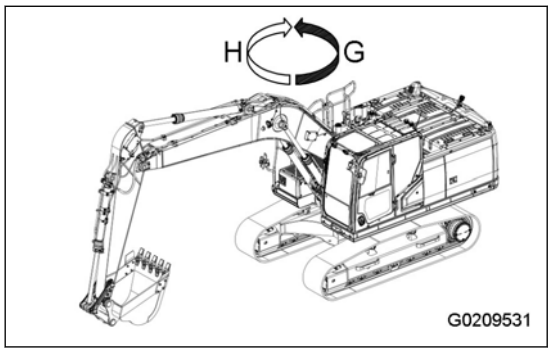

Release the swing lock switch and make sure that the swing lock indicator is off before the swing operation.

REMARK

For the operation method, see “Work Equipment Control Lever (3-146)”.
For how to operate the work equipment, see “Work Equipment Control Lever (3-146)”.

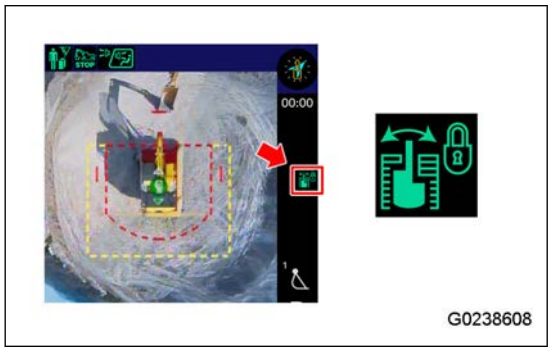

- Travel (Lo) operation: FORWARD (A) ←→ REVERSE (B)

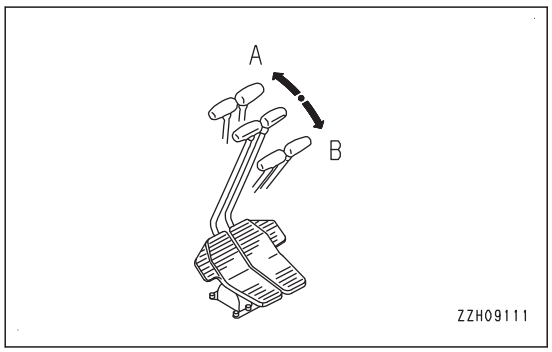

- Before you operate the attachment, make sure that the attachment icon agrees with the attachment installed on the machine.

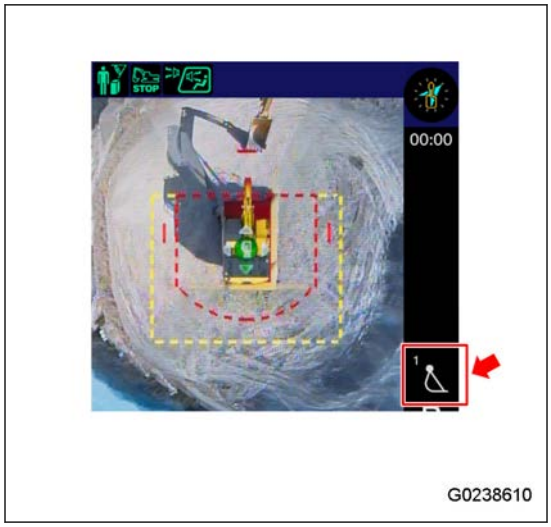

Attachment operation: One way (A) ←→ Other way (B)

REMARK

If the attachment operation is given to a work equipment control lever switch, you can also operate the attachment with the work equipment control lever.
For the work equipment lever switch allocation, see “Lever Switch Assignment (3-58)”.

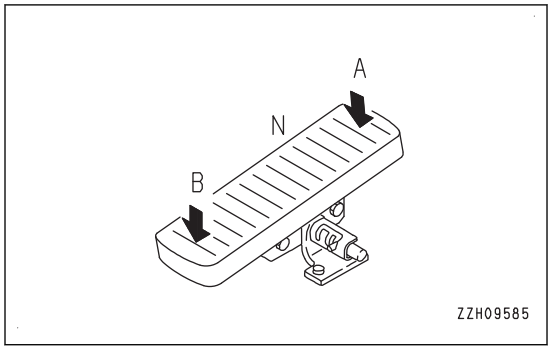

15. Make sure that the hydraulic oil temperature caution lamp (2) shows the correct temperature display.

    If the hydraulic oil temperature caution lamp does not show the correct temperature (it shows the low temperature), continue the steps 6 to 7 until it shows the correct temperature.

    - Display (A) when temperature is correct: Caution lamp background (C) is blue.
    - Display (B) when temperature is low: Caution lamp background (C) is white.

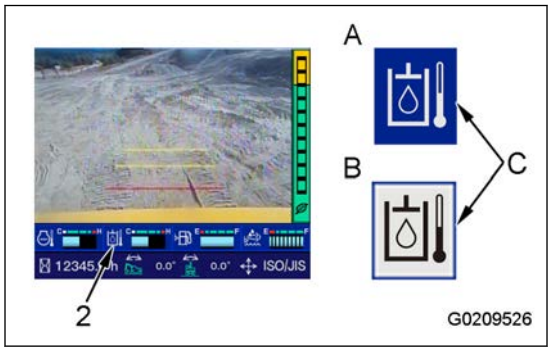

When the hydraulic oil temperature caution lamp shows the correct temperature display, the hydraulic component warm-up operation is completed.

Make sure that the hydraulic oil temperature caution lamp shows the correct temperature display, and then do the operation to be done after the warm-up operation is completed.

Air Conditioner Warm-up Operation

NOTICE

To prevent the failure of the air conditioner compressor, do the warm-up operation of the air conditioner one time a day when you use the air conditioner for the first time. If you turn on the air conditioner while the engine runs at high speed, the excessive load is applied to the air conditioner compressor, and it can cause the seizure in the air conditioner compressor.

When you operate the machine while the auto switch or the air conditioner switch is turned on, use the air conditioner under conditions that follow for 3 minutes after the air conditioner starts.

1. Set the fuel control dial as shown in the figure (at the 1/4 position between the low idle (MIN) and high idle (MAX) position).
2. Set the temperature to 18.0 ℃ {64.4℉}, set the air flow rate to the maximum, and continue the operation for 3 minutes.

   The air conditioner compressor starts up securely, and the warm-up operation of the air conditioner is done.

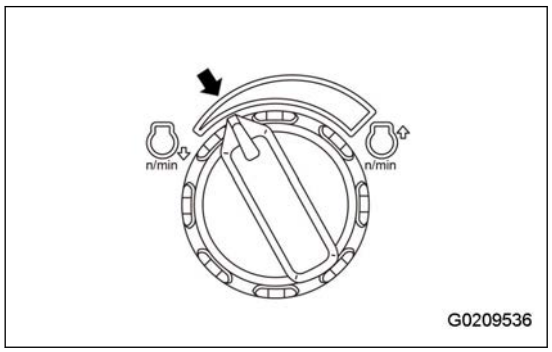

How to Operate Machine After Warm-up Operation

1. Make sure that the hydraulic oil temperature caution lamp (7) shows the correct temperature display.
   - Display (A) when temperature is correct: Caution lamp background (C) is blue.
   - Display (B) when temperature is low: Caution lamp background (C) is white.

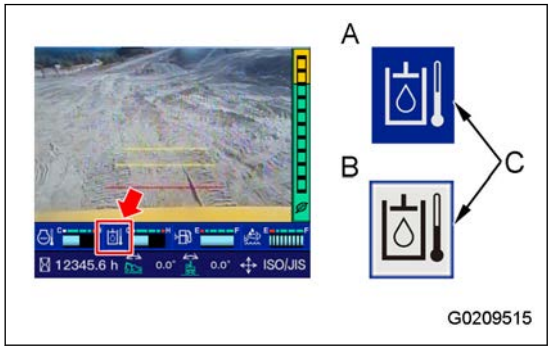

2. Tap the working mode icon (20) on the machine monitor to change to the working mode to be used.

   To change the working mode, see “How to Operate Work Mode (3-271)”.

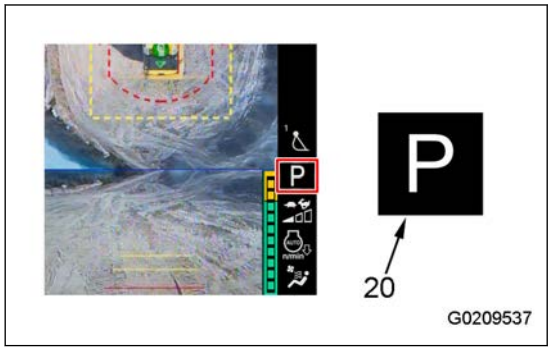

How to Stop Engine

WARNING

Keep a distance from the exhaust pipe immediately after the engine stops.

NOTICE

Do not stop the engine suddenly unless in an emergency. If you stop the engine suddenly, the service lives of component parts of the engine will be reduced.
If the engine is overheated, do not try to stop it suddenly but run it at medium speed to allow it to cool down gradually, and then stop it.
If the engine stops during the aftertreatment devices regeneration, the components can have damage.
Before you stop the engine, stop the aftertreatment devices regeneration, and run the engine at low idle for approximately 5 minutes. And then, stop the engine.
When you start the engine again after you turn the starting switch to the ACC position or OFF position, do not turn the starting switch to the START position until the engine fully stops.

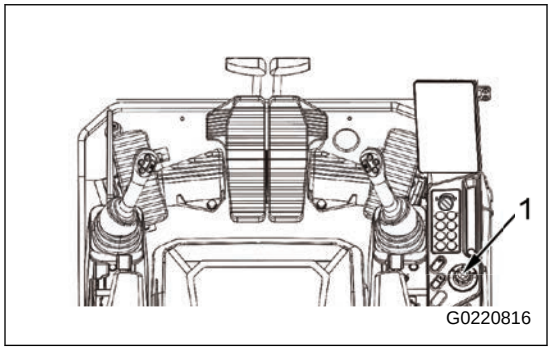

Stop the engine as follows.

1. Operate the operating part (g) of the lock lever to set it to the LOCK position (L).
2. Run the engine at low idle for 5 minutes to let the engine cool down gradually.

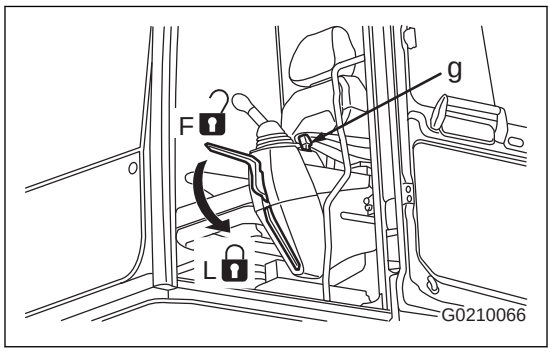

3. Turn the starting switch (1) to the ACC position (B), and stop the engine.
4. Turn the starting switch (1) to the OFF position (A), and shut down the system.
5. When the operator ID setting or operator ID authentication setting is OFF, set the battery disconnect switch to the OFF position and lock it. For the procedure to lock the battery disconnect, see “Operate Battery Disconnect Switch (3-170)”.

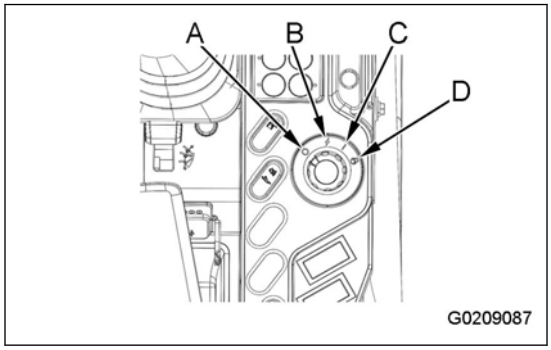

REMARK

- The delayed engine shutdown system is installed to this machine. Even if you turn the starting switch to the ACC position (B) or OFF position (A) in the step 3, the engine cannot stop immediately in some cases.
  In this case, if a control lever is operated, the machine can move. When you operate the starting switch, be sure to examine the machine monitor.
- For details of the delayed engine shutdown system, see “Delayed Engine Shutdown System (3-252)”.
- The machine power will not turn off immediately even if the starting switch is turned to the OFF position (A).
  This is because the power is supplied for the controller to save the operating condition and then complete the system. The time to keep the power is different by the operating condition.
- Even when the starting switch is turned to the OFF position (A), if the starting switch is turned again to the ACC position (B) in the operator ID holding time, the operator authentication is skipped, and work can be done. For the setting of the operator ID holding time, see “Set Operator ID Holding Time (3-110)”.
- After the engine stops, DEF in the DEF injector and pump is automatically purged and goes back to the tank to prevent malfunction of the devices caused by freezing of DEF or deposition of urea.
  As a result, the devices operate for maximum 7 minutes after the starting switch (1) is turned to the OFF position (A). This is not a problem.
  In addition, the system operating lamp comes on while the devices are operated to purge DEF. Do not set the battery disconnect switch to the OFF position while the system operating lamp is on. After DEF is fully purged, the devices stop automatically.

Delayed Engine Shutdown System

⚠ WARNING

While the delayed engine shutdown system is in operation, the engine is not stopped. If you operate a lever, the machine can move suddenly. Do not operate the levers while the delayed engine shutdown system is in operation.

Delayed engine shutdown system is a system that stops the engine automatically after cooling at idle to protect the engine when it is hot.

NOTICE

If the engine stops while the delayed engine shutdown system is in operation, it can decrease the service life of each part of the engine. While the delayed engine shutdown system is in operation, stop the engine in an emergency.

When the engine is hot, the delayed engine shutdown system operates, and the engine does not stop immediately after you turn the starting switch to the ACC or OFF position.

You can turn the delayed engine shutdown system on and off, and change the setting of the operation time. For the setting of the delayed engine shutdown system, see “Delayed Engine Shutdown Setting (3-65)”.

While the delayed engine shutdown system is activated, the indication in the figure is shown on the machine monitor. When the delayed engine shutdown system operation is completed, the engine stops.

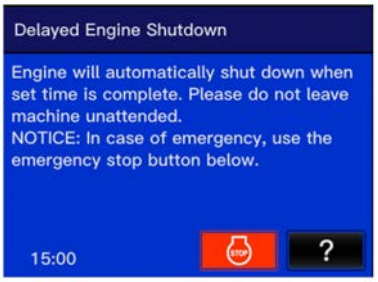

G0228918

The display on the machine monitor after the engine stops is different by the position of the starting switch (3).

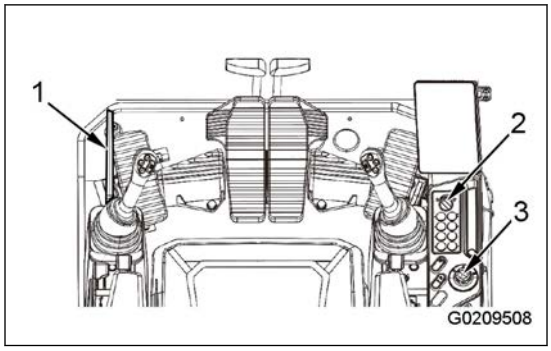

When the starting switch (3) is in the OFF position (A)

After the engine stops, the machine monitor goes off. To start the engine again, see “How to Start Engine (3-233)”.

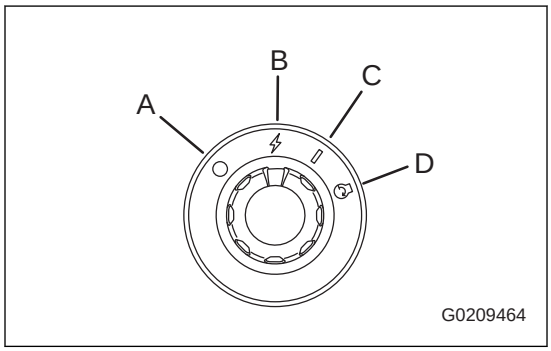

When the starting switch (3) is in the ACC position (B)

An indication in the figure is shown on the machine monitor.

After 3 seconds, the standard screen is shown on the machine monitor. If you start the engine again, turn the starting switch (3) to the START position (D).

NOTICE

If you move from the machine while the starting switch (3) is in the ACC position (B) and the delayed engine shutdown system is in operation, there is a danger of battery drainage or theft of the machine.

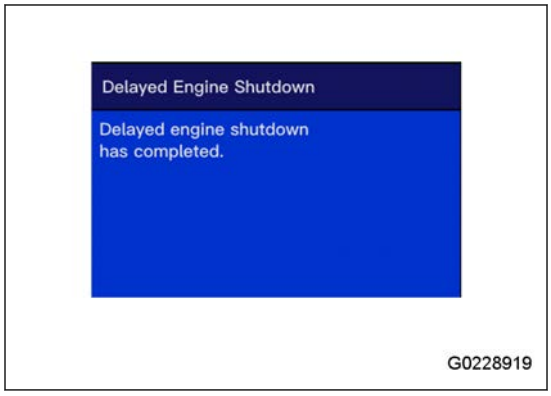

How to Force Stop the Engine While the Delayed Engine Shutdown System is in Operation

The engine can be force-stopped as follows, even when the delayed engine shutdown system is in operation.

1. Tap the emergency stop button. The confirmation screen is shown.

2. Tap the checkmark button on the confirmation screen to stop the engine.

G0228921

How to Stop the Operation of the Delayed Engine Shutdown System and Start the Work Again

If the delayed engine shutdown system is in operation when the starting switch (3) is in the ACC position (B), you can stop the operation of the delayed engine shutdown system and start the work again as follows.

1. Turn the starting switch (3) to the ON position (C).
2. The operation of the delayed engine shutdown system stops.

   After 3 seconds, the standard screen is shown on the machine monitor, and you can start the work again.

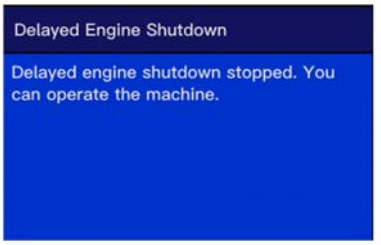

G0228922

How to Start Machine (Travel FORWARD and REVERSE) and Stop Machine

⚠ WARNING

- **Before you operate the travel levers or travel pedals, make sure that the travel direction of the track frame is correct.**
  When the track frame is set to the rear side (sprocket is at the front), the operation direction of the travel levers or travel pedals are the opposite to the travel direction of the machine (forward/reverse, right/left turn).
  You can see the direction of the track frame with the bird's-eye view icon. For the direction of the track frame, see "Travel Heading Indicator (3-44)".
- **Make sure that the area around the machine is safe and operate the horn before you move off the machine.**
- **Keep persons apart from around the machine.**
- **Remove the obstacles from the travel path.**
- **If the auto-deceleration is activated, operate the travel lever and travel pedal carefully. If you operate the travel lever and travel pedal when the engine speed decreases by the auto-deceleration function, the engine speed will suddenly increase.**
- **Make sure that the travel alarm operates normally during the travel.**
- **See the camera image on the machine monitor before you travel in reverse.**

When you make a travel operation, the machine monitor automatically changes to the standard screen.

Prepare to Move Machine

Obey the procedure that follows and do preparation to move the machine.

1. Set the swing lock switch (1) to ON (activated), and make sure that the swing lock indicator (2) is on.

   (a): ON position

   (b): OFF position

2. Look at the direction of the track frame with the bird's-eye view icon (3).

   For the direction of the track frame, see "Travel Heading Indicator (3-44)".

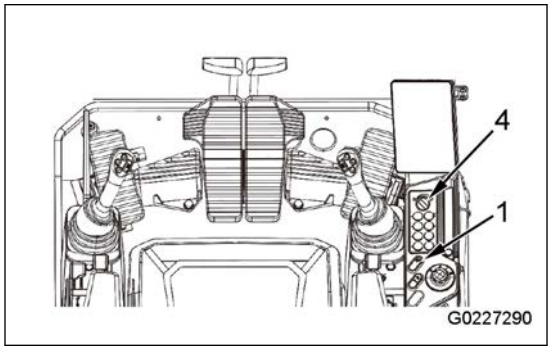

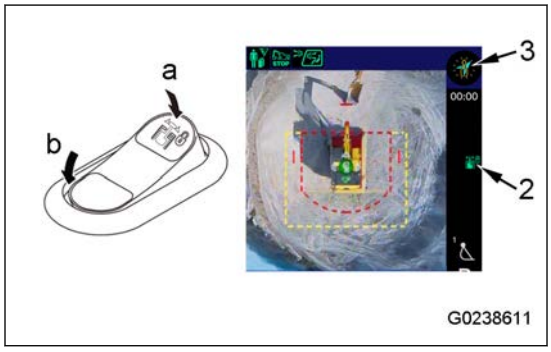

3. Turn the fuel control dial (4) to the maximum rotation (MAX) position

   Increase the engine speed.

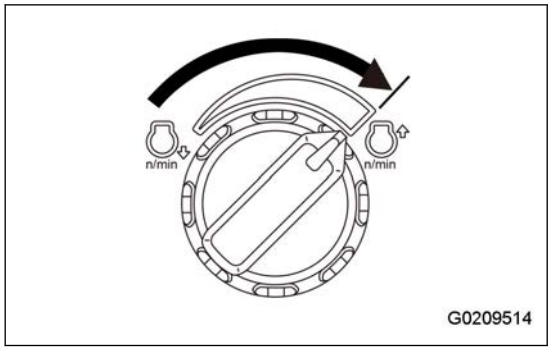

How to Travel FORWARD

1. Operate the operating part (g) of the lock lever to set it to the FREE position (F).

   Set the work equipment to the travel posture and raise it to the height (c) of 40 to 50 cm {15.7 to 19.7 in} above the ground.

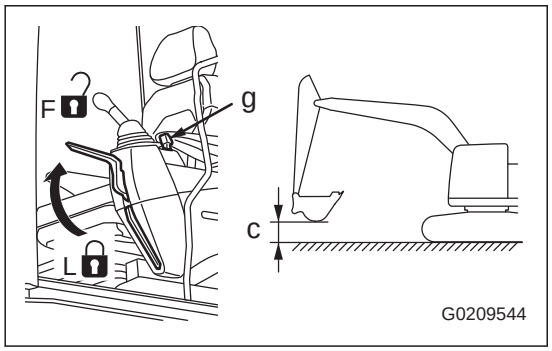

2. Operate the right and left travel levers (1) or the travel pedals (2) as follows.

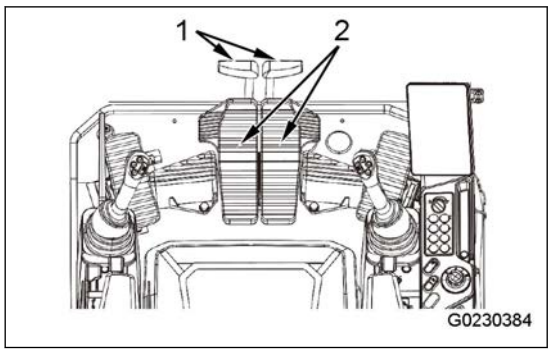

- When the sprocket (A) is at the rear of the machine

  Push the right and left travel levers (1) forward slowly or push the front part of the travel pedals (2) slowly to move the machine.

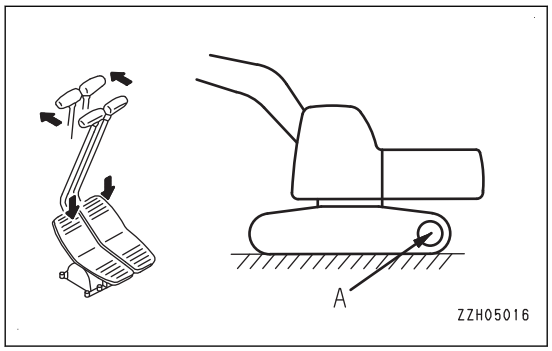

- When the sprocket (A) is at the front of the machine

  Pull the right and left travel levers (1) to your side slowly or push the rear part of the travel pedals (2) slowly to move the machine.

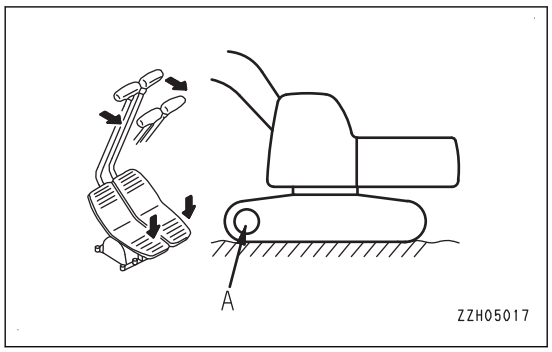

3. Make sure that the travel alarm operates normally during the travel.

   If the travel alarm does not operate, consult your Komatsu distributor for repair.

REMARK

- At low temperature, if the machine travel speed is not normal, do the warm-up operation fully.
- If the undercarriage is packed with mud and the machine travel speed is not normal, remove the soil and mud from the undercarriage.

How to Travel REVERSE

1. Operate the operating part (g) of the lock lever to set it to the FREE position (F).

   Set the work equipment to the travel posture and raise it to the height (c) of 40 to 50 cm {15.7 to 19.7 in} above the ground.

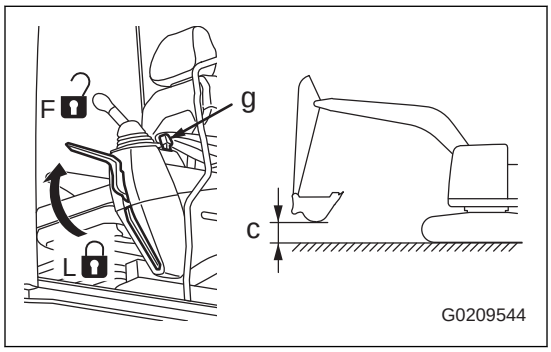

2. Operate the right and left travel levers (1) or the travel pedal (2) as follows.

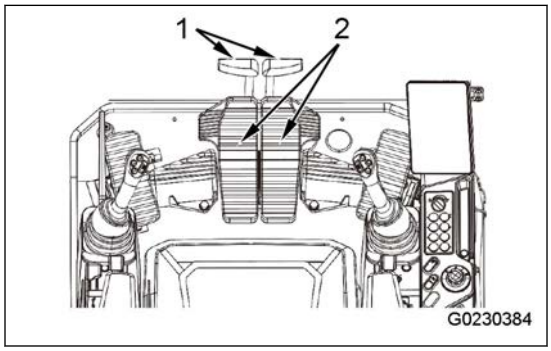

   - When the sprocket (A) is at the rear of the machine

     Pull the R.H. and L.H. travel levers (1) to your side slowly or push the rear part of the travel pedal (2) slowly to move the machine.

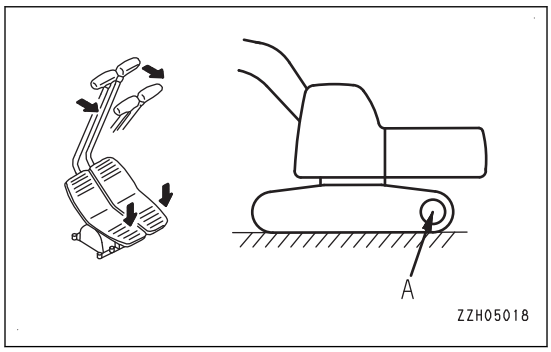

   - When the sprocket (A) is at the front of the machine

     Push the R.H. and L.H. travel levers (1) forward slowly or push the front part of the travel pedal (2) slowly to move the machine.

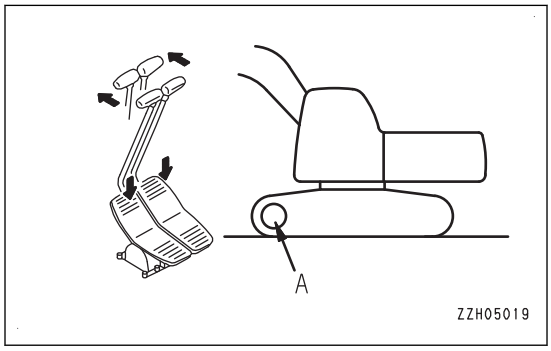

3. Make sure that the travel alarm operates normally during the travel.

   If the travel alarm does not operate, consult your Komatsu distributor for repair.

REMARK

- At low temperature, if the machine travel speed is not normal, do the warm-up operation fully.
- If the undercarriage is packed with mud and the machine travel speed is not normal, remove the soil and mud from the undercarriage.

How to Stop Machine

Avoid a sudden stop. Stop the machine gradually.

Set the R.H. and L.H. travel levers (1) in the NEUTRAL (N) position.
The machine stops.

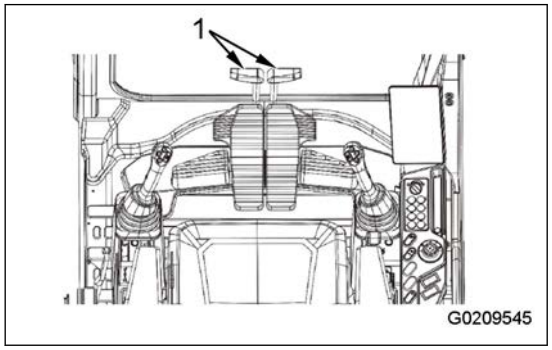

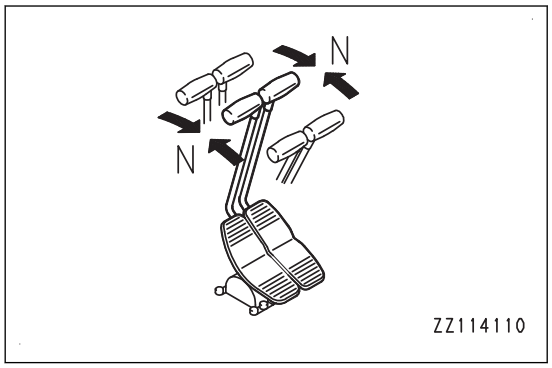

Steer Machine

How to Steer Machine (Change Direction)

⚠ WARNING

Before you operate the travel levers or travel pedals, make sure that the travel direction of the track frame is correct. When the track frame is set to the rear side (sprocket is at the front), the operation direction of the travel levers or travel pedals are the opposite to the travel direction of the machine (forward/reverse, right/left turn).

Use the travel levers to change direction.

Avoid sudden changes of direction to travel as much as possible. When you do the counter-rotation turn (spin turn), stop the machine temporarily.

Operate the right and left travel levers (1) as follows.

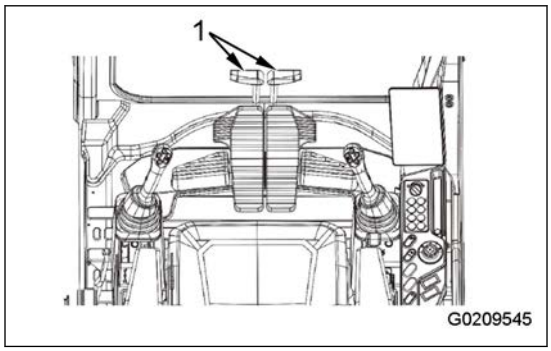

Operation to Change Direction of Stopped Machine

- To turn left in forward travel, push the right travel lever forward.
- To turn left in reverse travel, push the right travel lever rearward.
  (A): FORWARD left turn
  (B): REVERSE left turn

  REMARK

  To turn right, operate the L.H. travel lever in the same procedure.

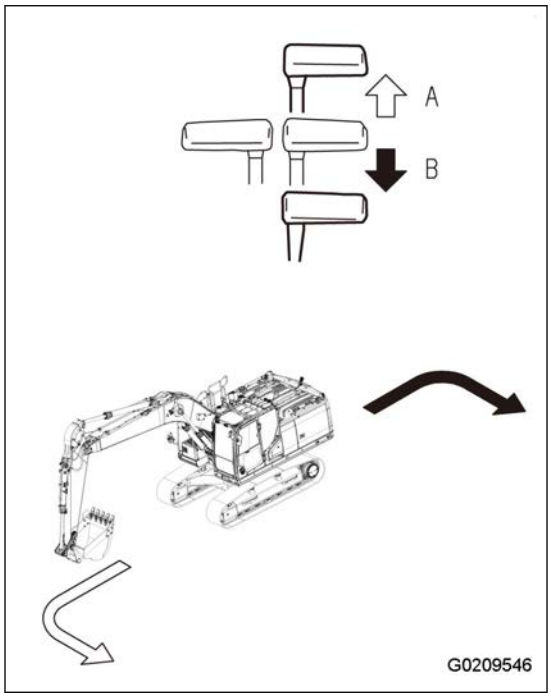

Operation to Change Direction of Machine Which is Moving Forward

To turn left, move the left travel lever back to the NEUTRAL position.
(A): FORWARD left turn

(B): REVERSE left turn

REMARK

To turn right, operate the R.H. travel lever in the same procedure.

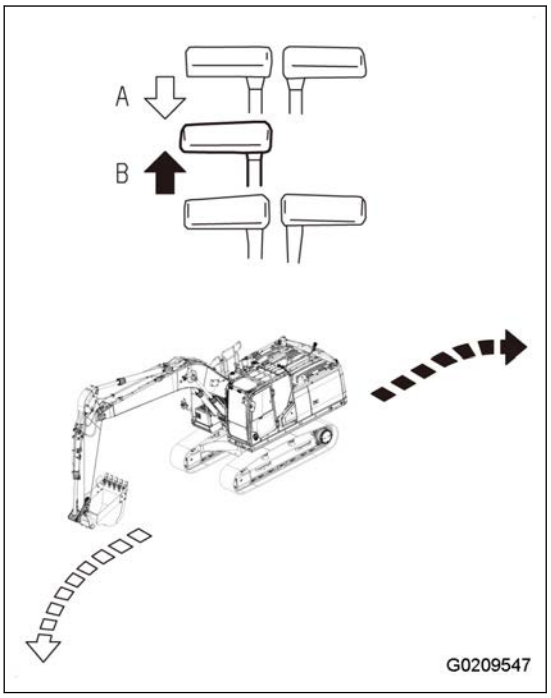

Operation to Do Counter-Rotation Turn on Site

To do the counter-rotation turn to the left, pull the left travel lever to your side, and push the right travel lever forward.

REMARK

To do the counter-rotation turn to the right, pull the right travel lever to your side, and push the left travel lever forward.

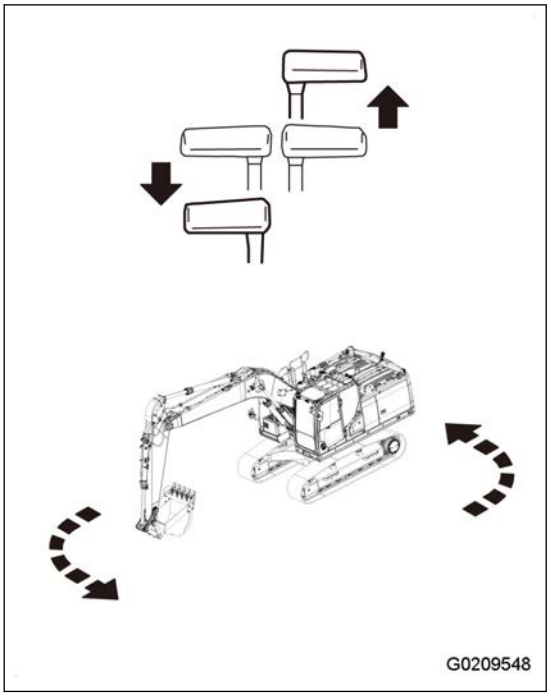

Track Control

⚠ WARNING

- **Before you make a travel operation with the work equipment control lever wheel, make sure that the direction of the track frame is correct.**
  If the track frame is pointed to the rear side (the sprocket is at the front), the machine moves in the opposite direction (forward/reverse) to the direction operated by the work equipment control lever wheel for travel control.
  You can see the direction of the track frame with the bird's eye view icon. For the direction of the track frame, see "Travel Heading Indicator (3-44)".
- **Make sure that the area around the machine is safe and operate the horn before you move off the machine.**
- **Keep persons away from around the machine.**
- **Remove the obstacles from the travel path.**
- **When auto-deceleration is activated, make travel operations with the work equipment control lever wheel carefully. If you make travel operations with the work equipment control lever wheel when the engine speed is decreased by auto-deceleration, the engine speed will increase suddenly.**
- **Make sure that the travel alarm operates normally during the travel.**
- **See the camera image on the machine monitor before you travel in reverse.**
- **The machine can show unexpected behavior because of incorrect operation. When you operate the machine, be sure of the safety around the machine.**
- **When you operate the machine, do not look only on your hands. Be sure to look around the machine.**
- **When you make travel operations for dangerous works such as loading or unloading on a trailer, use the travel levers and travel pedals to reduce operation errors (which includes counter-rotation turn operations). For details, see "Load onto and Unload from a Trailer (3-527)".**

The track control is a function to operate the machine with the right and left work equipment control lever wheels.

For travel operations with the travel pedals and levers, see "How to Start Machine (Travel FORWARD and REVERSE) and Stop Machine (3-255)" and "Steer Machine (3-259)" .

When you make a travel operation, the machine monitor automatically changes to the standard screen.

REMARK

If the travel pedal/lever is operated while the track control is used, the priority is given to the operation of the travel pedal/lever, and the track control is disabled.
The lever wheel of the track control has a shorter dial stroke than the travel lever, and it is not easy to keep intermediate speeds. To keep intermediate speed, it is recommended to operate the machine with the travel pedal/lever.

How to Use Track Control

Before you use the track control, allocate the functions that follow to the lever switch with "Lever Switch Assignment".

- No.4 of "Left Lever Setting": "Track Control Steering"
- No.4 of "Right Lever Setting": "Track Control Forward/Reverse"

REMARK

"Track Control Steering" and "Track Control Forward/Reverse" are assigned to preset No.3 by default.

For the confirmation and setting methods, see "Lever Switch Assignment (3-58)".

How to Start Machine (Travel Forward and Reverse) and Stop Machine When You Use Track Control

Prepare to Move Machine When You Use Track Control

Obey the procedure that follows and do preparation to move the machine.

1. Set the swing lock switch (1) to ON (activated), and make sure that the swing lock indicator (2) is on.

   (a): ON position

   (b): OFF position

2. Look at the direction of the track frame with the bird's-eye view icon (3).

   For the direction of the track frame, see “Travel Heading Indicator (3-44)”.

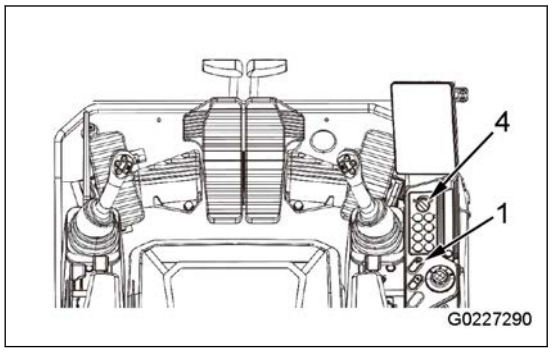

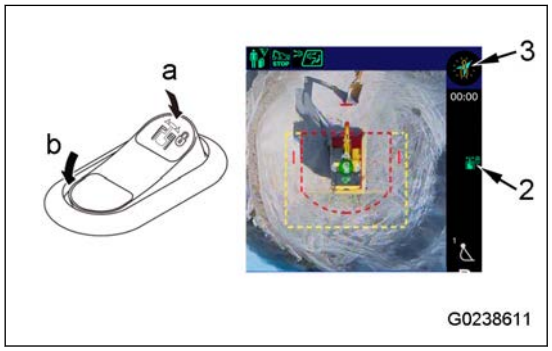

3. Turn the fuel control dial (4) to the maximum rotation (MAX) position

   Increase the engine speed.

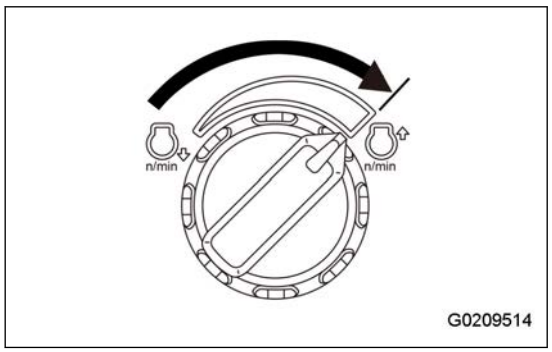

How to Travel Forward When You Use Track Control

1. Operate the operating part (g) of the lock lever to set it to the FREE position (F).

   Set the work equipment to the travel posture and raise it to the height (c) of 40 to 50 cm {15.7 to 19.7 in} above the ground.

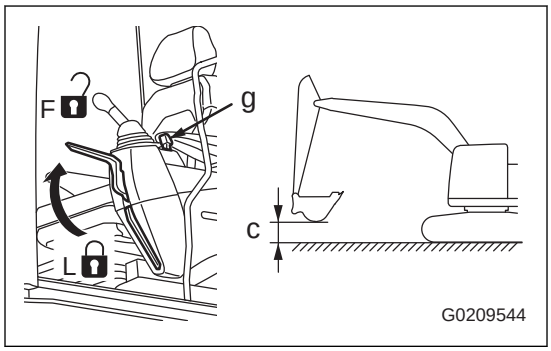

2. Operate the right work equipment control lever wheel (Track Control Forward/Reverse) as follows.

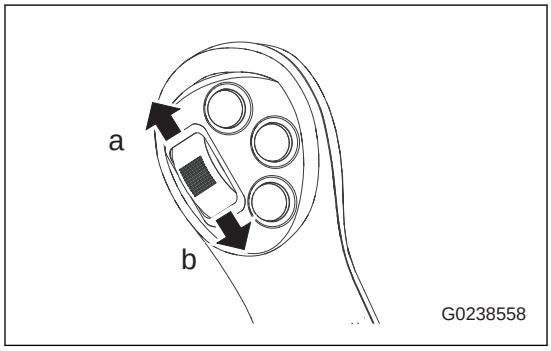

   - When the sprocket (A) is at the rear of the machine

     Rotate the right work equipment control lever wheel (Track Control Forward/Reverse) slowly in the direction of (a), and move the machine.

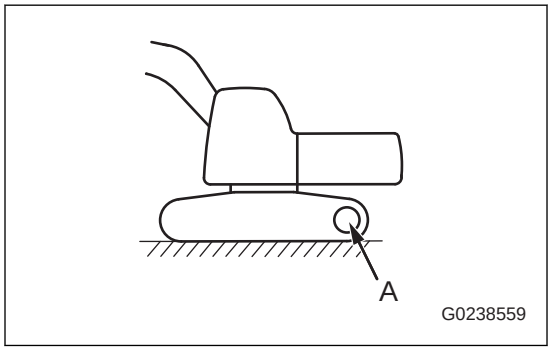

   - When the sprocket (A) is at the front of the machine

     Rotate the right work equipment control lever wheel (Track Control Forward/Reverse) slowly in the direction of (b), and move the machine.

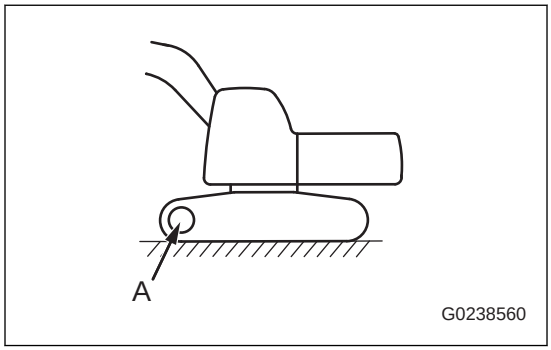

3. Make sure that the travel alarm operates normally during the travel.

   If the travel alarm does not operate, consult your Komatsu distributor for repair.

REMARK

- When you adjust the dial of the lever wheel, you can adjust the travel speed.
- At low temperature, if the machine travel speed is not normal, do the warm-up operation fully.
- If the undercarriage is packed with mud and the machine travel speed is not normal, remove the soil and mud from the undercarriage.

How to Travel Reverse When You Use Track Control

1. Operate the operating part (g) of the lock lever to set it to the FREE position (F).

   Set the work equipment to the travel posture and raise it to the height (c) of 40 to 50 cm {15.7 to 19.7 in} above the ground.

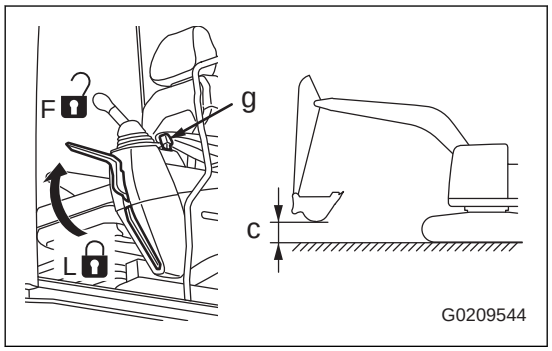

2. Operate the right work equipment control lever wheel (Track Control Forward/Reverse) as follows.

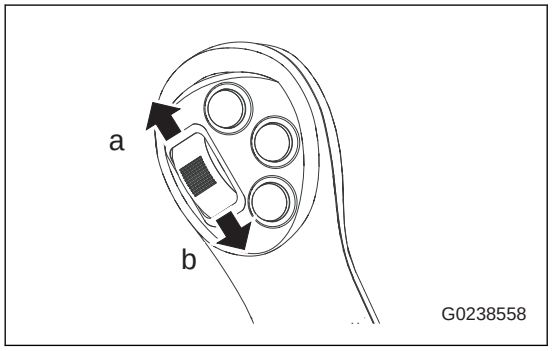

   - When the sprocket (A) is at the rear of the machine

     Rotate the right work equipment control lever wheel (Track Control Forward/Reverse) slowly in the direction of (b), and move the machine.

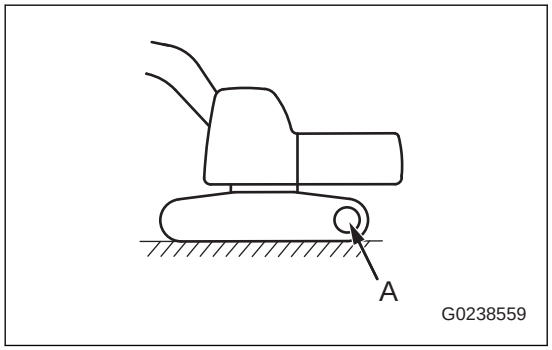

   - When the sprocket (A) is at the front of the machine

     Rotate the right work equipment control lever wheel (Track Control Forward/Reverse) slowly in the direction of (a), and move the machine.

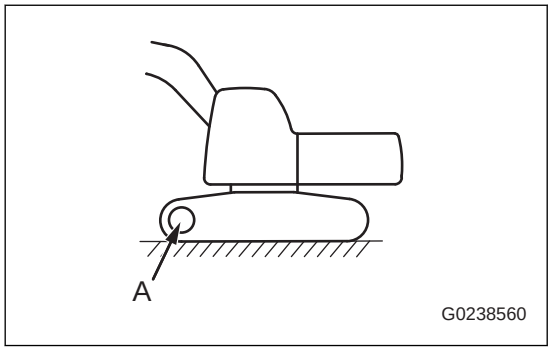

3. Make sure that the travel alarm operates normally during the travel.

   If the travel alarm does not operate, consult your Komatsu distributor for repair.

REMARK

- When you adjust the dial of the lever wheel, you can adjust the travel speed.
- At low temperature, if the machine travel speed is not normal, do the warm-up operation fully.
- If the undercarriage is packed with mud and the machine travel speed is not normal, remove the soil and mud from the undercarriage.

How to Stop Machine When You Use Track Control

Avoid a sudden stop. Stop the machine gradually.

Set the right work equipment control lever wheel (Track Control Forward/Reverse) to the neutral position (c).
The machine stops.

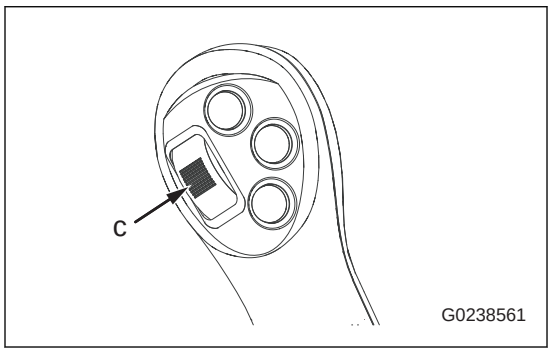

Steer Machine When You Use Track Control

How to Steer Machine (Change Direction) When You Use Track Control

Avoid sudden changes of direction to travel as much as possible. When you do the counter-rotation turn (spin turn), stop the machine temporarily.

Operate the left work equipment control lever wheel (Track Control Steering) as follows.

Operation to Do Counter-Rotation Turn on Site (Track Control in Use)

When you make a counter-rotation turn to the left, turn the left work equipment control lever wheel (Track Control Steering) slowly in the direction of (d).

REMARK

When you make a counter-rotation turn to the right, turn the left work equipment control lever wheel (Track Control Steering) slowly in the direction of (e).
When you adjust the dial of the lever wheel, you can adjust the turning speed.

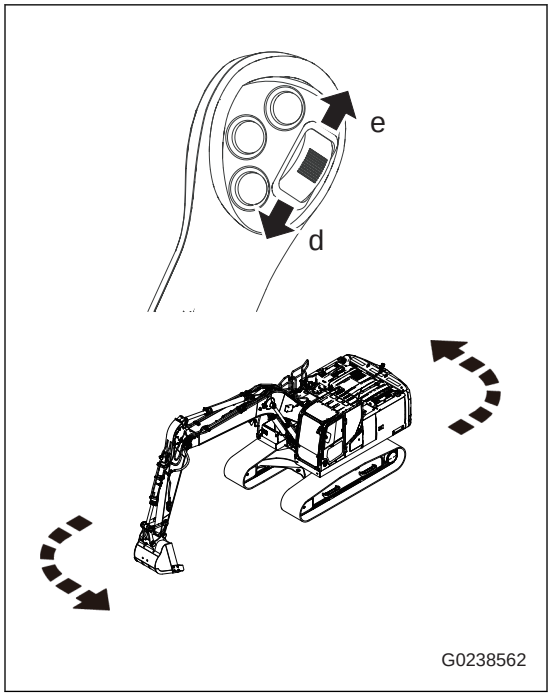

Operation to Change Direction of Machine to Right or Left During Forward Travel (Track Control in Use)

Operate the right work equipment control lever wheel (Track Control Forward/Reverse) and the left work equipment control lever wheel (Track Control Steering) at the same time.
(A): Forward left turn

While the right work equipment control lever wheel (Track Control Forward/Reverse) is kept at position (a), turn the left work equipment control lever wheel (Track Control Steering) in the direction of (e).

(B): Reverse left turn

While the right work equipment control lever wheel (Track Control Forward/Reverse) is kept at position (b), turn the left work equipment control lever wheel (Track Control Steering) in the direction of (d).

REMARK

When you turn to the right, operate the left work equipment lever wheel (Track Control Steering) in the opposite direction.
You can adjust the dial of the right and left lever wheel to adjust the steering direction.

NOTICE

If the track frame is pointed to the rear side (sprockets are in front of the operator), the machine moves in the opposite direction (forward/reverse) to the direction operated by the track control.
On the other hand, the machine turns in the same direction (right and left) as operated by the track control regardless of the direction of the track frame.

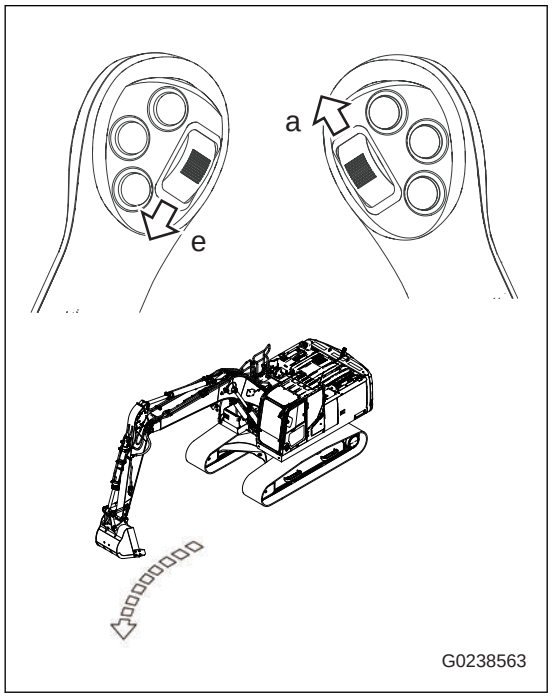

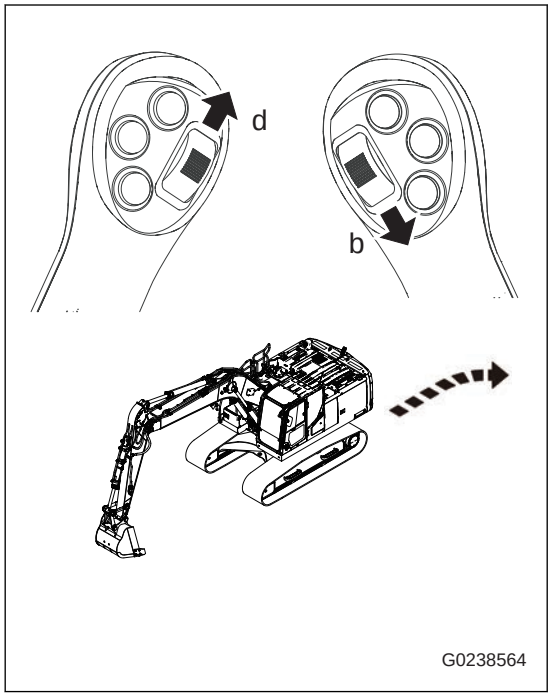

How to Change Travel Speed

WARNING

- **Be sure to operate the machine at low speed (set the travel speed selector switch to Lo) when you load or unload from a trailer. Be sure not to change the travel speed during travel.**
- **If the travel speed is changed with the travel speed selector switch during travel, the traveling direction can shift even if the machine moves straight. Stop the machine before you change the travel speed.**

The travel speed can be changed in 3 steps with “travel speed icon”.

(A): Low speed travel (Lo)

(B): Middle speed travel (Mi)

(C): High speed travel (Hi)

When the engine starts, it is automatically set to Lo.

Each time you push the travel speed icon, the setting changes between Lo, Mi and Hi, alternately.

When the speed is changed over, the travel speed icon is highlighted in yellow for a specified time.

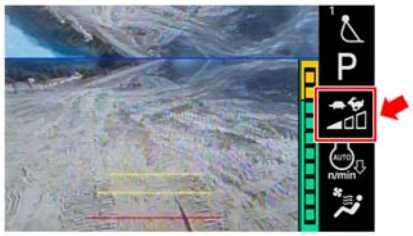

G0209549

G0210272

REMARK

When the machine requires the travel power to move on a soft ground or uphill during the high speed travel (Hi) or middle speed travel (Mi), the system automatically shifts it down to the low speed travel (Lo), and you do not need to change the travel speed manually. In this case, the travel speed icon on the machine monitor display stays on at Hi (high speed) or Mi (middle speed).
When the machine deceleration control of the object avoidance is activated, the brake operates in response to the travel speed. In this case, the travel speed icon on the machine monitor stays on the manually set travel speed.

How to Steer Machine

WARNING

- **The tail of the machine extends from the tracks. Before swing operation, make sure that the area around the machine is safe by visual check or mirror.**
- **For control patterns other than the standard control method (ISO/JIS pattern), see “Control Patterns Other Than Standard Control Pattern (3-525)”.**
- **If the auto-deceleration is activated, operate the work equipment control lever carefully. If you operate the work equipment control lever when the engine speed decreases by the auto-deceleration function, the engine speed will increase suddenly.**

When you swing the upper structure, do the procedure as follows.

1. Before you do swing operation, set the swing lock switch to OFF (cancel).
   (a): ON position
   (b): OFF position
2. Make sure that the swing lock indicator (1) is off.

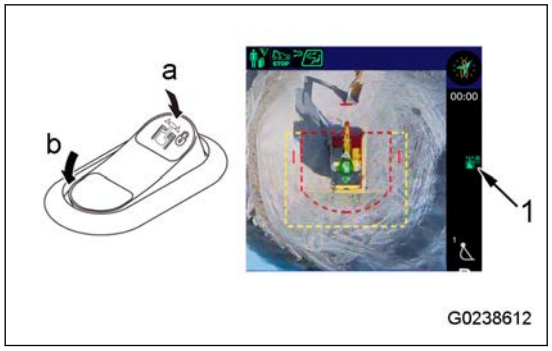

3. Operate the left work equipment control lever to do the swing.
   (A): Swing LEFT
   (B): Swing RIGHT

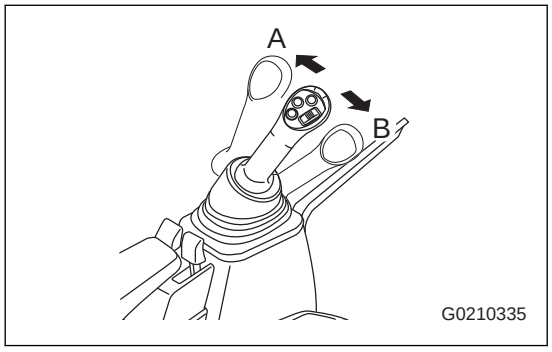

4. When you do not do swing operation, set the swing lock switch to the ON position (activate).
   (a): ON position
   (b): OFF position
5. Make sure that the swing lock indicator (1) is on.

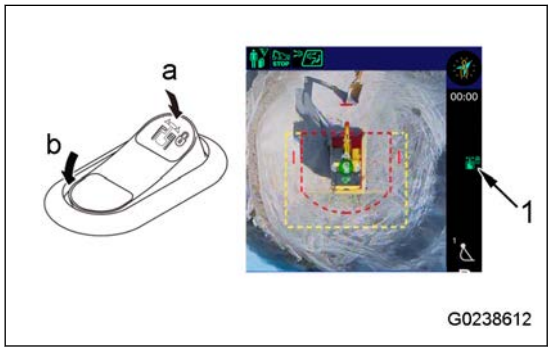

How to Operate Work Equipment

⚠ WARNING

- **For control patterns other than the standard control method (ISO/JIS pattern), see “Control Patterns Other Than Standard Control Pattern (3-525)”.**
- **If the lever is operated when the engine speed is decreased by the auto-deceleration function, the engine speed will suddenly increase, so be careful of operation.**

Use the R.H. and L.H. work equipment control levers to operate the work equipment.

Be sure to hold the work equipment control levers with both hands during operation.

When you let go of the work equipment control levers, they go back to the NEUTRAL position and the work equipment is held in that position.

- Arm operation

  Move the L.H. work equipment control lever back and forth.
  You can operate the arm.

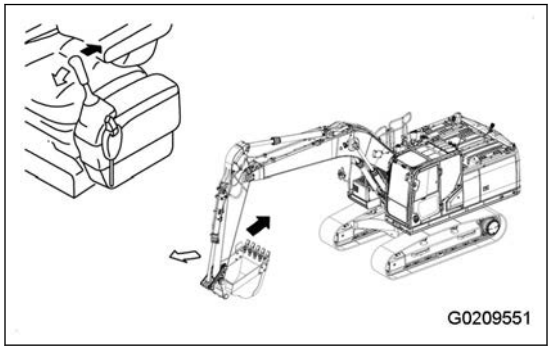

- Swing operation

  Move the L.H. work equipment control lever to the right and left.
  The upper structure swings.

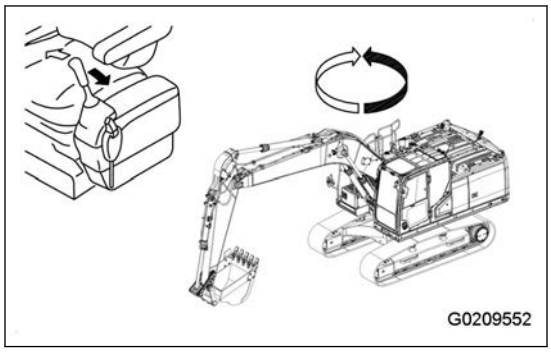

- Boom operation

  Move the R.H. work equipment control lever back and forth.
  You can operate the boom.

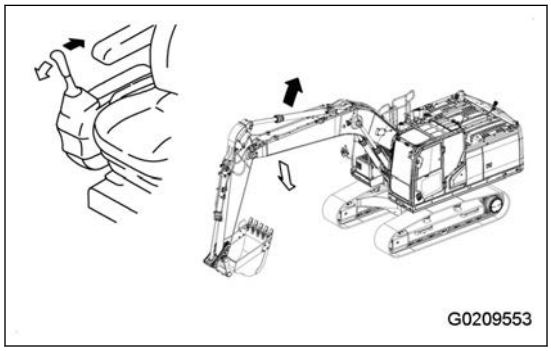

- Bucket operation

  Move the R.H. work equipment control lever to the right and left.
  You can operate the bucket.

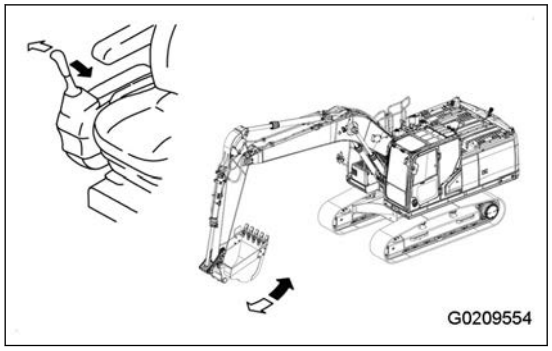

If the work equipment control lever is set to the NEUTRAL position when the machine stops, the auto-deceleration mechanism reduces the engine speed to the low speed even if the fuel control dial is at the High idle (MAX) position.

REMARK

The accumulator is installed to the control circuit of this machine. You can lower the work equipment to the ground by the operations that follow, even when the engine stops.

1. Turn the starting switch to the ACC position, and log on to the system.
2. Set the lock lever to the FREE position.
3. Operate the work equipment control lever in the LOWER direction for the work equipment.

You can use this procedure to release the remaining pressure in the hydraulic cylinder circuits or to lower the boom after you load the machine on a trailer.

Handle Working Mode

How to Operate Work Mode

Select the working mode that meets the work conditions or contents. This will make it possible to do the operations effectively.

Select the applicable working mode as follows.

Set the most applicable mode for the work.

Working mode icon	Working mode	Applicable operations
P+ G0210288	Power plus mode	Normal digging, loading work (Operations with emphasis on high productivity)
P G0210289	Power mode	Normal digging, loading work (Operations with emphasis on high productivity)
E G0210290	Economy mode	Normal digging, loading work (For operations with emphasis on fuel consumption)
L G0210291	Fine control mode	Aligning positions or such (fine operation)

Set the working mode as follows.

For Setting on Machine Monitor

1. Tap “Working mode icon”.

   The working mode selection screen is shown.

   REMARK

   When the attachment is set to breaker, the working mode icon is not shown.

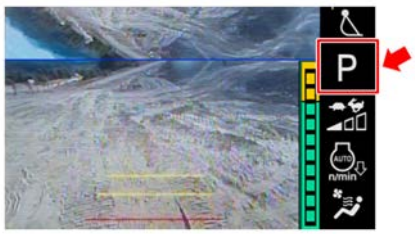

G0209555

2. Tap the working mode to be set.

   The screen changes to the standard screen.
   The working mode icon changes to the set working mode and is highlighted in yellow for several seconds.

   REMARK

   Hold down “E Mode” to select the economy adjustment mode. For the economy mode adjustment, see “Economy Mode Adjustment (3-72)”.

   Set the working mode at startup. For details, see “Working Mode at Startup Setting (3-70)”. It is set to P mode when machine is shipped from plant.

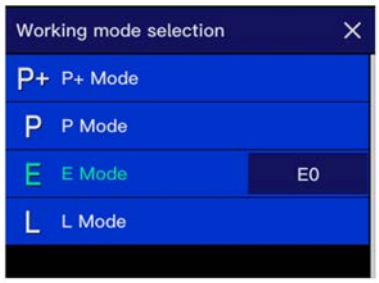

G0228923

For Setting with Lever Switch

When the switch allocated to “Working Mode Switch” is pushed, the working mode changes in the sequence that follows.

P+ > P > E > L > P+ > …

REMARK

You can change the working mode with the lever switch only while the work equipment control lever is in the neutral position.

How to Use One-Touch Power Maximizing Function

You can increase the operating power by a single touch during operation. Take advantage of this function if necessary in combination with the working mode.

Push and hold the left work equipment control lever switch (1).
The operating power increases while the switch is pushed.

REMARK

The increased power automatically stops after 8.5 seconds.
This function does not operate when the working mode is L mode, or the set attachment is a breaker. For details of the switch allocation, see “Lever Switch Assignment (3-58)”.

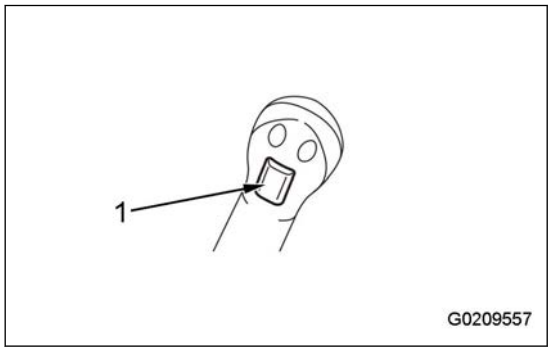

Auto-Deceleration Function

When the auto-deceleration function is ON, the engine speed decreases from the work speed to the low idle speed approximately 4 seconds after the work equipment lever and travel lever are set to the NEUTRAL position. This reduces the fuel consumption.

If you operate even one of these levers again in this state, the engine speed goes back to the initial work speed and you can do the work.

For how to use the auto-deceleration function, see “Auto-Deceleration Icon (3-42)”.

REMARK

When the working mode is set to the L mode, auto-deceleration is automatically set to OFF. When you use the auto-deceleration function, set auto-deceleration to ON.

Auto Idle Stop Function

The auto idle stop function stops the engine automatically when the engine is operated continuously at idle with the lock lever in the LOCK position for a set time.

The auto idle stop function operates when the conditions that follow are agreed with.

- The engine runs normally.
- The lock lever is in the LOCK position.
- The engine coolant and hydraulic oil are not overheating.
- The engine or hydraulic component is not during automatic warm-up operation.
- The machine is not in the L mode.

You can change the set time to operate the auto idle stop function on the Auto Idle Stop Timer Setting screen.

For how to change the time to operate the auto idle stop function, see “Auto Idle Stop Time Setting (3-65)”.

Operation of Auto Idle Stop Function

1. When the idling time becomes 30 seconds before the set time, the machine monitor goes back to the standard screen, and changes to the countdown screen.

   REMARK

   When you set the lock lever to the FREE position, the countdown stops and the screen goes back to the standard screen.

2. When the countdown reaches 0, the engine stops, and the screen changes to “Auto Idle Stop Engaged” screen.
3. To prevent battery discharge, turn off the switches that are not necessary and set the starting switch to the OFF position.

   REMARK

   - While the auto idle stop is activated, only the engine stops. Electrical components such as the air conditioner, radio, lamps, windshield wiper, and also the machine monitor continues to be in operation as the time before the engine stops.
   - This machine has an auto power off function. If the auto power off function is ON, the main power supply is turned off even when the starting switch is not turned to the OFF position manually. For the auto power off, see “Auto Power Off (3-15)”.

4. When you start the engine again, turn the starting switch as usual.

Prohibited Operations

⚠ WARNING

- **Do not operate the work equipment control lever while the machine travels.**
- **If the auto-deceleration is activated, operate carefully the travel lever and the travel pedal. If you operate the travel lever and the travel pedal when the engine speed decreases by the auto-deceleration function, the engine speed will suddenly increase.**

Do Not Use the Swing Force to Hit and Give Shocks to the Object

Do not use the swing force to compact soil or break objects. This is not only dangerous, but also drastically reduces the life of the machine.

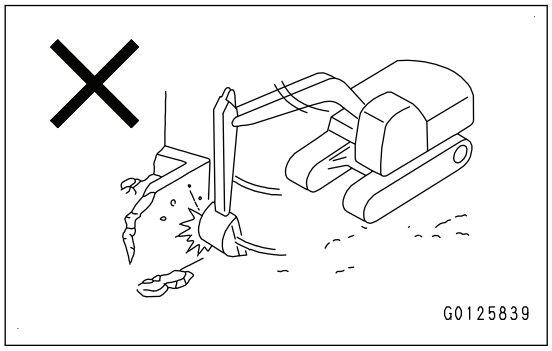

Prohibition of Operations by Travel Force

Do not do digging work while the machine travels with the bucket thrusted into the ground. Digging with the travel force can cause damage to the machine.

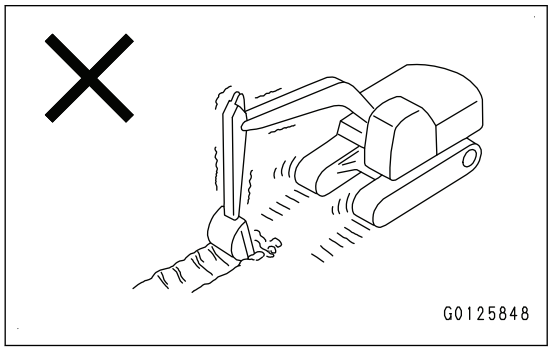

Prohibition of Operations at Stroke End of Hydraulic Cylinder

Do not do the work with the hydraulic cylinder at stroke end (fully extended or fully retracted). When external force shock is applied to the work equipment at the stroke end, it can cause damage to the hydraulic cylinder, which can cause serious personal injury or death.

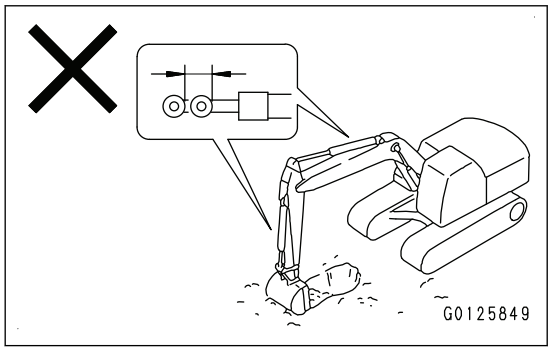

Do Not Work If Foreign Material is Accumulated Around Hydraulic Cylinder

If operation is continued while something sticks between the hydraulic cylinder and work equipment, the cylinder rod may bend and break.

Do not perform the work while something sticks between the hydraulic cylinder and work equipment.

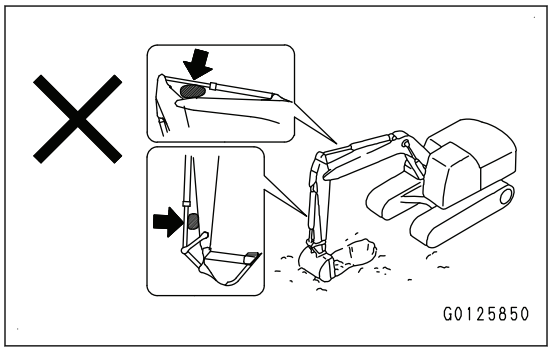

Prohibition of Operations with Bucket Dropping Force

Do not use the dropping force of the machine for digging, nor use the dropping force of the bucket as a mattock, breaker, or pile driver. This will drastically reduce the life of the machine.

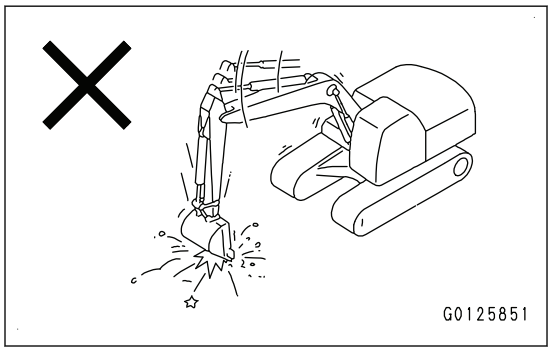

Prohibition of Operations Which You Use Bucket as Lever

Do not put the bucket back to a rock and use it as a lever to dig. This can apply an excessive force to the machine, which can cause damage.

As shown in the figure, dig only by the force of the arm or bucket. An excessive force can be automatically controlled to prevent damage to the machine.

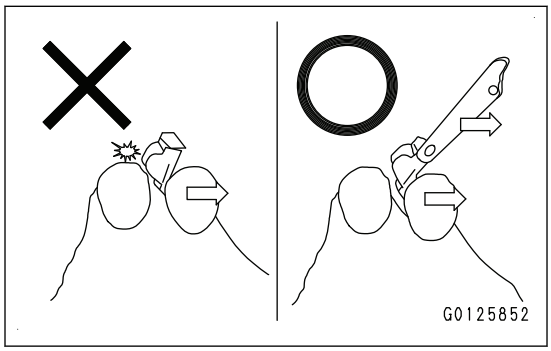

Prohibition of Operations by Machine Drop Force

Do not use the dropping force of the machine to excavate.

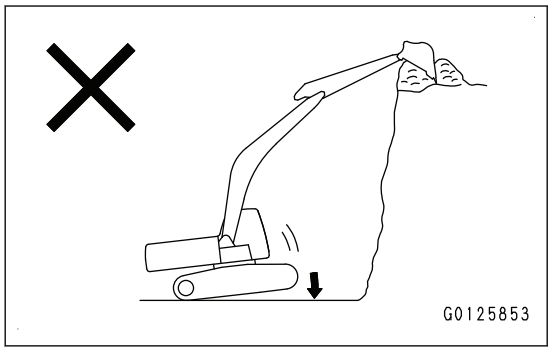

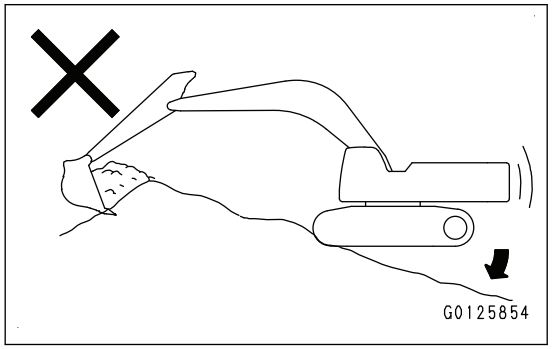

Prohibition of Digging Operation at an Angle When Teeth Do Not Engage

When the bucket teeth do not engage a hard rock in digging upper side, do not do the digging work while the machine swings. A large vibration occurs on the machine because the teeth slip down on the rock surface, which can cause cracks on the work equipment and the frame part.

If the bucket teeth slides and collides with a rock, an excessive load occurs in the work equipment and frame, which can reduce the service life of the machine.

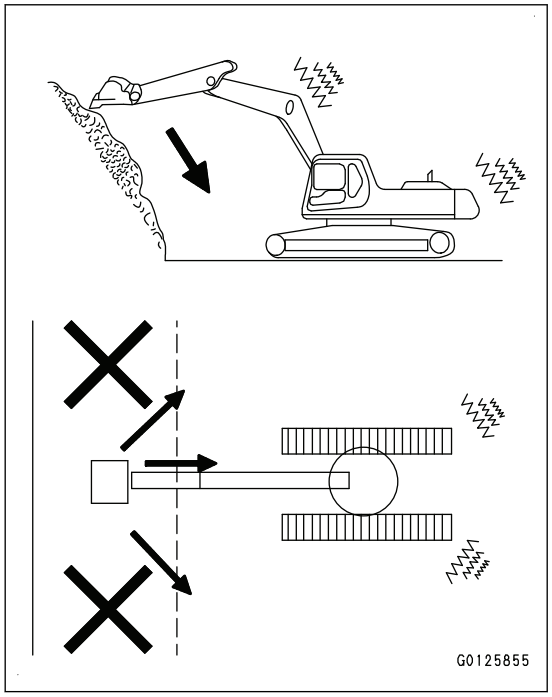

Prohibition of Dig Operation on Hard Rocky Ground

Do not attempt to directly excavate hard rocky ground with the work equipment. It is better to excavate it after breaking up by some other means. This will not only save the machine from damage but will make for better economy.

Prohibition of Operations When Machine is Not in Stable Condition

If the undercarriage is not stable during the work, torsional load occurs at the frames, which makes the machine's service life shorter.

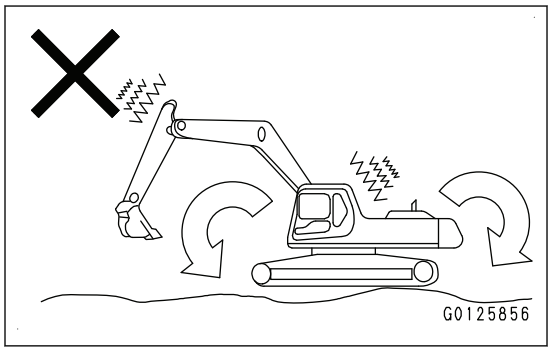

When the undercarriage is not stable, make a pile of soil under the front of the tracks to make the machine stable. Then, start the work.

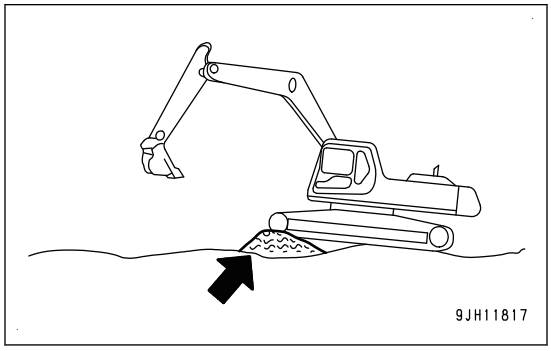

Prohibition of Swing or Travel When Rocks and Soils are on Top of Track Assembly

Before the travel or the swing operation, make sure that there is no rock or soil on the tracks.

If you travel or swing the machine with rocks and soils on the tracks, it can cause damage to the undercover and the frames. Furthermore, damage to the hydraulic component can cause serious personal injury or death.

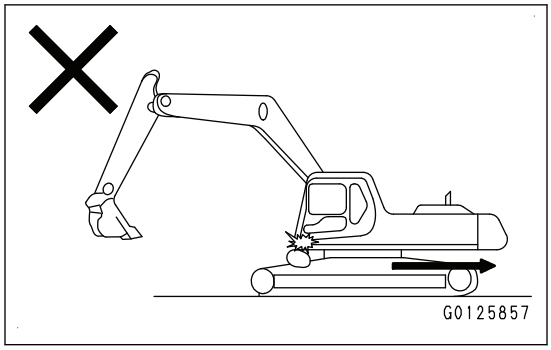

Prohibition of Lifting Operation

Lifting operation by this machine is not allowed, but it is allowed only when the exclusive lifting hook is installed.

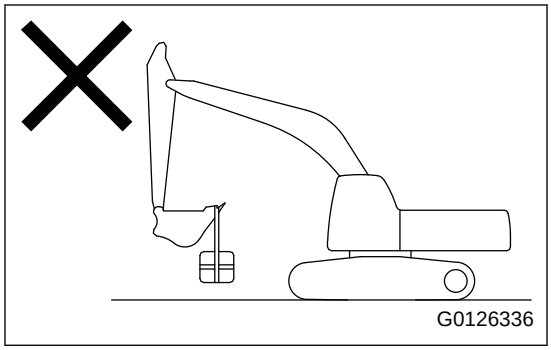

Prohibition of Sudden Operation of Travel Lever or Travel Pedal

Do not make a sudden operation of the travel levers and pedals such as operations that follow.

- A sudden operation to make a sudden start
- A sudden change of the travel direction
- A sudden stop from almost the maximum speed

Prohibition of High-Speed Travel Operations on Rough Ground

If you drive the machine on rough ground such as rock-bed, etc. at high speed, large push-up loads are applied to the machine each time it rides over a rough road surface, which decreases the service life of the machine body.

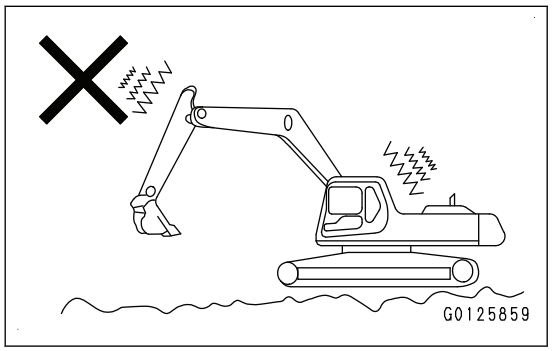

If you drive the machine on rough ground such as rock-bed, set the idler (1) toward the direction of travel and drive it at low speed.

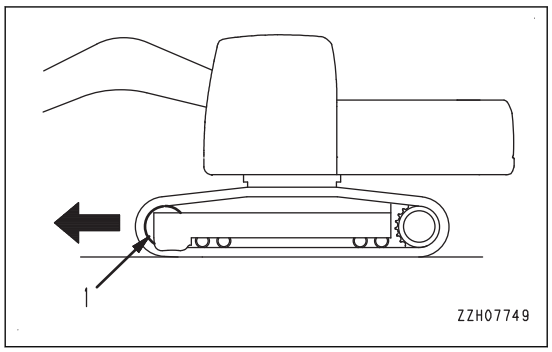

Prohibition of Long-Time Travel

When you drive the machine at high speed for 1.5 hours or more, the temperature of the lubrication oil in the track rollers and final drive rises to a high temperature. There is a risk that it causes damage to the oil seal and causes oil leakage.

When you let the machine travel for a long time, stop the machine for 30 minutes every 1.5 hours to decrease the temperature of the lubricating oil in the track rollers and the final drives.

If the machine travels for a long time while the tracks are loosened, it can cause damage to the undercarriage parts in a short period.

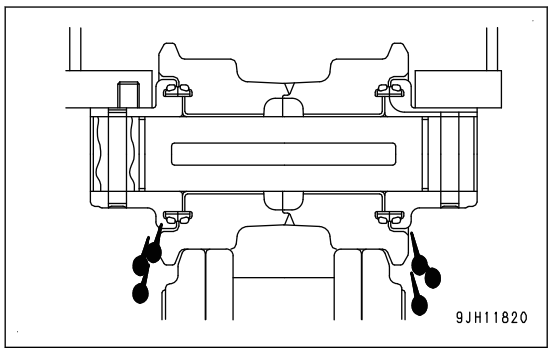

When you drive the machine for a long time, examine the tension of the track every 1.5 hours of travel, and adjust the tension if it is loose.

For the adjustment, see the Maintenance, “How to Examine and Adjust Track Tension (4-31)”.

Precautions for Operation

⚠ CAUTION

If the work equipment, swing, or travel operation does not operate correctly, let go of the work equipment lever, and set the lock lever to the LOCK position. The work equipment, swing, and travel operations stop.

Precautions When Machine Travels

Obstacles such as large boulders and stubs must be avoided or removed in advance. Do not ride over them as long as possible. If the machine travels over an obstacle, a large shock can occur (especially the undercarriage) and cause damage to the machine.

In unavoidable circumstances, reduce the travel speed, keep the work equipment near the ground. Also, travel the machine with the center of the track over the obstacle.

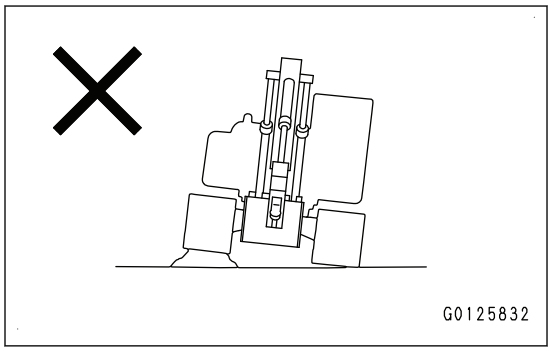

Precautions for High Speed Travel

When you operate the machine on a rock-bed with a lot of bumps or on a rough road with a lot of boulders, reduce the travel speed to “Lo”. Also, when you operate the machine at “Hi” speed, set the idler in the travel direction.

- Tap the travel speed icon to change the travel speed.

  For details and changing method of the travel speed, see “How to Change Travel Speed (3-267)”.

Allowable Depth of Water, Soil and Dirt

NOTICE

When driving the machine out of water, if the angle of the machine exceeds 15 °, the rear of the upper structure will go under water, and water will be thrown up by the cooling fan. This may cause the fan to break. Be extremely careful when driving the machine out of water.

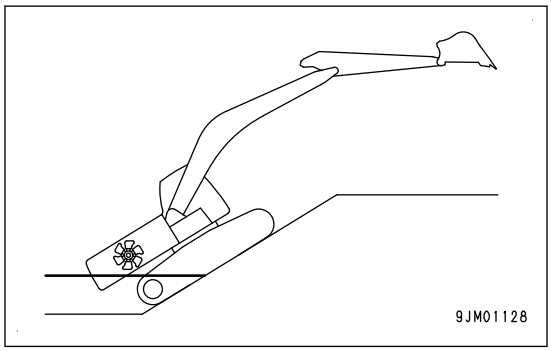

Do not drive the machine in water or soil or sand deeper than the center of upper carrier roller (1).

After the job, be sure to supply grease to the parts which have been under water for a long time until the used grease is projected. (Around the bucket pin, in particular)

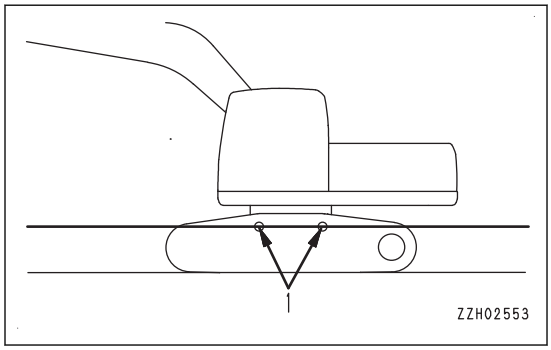

Precautions When You Work on Slope

WARNING

- **Avoid the work on a slope as much as possible. There is a danger that the machine loses the balance and falls over when you operate swing operation and work equipment operation.**
  It is especially dangerous to do the swing operation to the downhill side when the bucket is loaded. If it is necessary to do such operations, prepare an embankment to make a platform (A) on the slope, and keep the machine as level as possible.

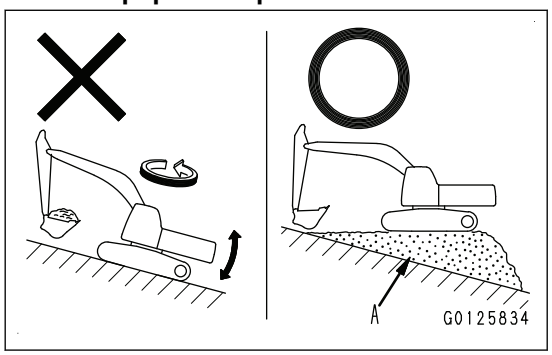

- **Do not move the machine or do the operation on the slope where the steel plates or such are put. The machine can slip easily even on a shallow slope, and it is dangerous.**
- **Do not climb up and travel down on the steep slope. There is a danger that the machine falls over. (Maximum ascending angle: 35°)**
- **A level indicator is installed on the machine. See this for the inclination angle. For the level indicator, see "Level Indicator (3-117)".**
- **When you travel the machine, raise the bucket approximately 20 to 30 cm {7.9 to 11.8 in} above the ground. Do not operate the machine in reverse on a downhill.**
- **Do not steer the machine or travel across on the slope. Travel the machine safely. For example, get off on a level area and then bypass.**
- **While you operate or travel, be ready to stop safely when the machine slips or does not become stable.**
- **Do not pull the arm to use the force of the work equipment to help the machine travel uphill when the tracks slip and the machine cannot travel uphill with only the force of the tracks. There is a danger that the machine falls over.**

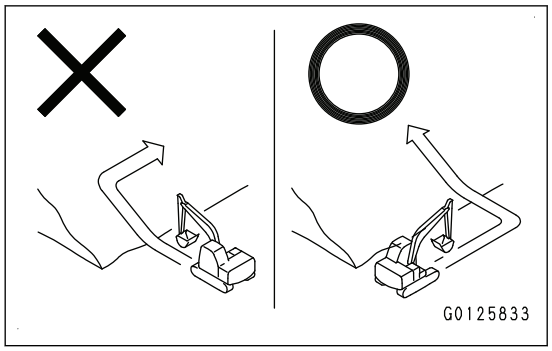

- **On a slope, even if the engine stops, the machine can swing with its own weight when the swing operation is done.**
  Be sure not to do this swing operation by its own weight. This operation cannot be controlled with lever, and there is a danger that serious personal injury or death occur by the movement that the operator does not intend.

CAUTION

- **On a slope, do not open or close the door during travel or work. The operating force can suddenly change. Be sure to lock the doors in the open or closed position.**
- **If the machine stop control of the object avoidance operates while the machine travels across on an area where the angle of the slope changes, there is a danger that the machine will lose balance.**
  You must not travel the machine across on a slope because it is very dangerous.
  If it is necessary to change the route, travel the machine safely. For example, get off on a level area and then bypass.
  If you need to travel the machine across at your own risk, turn off the machine stop control.
  How to Handle Object Avoidance
  "Monitor Display (3-361)"
  "Function of Object Avoidance (3-362)"
  "Monitor Display of Object Avoidance (3-365)"
  "How to Set Object Avoidance (3-367)"

NOTICE

Set the sprocket (1) to the downhill side when you move the machine downhill. If the machine travels down with the sprocket (1) at the uphill side, the tracks can be loosened and can cause jump tooth.

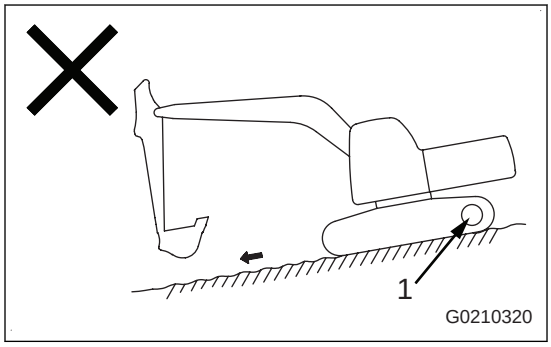

- When the machine travels down the steep slope, use the travel lever and fuel control dial to keep the travel speed low.

  When the machine goes downhill on a steep slope with an angle of 15 ° or more, set it to the posture shown in the figure with the sprocket (1) at the downhill side and lower the engine speed.
  a: 20 to 30 cm {7.9 to 11.8 in}

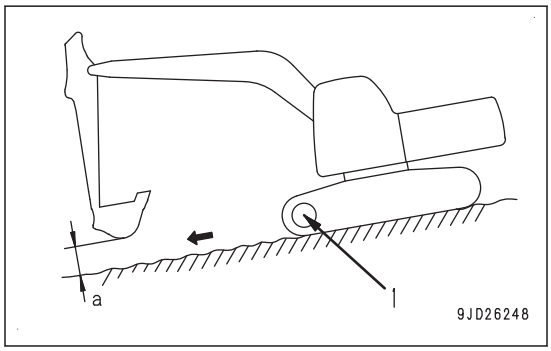

- When the machine travels on a steep uphill of 15 ° or more, set the machine to the posture shown in the figure.

  a: 20 to 30 cm {7.9 to 11.8 in}

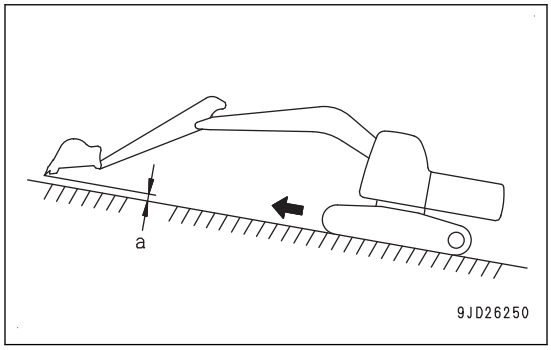

Braking on Downhill Slope

Set the travel lever to the NEUTRAL position to apply the brake automatically.

If Engine Stops

If the engine stops while the machine travels on an uphill, move the travel lever to the NEUTRAL position, lower the bucket to the ground, stop the machine, and then start the engine again.

Be Careful of DEF Level

Before you do the operation on a slope or operate it on a rough ground, examine the DEF tank and add sufficient quantity of DEF as necessary. If the remaining DEF level becomes low, sudden drop of its level or problem in the urea SCR system can be sensed. If the DEF level caution lamp or DEF system caution lamp comes on in red, move the machine to a level area immediately, and add DEF.

Escape from Soft Ground

Move the machine carefully not to get stuck in soft ground such as mud. If the machine gets stuck in soft ground, you can escape as follows.

How to Escape When Track on One Side is Stuck

NOTICE

When you raise the machine with the boom and arm, push the ground with the bucket bottom (do not push with the tooth).
At this time, set the angle between the boom and arm to 90 to 110°.
Do the same when inverted bucket is used.

When the track on one side gets stuck, get the machine out with the procedure that follows.

1. Put the bucket on the ground on the stuck side, and push the ground.

   The track is raised.
2. Put a log or wooden blocks under the track to make footing.
3. Raise the bucket and escape.

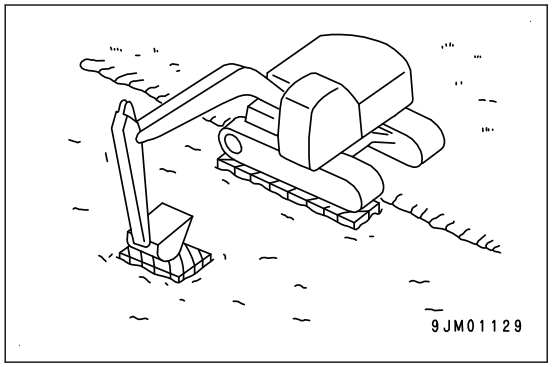

How to Escape When Tracks on Two Sides are Stuck

When the two tracks get stuck, get the machine out by the procedure that follows.

1. Put items to make footing for the tracks on the two sides.
   1) Put the bucket along the side of the machine to push the ground.

      The track is raised.
   2) Put a log or wooden blocks under the raised track as footing.
2. Thrust the bucket into the front ground.
3. Move the arm IN as in digging work and set the travel lever to FORWARD to escape the machine.

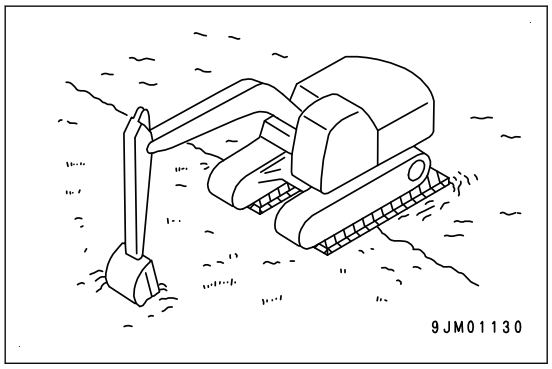

Recommended Applications

In addition to the following, it is possible to further increase the range of applications by using various attachments.

Digging Work

Backhoe Work

It is suitable for excavating areas that are lower than the machine.

When the condition of the machine is as shown in the figure (angle between bucket cylinder and link, and between arm cylinder and arm is 90 °), the maximum excavation force is obtained from the pushing force of each cylinder.

When excavating, you can optimize your working efficiency by using this angle effectively.

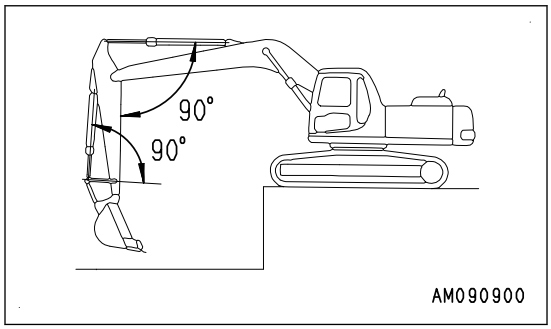

The range for excavating with the arm is from a 45 ° angle away from the machine to a 30 ° angle towards the machine.

There may be some differences depending on the excavation depth, but try to stay within the above range rather than operating the cylinder to the end of its stroke.

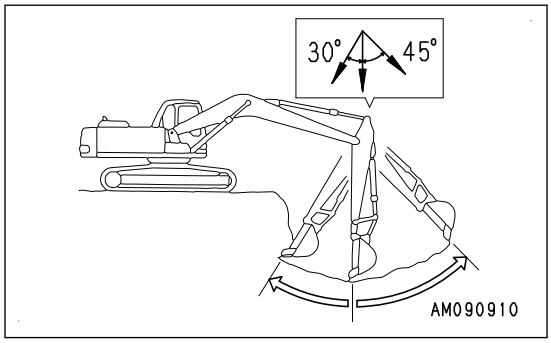

Shovel Work

This is suitable for excavating at a position higher than the machine.

Shovel work is performed by attaching the bucket in the reverse direction.

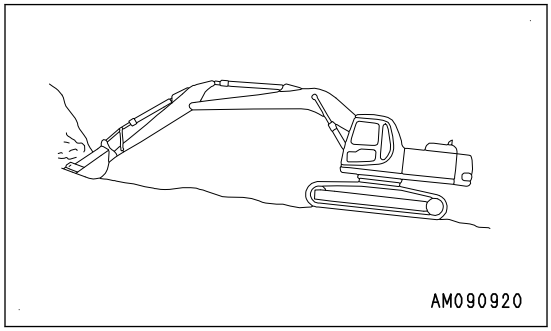

Ditching Work

The machine can do ditching work.

The basic procedure to excavate a wide ditch is to dig the two sides first and finally remove the center.

The efficiency of ditching work increases with the steps that follow.

- Install the bucket that is applicable for ditching work.
- Make the tracks parallel to the groove which is ditched.

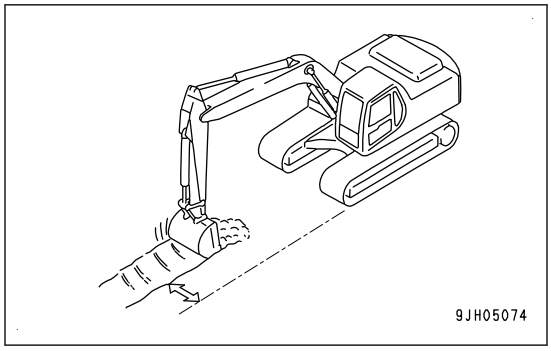

Loading Work

The machine can load rocks and soils, etc. to a dump truck.

You can put the dump truck in an area which gives a small swing angle and good visibility for better efficiency in loading.

The loading will be easier when the machine is at the rear of the dump truck. More soils can be loaded than when the machine is lateral to the truck.

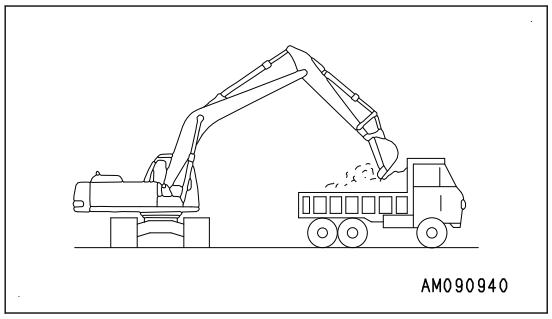

Effective Use of Hydraulic Excavator

Operation to Reduce Fuel Consumption

(Carbon dioxide emissions reducing operation)

The operating methods for reducing fuel consumption are as follows.

- Avoiding unnecessary engine idle running
- Avoiding hydraulic relief
- Running at low engine speed
- Reducing excavation at high position
- Operation at minimum swing angle
- Traveling at low engine speed

We can provide our users the training for operating methods to increase the productivity and to reduce the fuel consumption. Contact your Komatsu distributor for details.

How to Replace and Invert Bucket

⚠ WARNING

- **When you do the work, wear the protective equipment such as goggles, hard hat, and gloves. When you hit the pins with a hammer, pieces of metal could fly and cause serious injury.**
- **When you put the removed bucket, keep it in a stable condition.**
- **Because the pins are hit with a strong force, they can fly out and cause injury to people around the bucket. Make sure that there is no one around the bucket.**
- **When you pull out the pins, do not stand behind the bucket. Be very careful not to put your foot from the side to do the work.**
- **Be very careful not to get your fingers caught when you remove or insert the pins.**
- **When you align the holes, you must not insert your hands into the pin holes.**

Do the work on a level ground in good condition. Also, when multiple workers work together, assign a person who will direct the work and follow the person's instructions.

How to Replace Bucket

NOTICE

- **After the pins are pulled out, make sure that mud or sand does not get on them.**
- **Dust seals are installed in the two ends of bushings. Be careful not to cause damage to them. If damage is caused to the dust seal, replace it with a new one. If it is used without replacement, sand and dirt can enter the inside and cause unusual wear of the pin.**

Replace the bucket as follows.

1. Lower the bucket on a level ground.

   REMARK

   When you pull out the pins, lower the bucket on a ground lightly.
   If the bucket is lowered on the ground with too much force, the resistance will be increased and it will not be easy to remove the pins.

2. Remove the double nut of the stopper bolt at the arm pin (A) and link pin (B), and then pull out the bolts. Remove the arm pin (A) and link pin (B), and remove the bucket.

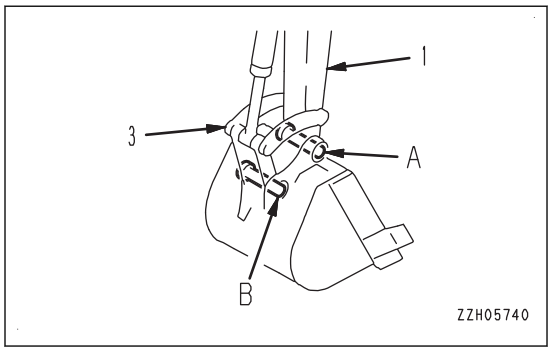

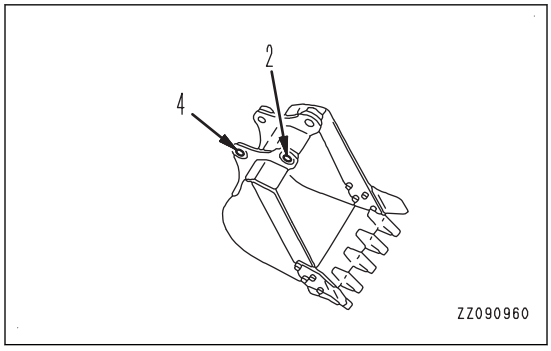

3. Align the arm (1) with the hole (2) of the replacement bucket, align the link (3) with the hole (4), and then install the pins (A) and (B) on which grease is lubricated.

REMARK

When you install the bucket, install the O-ring (5) to the bucket (6) at the position shown in the figure for the arm pin part (A). After you insert the pins, put it into the regular groove. Install the bucket while the O-ring (5) is engaged into the regular groove for the link pin part (B).

4. Install the stopper bolt and nut for each pin, and apply grease to the pins.

REMARK

- Add grease sufficiently until grease protrudes from the shaft end.
- If damage is caused to the dust seal when you replace the bucket, replace the dust seal with a new one. If it is used without replacement, sand and dirt can enter the inside and cause unusual wear of the pin.

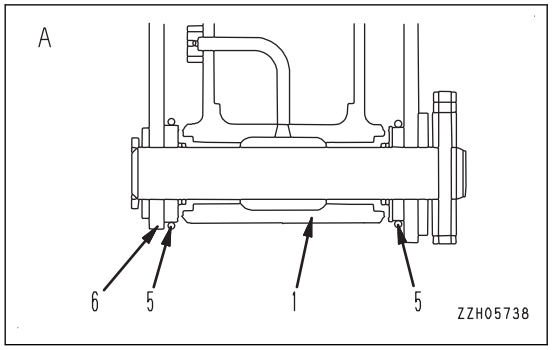

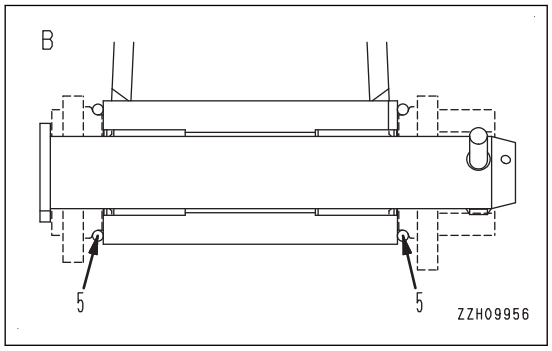

How to Invert Bucket

WARNING

When you invert the bucket, do the work very carefully not to let the bucket interfere with the cab. When you invert the bucket, the trail of the bucket blade sticks out and interferes with the cab, and there is a danger that serious accident occurs.

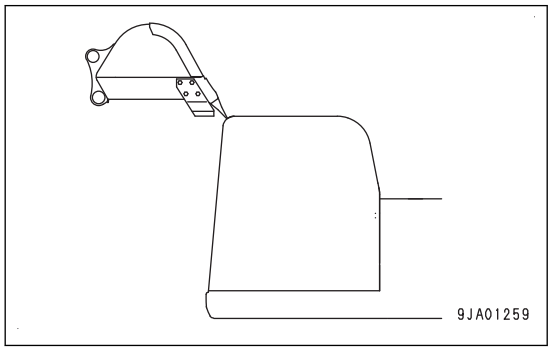

NOTICE

- **After the pins are pulled out, make sure that mud or sand does not get on them.**
- **Dust seals are installed in the two ends of bushings. Be careful not to cause damage to them. If damage is caused to the dust seal, replace it with a new one. If it is used without replacement, sand and dirt can enter the inside and cause unusual wear of the pin.**

Invert the bucket as follows.

1. Lower the bucket on a level ground.

REMARK

When you pull out the pins, lower the bucket on a ground lightly.
If the bucket is lowered on the ground with too much force, the resistance will be increased and it will not be easy to remove the pins.

2. Remove the double nut of stopper bolt at the arm pin (A) and the link pin (B), and then pull out the bolt.
3. Pull out the arm pin (A) and the link pin (B) to remove the bucket.

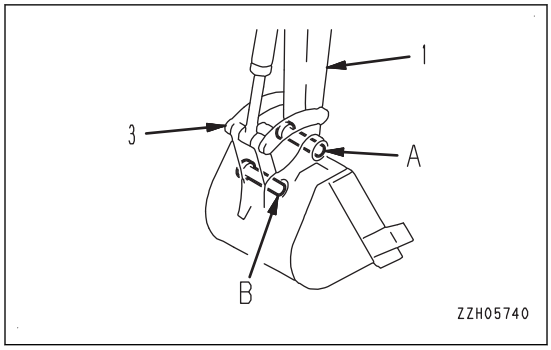

4. Invert the removed bucket.

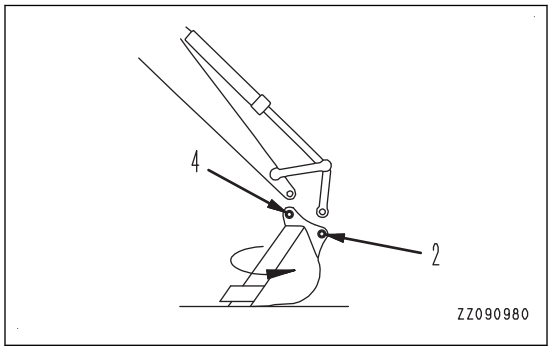

5. Align the arm (1) with the hole (2) of the replacement bucket, align the link (3) with the hole (4), and then install the pins (A) and (B) on which grease is lubricated.

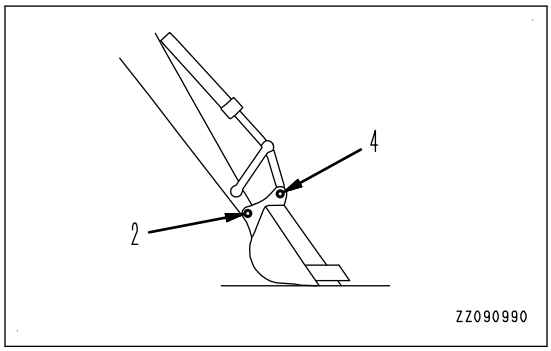

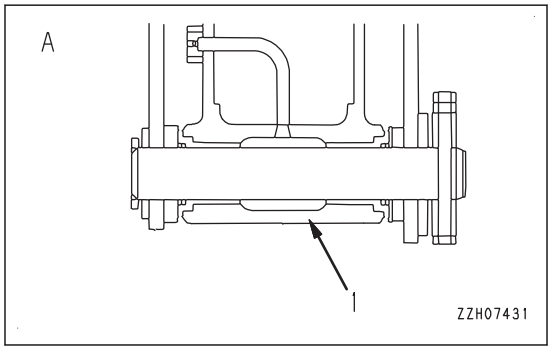

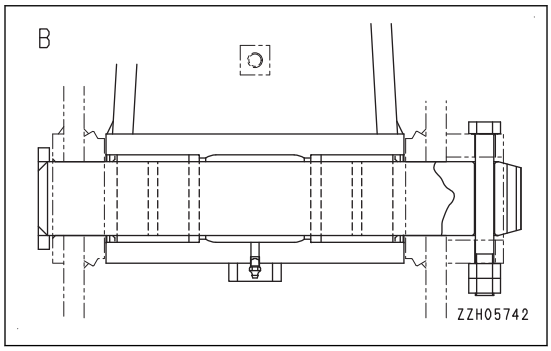

REMARK

Do not install the O-rings when the bucket is inverted. Keep them until the next time you use them.

6. Install the stopper bolt and nut for each pin, and apply grease to the pins.

   REMARK

   - Add grease sufficiently until grease protrudes from the shaft end.
   - If damage is caused to the dust seal when you replace the bucket, replace the dust seal with a new one. If it is used without replacement, sand and dirt can enter the inside and cause unusual wear of the pin.

How to Park Machine

⚠ WARNING

- **Stop the machine gradually. Do not stop suddenly.**
- **Park the machine on a hard and level ground.**
  Do not park the machine on a slope.
  If you need to park the machine on a slope, put chocks on the tracks to prevent the machine movement, and thrust the work equipment into the ground.
- **If you touch the control levers by mistake, there is a possibility that the machine suddenly moves and it can cause personal injury or death. Before you stand up from the operator seat, be sure to set the lock lever to the LOCK position.**

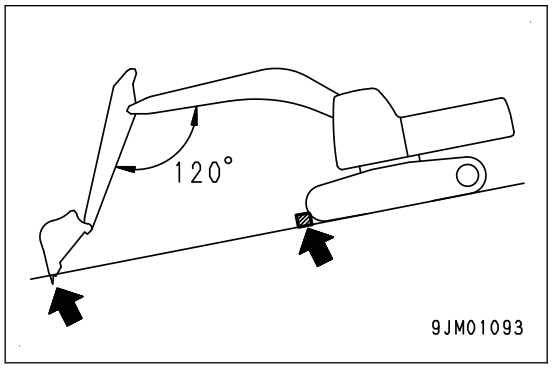

1. Set the R.H. and L.H. travel levers (1) in the NEUTRAL position.

   The machine stops.

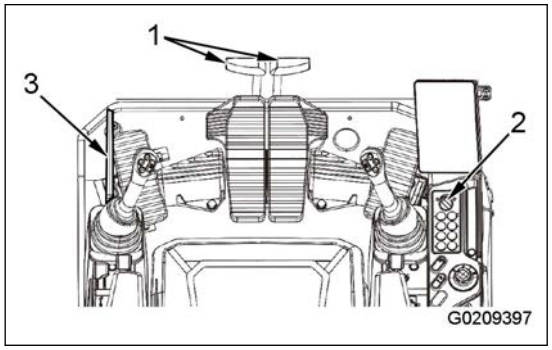

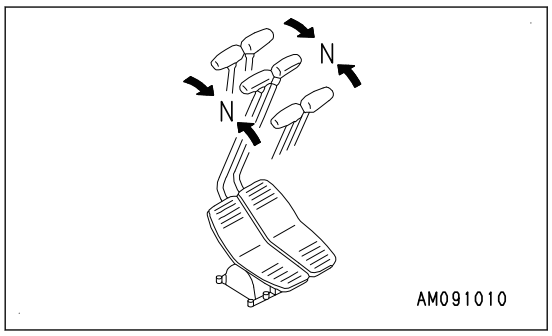

2. Set the fuel control dial (2) to the Low idle (MIN) position to decrease the engine speed.

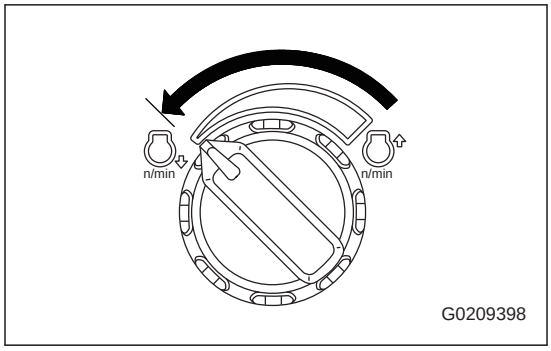

3. Set the undercarriage and upper structure in the same direction, and lower the bucket to the ground with its bottom set horizontally.

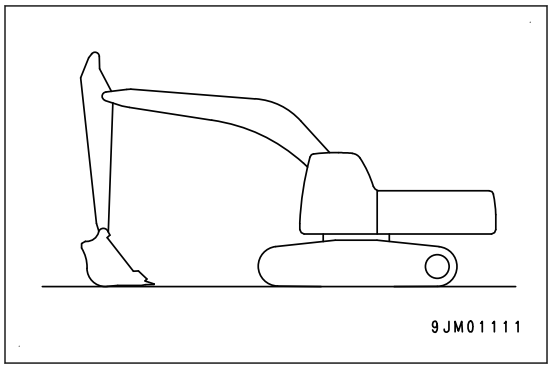

4. Operate the operating part (g) of the lock lever (3) to set it to the LOCK position (L).

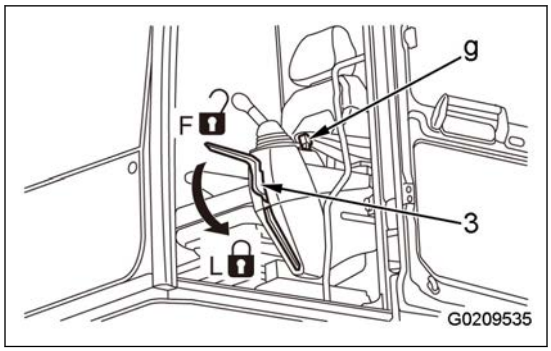

5. Examine the engine coolant temperature and engine oil pressure on the machine monitor.
   - If the engine coolant temperature gauge is in the red range, cool down the coolant until the gauge goes in the green range, and stop the engine. Then see “Troubles and Procedures (3-546)” to do the inspection and remedy.
   - If the engine oil pressure caution lamp is on, stop the engine immediately. And see “Troubles and Procedures (3-546)” to do the inspection and remedy.
6. Stop the engine.

   If the operator seat and console are in front position, move them rearward to keep a sufficient area to get off the machine.

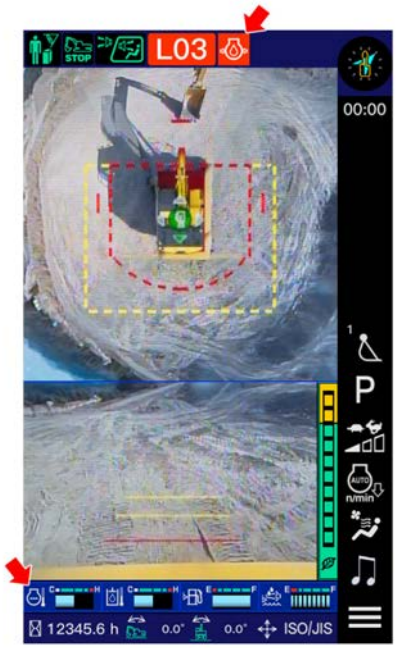

G0238613

How to Examine After You Finish Work

After the work is done and the engine stops, examine and clean the machine.

1. Do the walk-around check to make sure of the items that follow.
   - No leakage of oil or water is found.
   - No abnormality is found on the work equipment, exterior parts, and undercarriage.
   - No collection of dirt or flammable material is found.

   For details, see Operation, “Walk-Around Check (3-201)”.

   If a problem is found, repair it.
2. To prevent water formation in the fuel tank because of condensation caused by the moisture in the air, fill the tank with fuel.
3. Remove dirt around the undercarriage.

Lock

Position to be Locked

Be sure to lock the parts that follow.

(1) Operator cab door

Be sure to close the windows.

(2) Fuel tank filler port cap

(3) Engine hood

(4) Tool case cover

(5) Cover at left side of machine

(6) Cover at right side of machine

(7) Hydraulic tank oil filler port cap

(8) Air conditioner fresh air filter intake port cover

(9) DEF tank filler port cover

(10) Battery disconnect switch

REMARK

Lock the battery disconnect switch (10) when the operator ID setting or operator ID authentication setting is OFF.

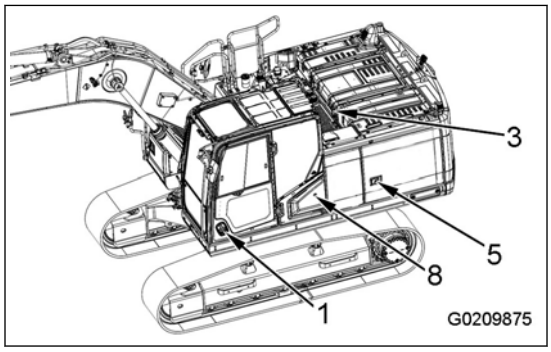

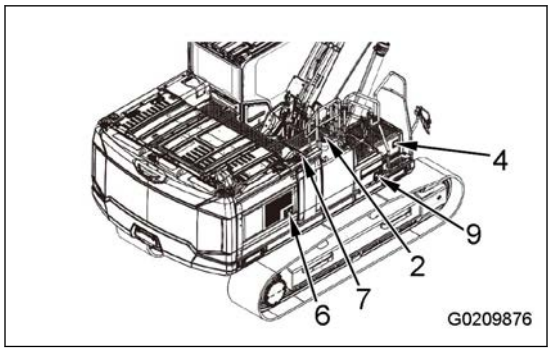

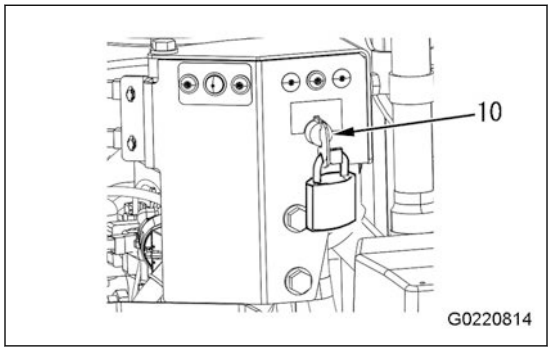

How to Open and Close Cap with Lock

Procedure to Open Cap with Lock

1. Insert the key into the key slot.
2. Turn the key clockwise, and align the match marks (1) of the key slot and cap to open the cap.

   Position (A): OPEN

   Position (B): CLOSE (LOCK)

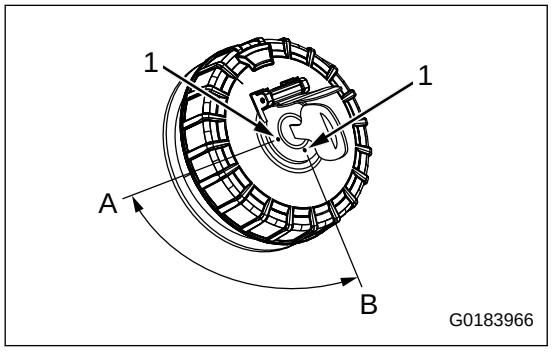

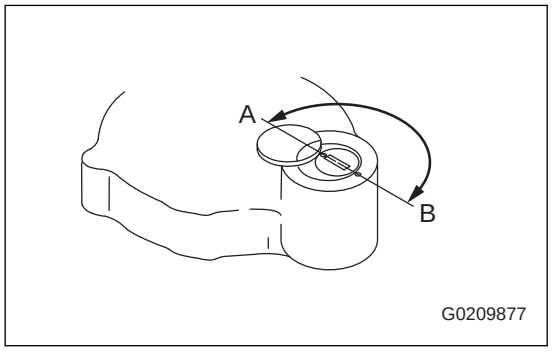

Procedure to Lock Cap with Lock

1. Thrust in the cap and insert the key into the key slot.
2. Turn the key to the “CLOSE” position (B), and remove it.

How to Open and Close Cover with Lock

Procedure to Open Cover with Lock

1. Insert the key into the key slot.
2. Turn the key counterclockwise and pull the cover handle.

   Position (A): OPEN

   Position (B): CLOSE (LOCK)

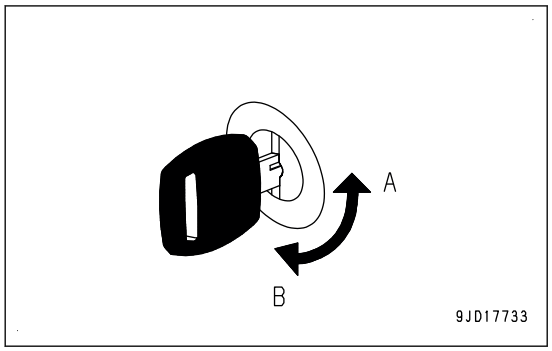

3. If there is a stay to hold the cover, open the cover until the stay is put in the LOCK position.

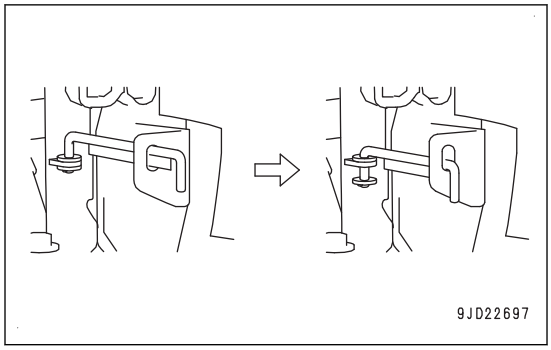

Procedure to Lock Cover with Lock

1. If a stay for cover support is available, lift the stay from the LOCK position.
2. Close the cover and insert the key into the key slot.
3. Turn the key clockwise and remove it.

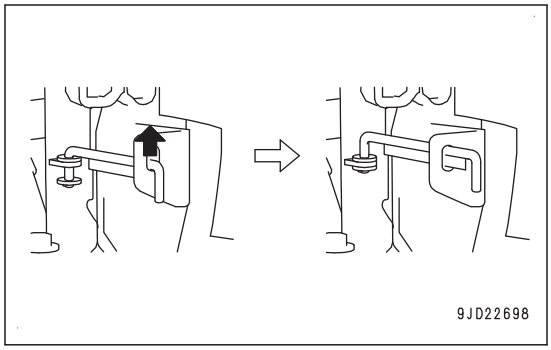

How to Open and Close Engine Hood

⚠ CAUTION

- **When opening or closing the engine hood, place the machine on a level ground, lower the work equipment to the ground, stop the engine, then perform the operation.**
- **When opening the engine hood, do not release the handle until the stay is set in the lock position securely.**
- **When closing the engine hood, hold the handle securely since the engine hood may move down because of its weight.**
  If the engine hood is not locked, it may close suddenly because of wind, etc.
- **Immediately after the engine is stopped, the engine hood and aftertreatment devices are still hot. Accordingly wait until they have cooled down before opening or closing the engine hood.**

Procedure to Open Engine Hood

1. Lower the work equipment to the level ground, and stop the engine.
2. Insert the key into the key slot.
3. Turn the key counterclockwise (A), and remove it.

   Position (A): OPEN

   Position (B): CLOSE (LOCK)
4. Pull the lever grip (1) to your side to remove the lower parts of the right and left levers from the hook.
5. Similarly, remove the left lever from the hook with the procedure of step 4.
6. Hold the handle (2), and pull up the engine hood.

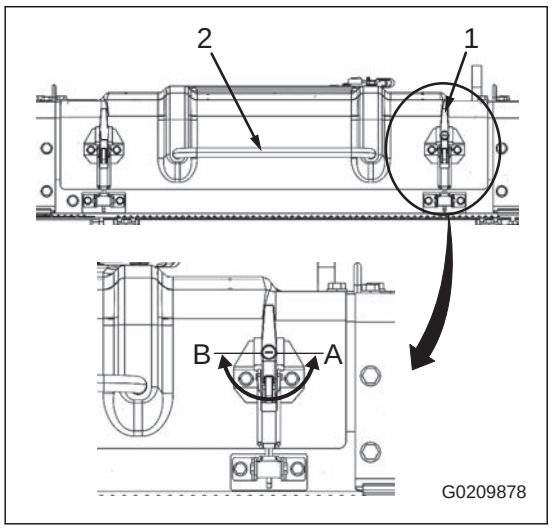

7. Put the stay (3) in the middle position (4) securely.

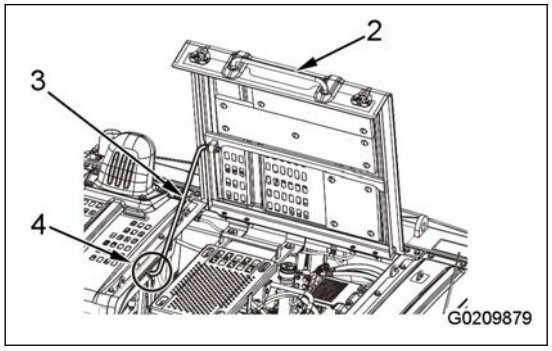

8. Lock the engine hood securely as follows.
   1) Tilt the engine hood rearward. Move the stay (3) from position (4) to position (5).

      REMARK

      A detent is put at position (8) of the guide groove (9) so the stay will not move back in the closed direction after the engine hood is fully opened.

      (5): Stay position when fully open

      (6): Stay position when a force is applied in the direction to open the hood by headwind or such

      (7): Stay position when a force is applied in the direction to close the hood by tailwind or such
   2) Set the stay (3) to the LOCK position (5).

      Be sure to do this as the stay is not locked in position (4).

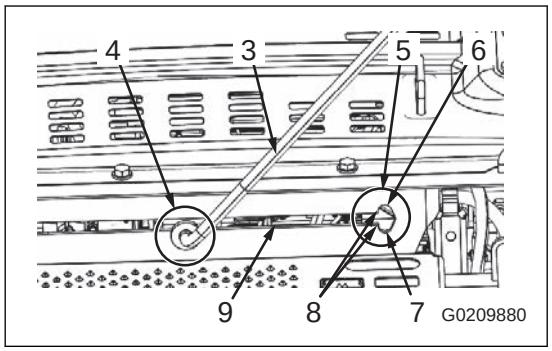

Procedure to Lock Engine Hood

1. Hold the handle (2) and hold the engine hood.
2. Make sure that the stay (3) is set in the guide groove (9), and then lower the engine hood.

⚠ CAUTION

Do not lower the engine hood by force while the stay (3) is not set in the guide groove (9). The stay (3) can be deformed.
Do not release the handle (2) until the engine hood is lowered fully.

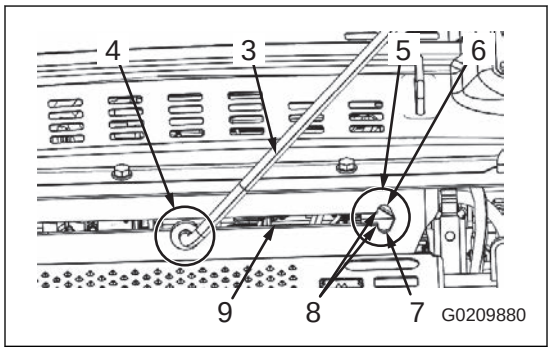

3. Hang the lower part of the right and left levers on the hook, push the lever grip (1) to the end, and close the hood.
4. Insert the key into the key slot.
5. Turn the key clockwise (B) and remove it.
   Position (A): OPEN
   Position (B): CLOSE (LOCK)

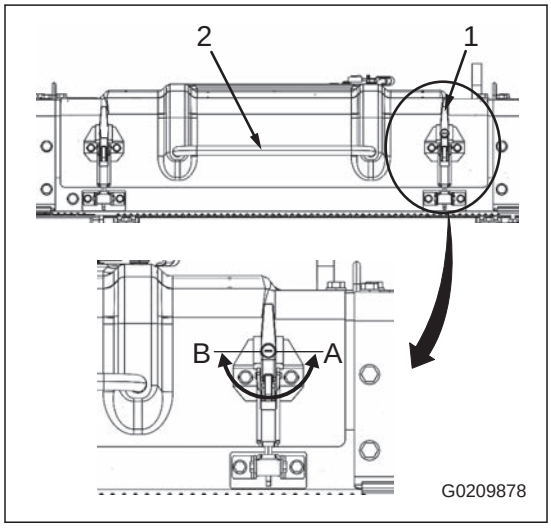

How to Open and Close DEF Tank Filler Port Cover

⚠ CAUTION

- **Before you open or close the DEF tank filler port cover, lower the work equipment to a level area, and stop the engine.**
- **Fix the cover when you open it. If the cover is not fixed, it can close suddenly by wind or such.**

Procedure to Open DEF Tank Filler Port Cover

1. Lower the work equipment to the level ground, and stop the engine.
2. Insert the key into the key slot.
3. Turn the key clockwise, and remove it.
   Position (A): OPEN
   Position (B): CLOSE (LOCK)

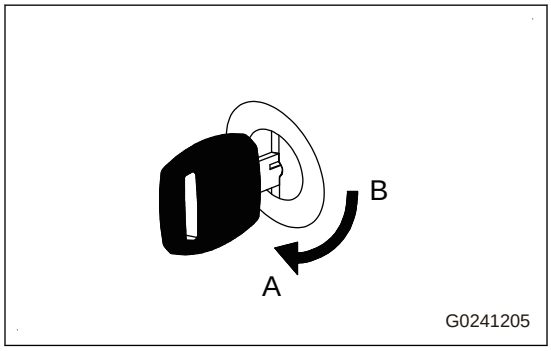

4. Hold the grip (2) of the cover while you push the filler port cover open knob (1), and open the cover.

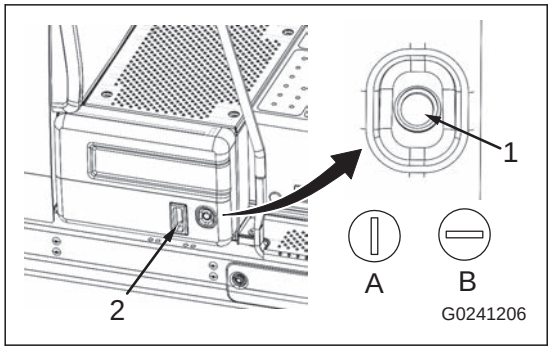

5. Engage the lock stay (3) to fix it in the cover-locked position.

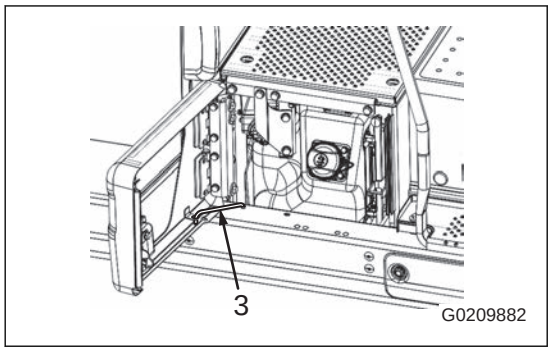

Procedure to Lock DEF Tank Filler Port Cover

1. Remove the lock stay (3) and close the cover.

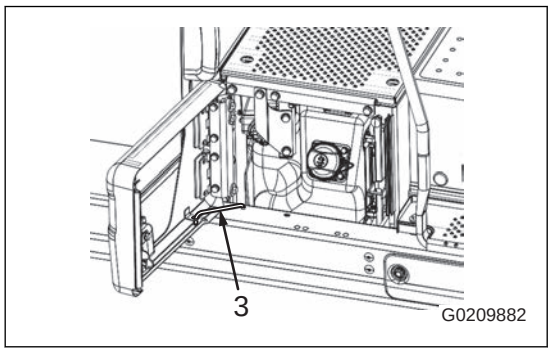

2. Turn the key counterclockwise to lock, and remove the key.

   Position (A): OPEN

   Position (B): CLOSE (LOCK)

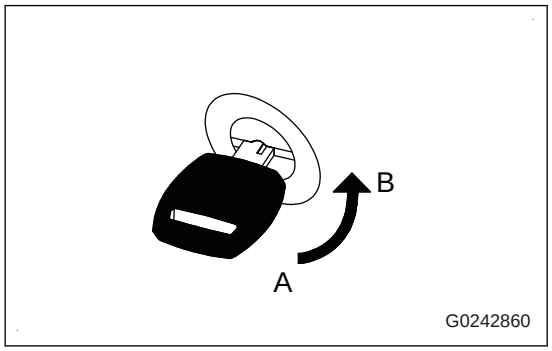

How to Open and Close Operator Cab Door Lock

When You Open Door (When Locked)

1. Insert the key into the key slot.
2. Turn the key counterclockwise to unlock the key, and open the door.

   Position (A): OPEN

   Position (B): CLOSE (LOCK)

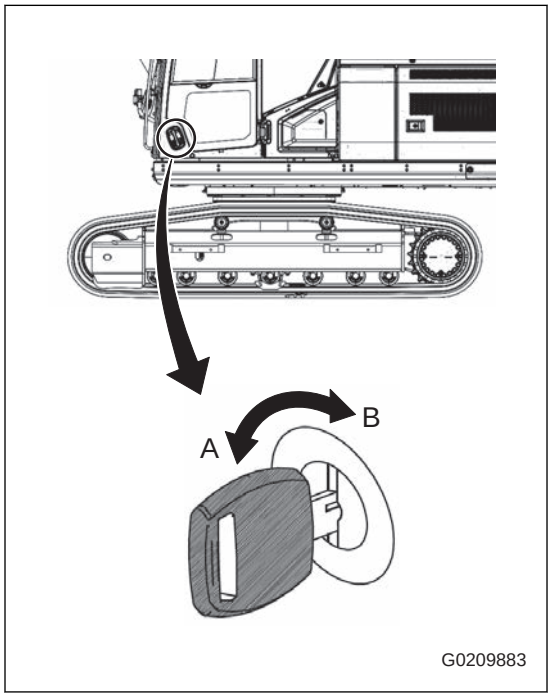

REMARK

When you unlock the door lock, make sure that it is at the position (A) when you pull out the key. If you remove the key at a position other than the “OPEN” position (A), the door can be locked unintentionally.

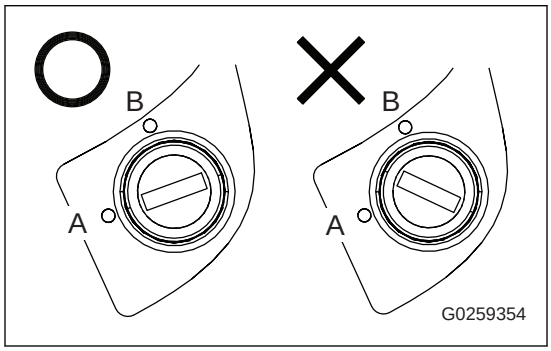

When You Lock Door

1. Close the door, and insert the key into the key slot.
2. Turn the key to the “CLOSE” position (B), and remove it.

Handle Operator ID

This machine does operator authentication when the operator logs on with an operator ID.

For the procedure of the operator authentication, see “Basic Operation of Machine Monitor When You Start Engine in Normal Situation (3-10)”.

Each Operator Setting

For the items below, the settings are stored for each operator ID. The same settings are taken over the next time the same operator logs on.

Joystick pattern settings

The joystick pattern can be set as desired for each operator.

The setting can be selected from 2 types: “ISO/JIS Pattern” and “BH (Backhoe Pattern)”.

For the setting, see “Work Equipment Control Lever (3-146)”.

Lever switch settings

The work equipment control lever switch allocations can be set as desired for work content and each operator.

For the setting, see “Lever Switch Assignment (3-58)”.

Work equipment and swing maximum speed settings

The operation speed of the machine can be set as desired for each operator.

“Boom speed”, “Arm speed”, “Bucket speed”, and “Swing speed” can be adjusted.

For the setting, see “Speed Adjustment (3-71)”.

Balance between boom RAISE speed and swing speed

The balance between the boom RAISE speed and swing speed can be set as desired for each operator.

For the setting, see “Adjustable Priority (3-71)”.

Lever response settings

The response of the levers can be set as desired for each operator.

For the setting, see “Response Adjustment (3-72)”.

Object avoidance settings

The detection target of the object avoidance (people/people + objects), ON/OFF of the buzzer when a target is sensed, and ON/OFF of the machine stop control can be set as desired for each operator.

For the setting, see “Object Avoidance (3-350)”.

Travel heading indicator settings

The angle at which the track orientation is judged as reversed, and ON/OFF of the buzzer to tell that the track orientation is reversed after the operator ID authentication can be set as desired for each operator.

For the setting, see “How to Set Travel Heading Indicator (3-44)”.

Rollover avoidance settings

For the rollover avoidance, ON/OFF of the buzzer to tell the occurrence of a warning area can be set as desired for each operator.

For the setting, see “How to Set Rollover Avoidance (3-47)”.

Working mode at startup settings

The working mode at the startup of the machine can be set as desired for each operator.

For the setting, see “Working Mode at Startup Setting (3-70)”.

Set 2D boundary control

You can set the ON/OFF of the buzzer for each operator when the work equipment is decelerated or stopped with the 2D boundary control.

For the setting, see “2D Boundary Control (3-370)”.

Set cab interference prevention

You can set the ON/OFF of the cab interference prevention for each operator.

For the setting, see “Cab Interference Prevention (3-389)”.

Monitor setting

Language settings, etc., can be set as desired for each operator.

“Language Settings”, “Brightness Adjustment”, “Video Quality Adjustment”, and “12 hour Display” can be adjusted.

For the setting, see “Operator and Monitor Setting (3-93)”.

Attachment Setting

In the machine monitor, you can do the operations that follow.

- Change the attachment
- Change the name
- Change the attachment type
- Adjust the shape
- Adjust weight
- Adjust the flow rate of ATT1 and ATT2

The attachment data is linked between the machine monitor and ICT monitor, but the items that can be set on each monitor are different.

Items That can be Changed on Machine Monitor and ICT Monitor

Item	Machine monitor	ICT Monitor
Change the attachment	○	○
Change the name	○	○
Change the attachment type	○	○
Adjust the shape	○	○
Change the tooth length (*1)	×	○
Adjust weight	○	○
Import/export data	×	○
Adjust the flow rate of ATT1 and ATT2	○	×

(○: Can be changed, ×: Cannot be changed)

*1: The machine monitor does not have a function to automatically correct the value input in the shape adjustment when the tooth length is changed because of replacement or wear. When you change the tooth length, measure the tooth length and related dimensions such as the bucket contour point on the “Shape Adjustment” screen again, and input them.

For the hydraulic oil pressure setting to the attachment with the attachment control specifications, consult your Komatsu distributor.

If you do not use the 2D/3D machine control, 3D boundary control, 2D boundary control, auto swing, and cab interference prevention, you do not need to input “Shape Adjustment” and “Tooth Length” correctly.

NOTICE

“Weight Adjust” makes a difference in machine control. To get correct controllability and behavior, set the correct weight.

Attachment Icon

The attachment icon shows the currently selected attachment.

Attachment setting is a function that registers and changes the information of attachments to be used, such as the flow rate and dimensions. After the information for attachments is registered, you can select or change the attachment to use on the machine monitor the next time.

NOTICE

If you do the work while the attachment type is not set correctly, it can cause damage to hydraulic component.
Example: When you do breaker work, be sure to set the attachment type to breaker.

Attachment to Be Set

There are 15 types of attachments to be set as follows.

Icon	Attachment type
G0223954	No attachment
G0223955	Standard bucket
G0223956	Slope bucket
G0223957	Trapezoidal bucket
G0223958	Tilt bucket (Guidance and machine control using IMU sensor can be used only for machines with 3D machine guidance or 3D machine control specification.)
G0223959	Breaker (side mount type)
G0223960	Breaker (top mount type)
G0223961	Twin header (1 way)
G0223961	Twin header (2 way)
G0223962	Compactor (1 way)
G0223962	Compactor (2 way)
G0223963	Grapple (lateral)

Icon	Attachment type
G0223963	Grapple (vertical)
G0223964	Ripper
G0223965	Others

How to Change Attachment

1. Tap the attachment icon.

   REMARK

   The attachment icon changes in response to the selected attachment. For the display of the attachment icon for each attachment, see “Attachment to Be Set (3-301)”.

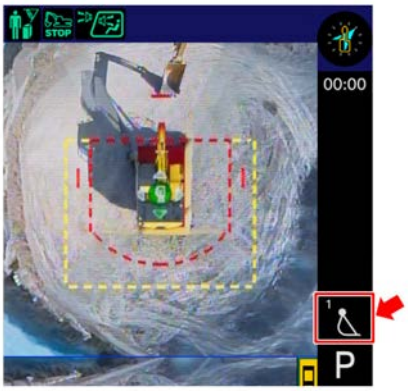

G0238614

2. Select the tab that includes the attachment to be used and tap the attachment to be used.

   The attachments are shown in 5 tabs (1), 4 attachments in each tab.

   REMARK

   A total of 20 attachments can be set.

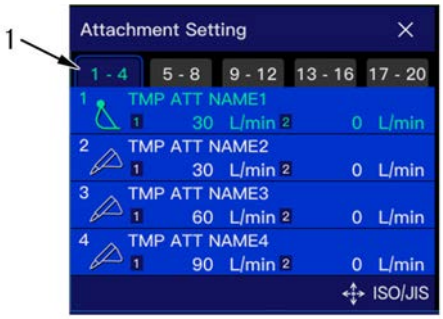

G0228926

3. See the details of the selected attachment. Tap the check-mark button.

REMARK

If an attachment with a 1-way flow path setting is selected, the buzzer operates to give a warning, and the background color changes to yellow.

G0261372

How to Edit Attachment Setting

1. Tap the attachment icon.

REMARK

The attachment icon changes in response to the selected attachment. For the display of the attachment icon for each attachment, see “Attachment to Be Set (3-301)”.

2. Tap the attachment to edit the setting.

G0238614

3. Tap the edit button.

REMARK

When you hold down the attachment to edit the setting, the screen changes to the setting change screen.

If the usage limitation is set to ON and you are not logged on with the administrator ID, input the administrator setting passcode.

For the usage limitation, see “Supervisor Setting (3-110)”.

For the supervisor ID, see “Operator ID Management (3-104)”.

G0261373

- Tap the name (2) to change the name of the attachment.
- Tap the attachment type (3), and you can change the attachment type.
  For the attachment type to be set and icon, see “Attachment to Be Set (3-301)”.

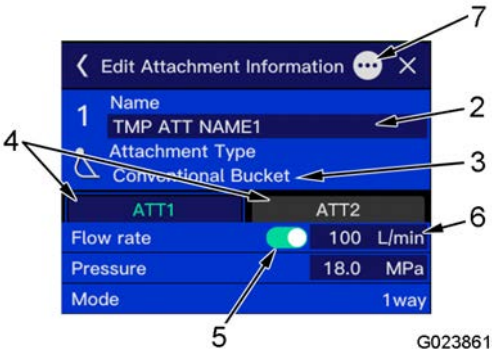

G0238615

REMARK

You cannot change the first attachment and currently selected attachment type.
If the attachment type is changed, the set information related to the attachment is initialized.

- Name
- Attachment flow rate and pressure setting
- Weight
- Shape
- Final update date

- Tap the tab (4) to change the display to ATT1 or ATT2.
- Tap attachment oil flow rate ON/OFF (5) to change the ON or OFF of the attachment oil flow rate.

  ON: Hydraulic oil flows to the attachment.

  OFF: Hydraulic oil does not flow to the attachment.

  Tap flow rate (6) to change the screen to the attachment oil flow rate setting screen. Set the flow rate with the down button (8) and up button (9).

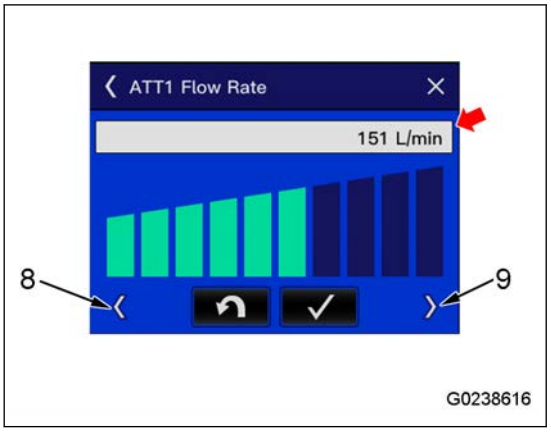

  Or tap the flow rate value to input. After the input is completed, tap the OK button.

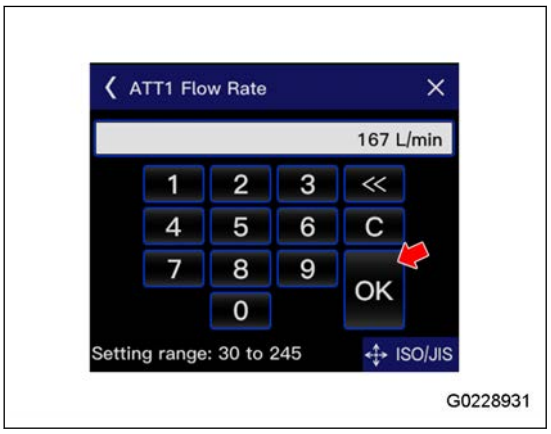

- Tap advanced settings (7) to change the screen to the attachment advanced setting screen.

Attachment Advanced Setting

The settings below can be changed in the attachment advanced setting.

- Weight Adjust
- Shape Adjustment

REMARK

The right side of the item shows the set weight and the update date.

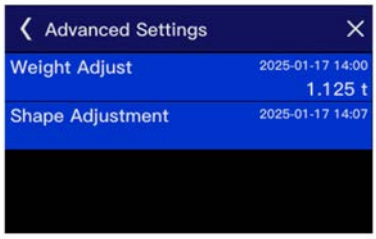

G0247356

Change in Weight Adjustment

NOTICE

The set weight value makes a difference in machine control. To get correct controllability and behavior, the correct weight must be set.

1. Tap “Weight Adjust”.
2. Input the weight on the weight input screen. After the input is completed, tap the OK button.

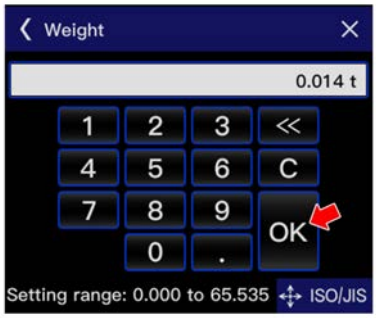

G0228934

Change Shape Adjustment

You can adjust the shape of the attachment type on “Shape Adjustment” screen.

The input screen for shape adjustment is different by the attachment type (For the other input screens, see the input screen of the standard bucket).

For how to adjust the shape of the quick coupler, see “Shape Setting of Quick Coupler (6-8)”.

REMARK

When the ICT monitor is installed, the shape adjustment cannot be changed on the machine monitor. Use the ICT monitor to change the shape adjustment.
For how to change the shape adjustment on the ICT monitor, see “Change Shape Adjustment” in the Operation and Maintenance Manual for 3D Machine Control.

⚠ CAUTION

- **When you do the calibration, move the machine to a level and hard ground such as on concrete. (Inclination angle: 5° or below)**
- **Do not go near the machine unless necessary. When you go near the machine, obey the precautions that follow to secure safety.**
  - **Give a notification to the worker who operates the machine.**
  - **Make sure that the worker who operates the machine sets the lock lever to the LOCK position, and gives a hand signal before you go near the machine.**
- **Do not jump when you get on or off the machine, and hold yourself at three-point contact.
  Use a support tool such as a stand if necessary.**
- **After the calibration is started, set the swing lock switch to the ON (LOCK) position, and do not do the swing operation.**
- **The play of the connection part can cause effect to the precision of the machine control. If the play is large, install shims or do other remedies to reduce the play.**
- **Some attachments have a rough shape, and the dimensions are hard to measure directly. In such cases, use the measurement tools or total station to measure the dimensions projected in the measurement direction.**
- **The machine control operates at the input contour point. Even if the machine model touches the design surface, the control is not applied to the area protruded from the contour point.**

Prepare Shape Adjustment

Prepare the tools that follow when you do the calibration.

- Convex rule, tape scale (steel product)
- Plumb bob (A laser level gauge can be used as an alternative.)
- Level gauge (A laser level gauge can be used as an alternative.)
- Digital angle gauge
- Marker (to put a mark on the bucket shape recognition point)
- Tool set of magnet pole

  (A) Magnet base

  (B) Pole

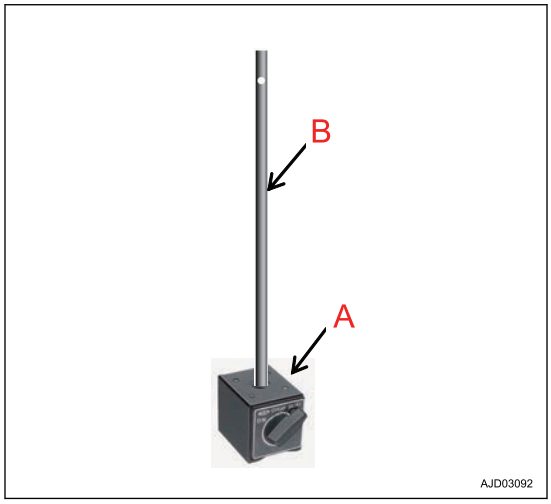

When you do the calibration (to measure the bucket shape in particular), you must use a special device such as a magnet pole. If you install a new bucket, consult your Komatsu distributor for replacement calibration.

You can do the measurement without special instruments, but the precision of the bucket edge cannot be sufficient. If the high precision construction is required, consult your Komatsu distributor.

Shape Adjustment of Standard Bucket and Others

Measure/input dimension

Measure the length dimension to mm unit, and angle to 0.1º unit.

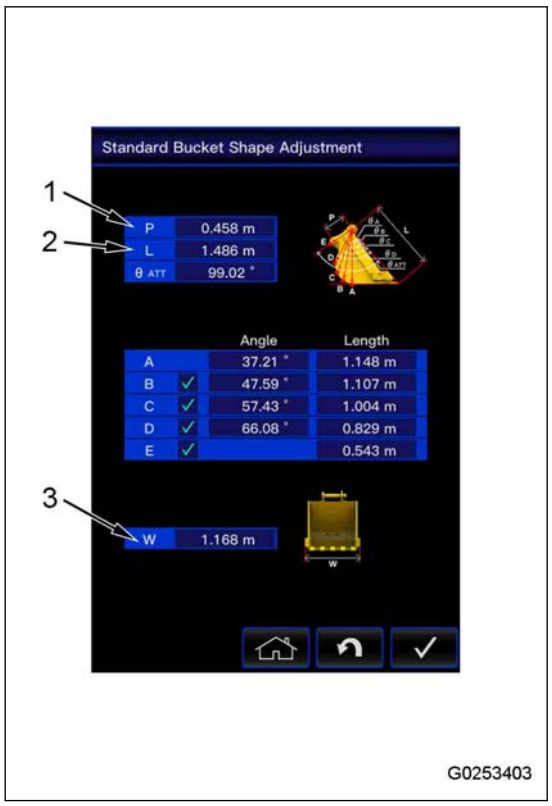

Input (1) P, (2) L, (3) W

Measure the dimensions that follow with a measuring instrument such as a steel scale.

(1) P: Distance between bucket pin center (4) and bucket link pin center (5)

(2) L: Distance between bucket pin center (4) and bucket edge

(3) W: Distance between bucket side cutter bottom
For the bucket without the side cutter, measure the dimension of the widest part, and input the value.

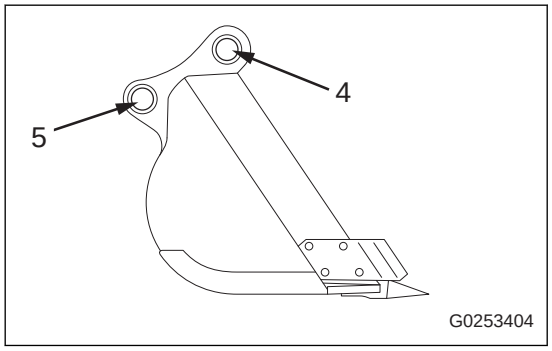

How to Measure Bucket Foot Angle and Contour Point of Standard Bucket

1. Put the marks with the marker at the 5 points of the bucket contour points (A) to (E).
   - The bucket contour point (A) is the intersection point of the straight part of the bucket bottom and corner.
     If you cannot judge the straight part of the bucket bottom and corner easily, use the point to be touched on the ground during the digging operation.
   - The bucket contour point (E) is the outermost part on the straight line extension of the bucket pin and bucket link pin.
   - Set the bucket contour points (B), (C), and (D) to the positions where the recognition points (A) and (E) are put equally.
2. Set the magnet pole tool (4) to the bucket pin.

   Set the center of the bucket pin to be aligned with the center of the magnet pole.
3. Install the plumb bob (6) to the magnet pole tool (4), and set the bucket edge and bucket pin vertically.
4. Measure the points to be measured at (A) to (E) and distance between the centers of the magnet pole tools (4), and then input them in length (2).
5. Put the steel scale (3) to the magnet pole tools (4) and points to be measured at (A) to (E).
6. Set the digital angle gauge (7) on the steel scale (3), measure the angle (1) at (A) to (E).

   The angle (1) at (A) to (E) is the angle of each point of (A) to (E) from the horizontal line.

   Input the angle (E) (= bucket foot angle) in θ_{ATT}.

   When the steel scale (3) is below the horizontal line of the bucket pin

   Subtract the angle (8) from 90°, and input the value as the angle (5) of the bucket contour point.

   When the steel scale (3) is above the horizontal line of the bucket pin

   Add the angle (8) to 90°, and input the value as the angle (5) of the bucket contour point.

   REMARK

   If the work equipment is in the air, it lowers by hydraulic drift of the work equipment.
   When you measure the bucket contour point, make sure that the plumb bob (6) is set vertically from time to time.

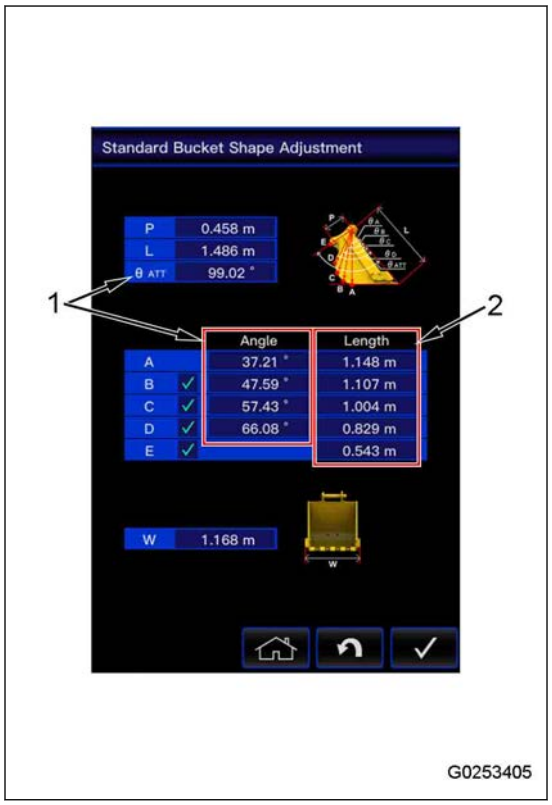

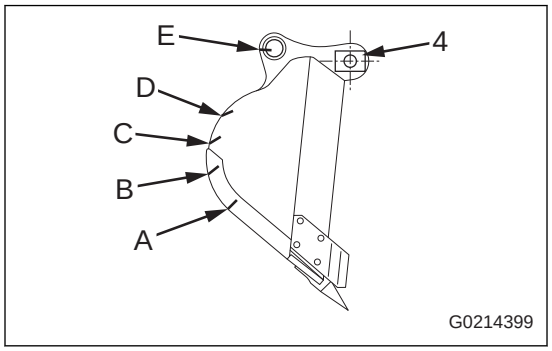

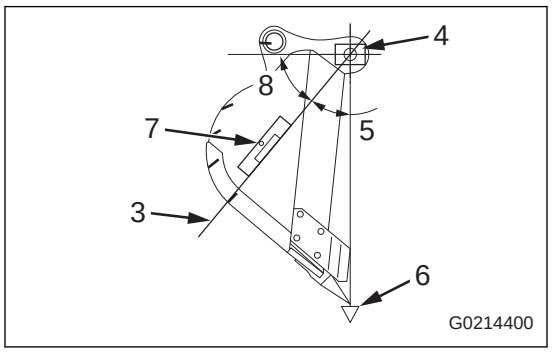

Complete Shape Adjustment

After you complete the input of each parameter, tap the checkmark button to complete the editing.

Shape Adjustment of Slope Bucket

Measure/input dimension

Measure the length dimension to mm unit, and angle to 0.1° unit.

Input length parameter

Measure the dimensions that follow with a measuring instrument such as a steel scale.

(1) P: Distance between bucket pin center (7) and bucket link pin center (8)

(2) L: Distance between bucket pin center (7) and bucket edge

(3) W: Dimension of widest part

(4)L_A: Distance between bucket edge and back edge (9)

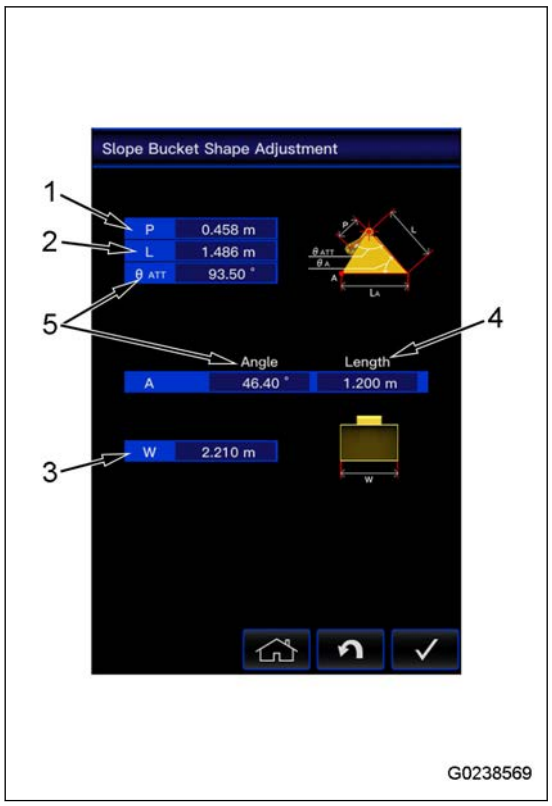

Input Angle Parameter

You can measure “Angle” parameter (5) as follows.

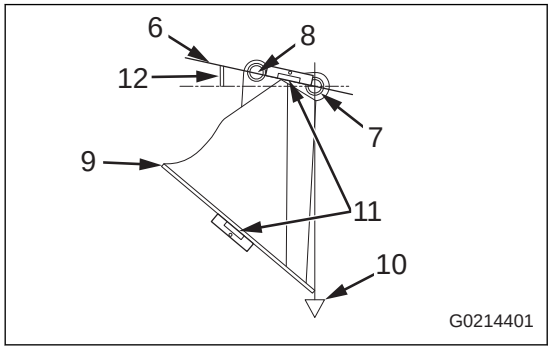

1. Set the magnet pole tool to the bucket pin.

   Set the center of the bucket pin to be aligned with the center of the magnet pole.

2. Install the plumb bob (10) to the magnet pole tool, and set the bucket edge and bucket pin vertically.

3. Set the digital angle gauge (11) on the bottom plate, and measure θ_A.

   Subtract the display value from 90°, and input the value in θ_A.

4. Put the steel scale (6) between the bucket pin center (7) and bucket link pin center (8).

5. Set the digital angle gauge (11) on the steel scale (6), and input the value in θ_{ATT}.

   When the steel scale (6) is below the horizontal line of the bucket pin

   Subtract the angle (12) from 90°, and input the value in θ_{ATT}.

   When the steel scale (6) is above the horizontal line of the bucket pin

   Add the angle (12) to 90°, and input the value in θ_{ATT}.

   REMARK

   If the work equipment is in the air, it lowers by hydraulic drift of the work equipment.
   When you measure the bucket contour point, make sure that the plumb bob (10) is set vertically from time to time.

Complete Shape Adjustment

After you complete the input of each parameter, tap the checkmark button to complete the editing.

Shape Adjustment of Trapezoidal Bucket

Measure/input dimension

Measure the length dimension to mm unit, and angle to 0.1° unit.

Input length parameter

Measure the dimensions that follow with a measuring instrument such as a steel scale.

(1) P: Distance between bucket pin center (12) and bucket link pin center (13)

(2) L: Distance between bucket pin center (12) and bucket edge

(3) W_1: Dimension of width of bucket edge part

(4) W_2: Dimension of widest part

(5) L_A: Straight length of bucket bottom

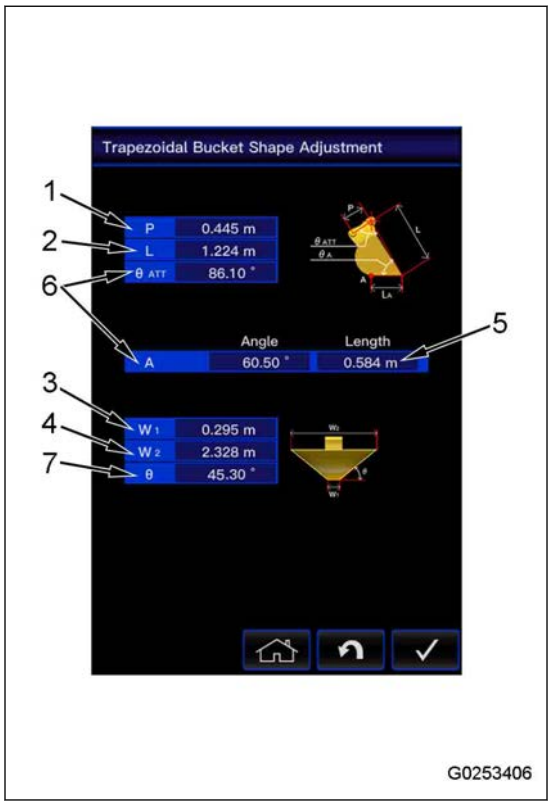

Input Angle Parameter

You can measure “Angle” parameter (6) as follows.

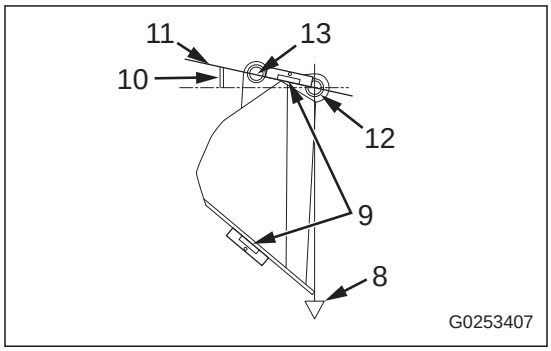

1. Set the magnet pole tool to the bucket pin.

   Set the center of the bucket pin to be aligned with the center of the magnet pole.
2. Install the plumb bob (8) to the magnet pole tool, and set the bucket edge and bucket pin vertically.
3. Set the digital angle gauge (9) on the bottom plate, and measure θ_A.

   Subtract the display value from 90°, and input the value in θ_A.
4. Put the steel scale (11) between the bucket pin center (12) and bucket link pin center (13).
5. Set the digital angle gauge (9) on the steel scale (11), and input the value in θ_{ATT}.

   When the steel scale (11) is below the horizontal line of the bucket pin

   Subtract the angle (10) from 90°, and input the value in θ_{ATT}.

   When the steel scale (11) is above the horizontal line of the bucket pin

   Add the angle (10) to 90°, and input the value in θ_{ATT}.

   REMARK

   If the work equipment is in the air, it lowers by hydraulic drift of the work equipment.
   When you measure the bucket contour point, make sure that the plumb bob (8) is set vertically from time to time.

Θ: Keep the bucket bottom horizontally, put the digital angle gauge (9) on the trapezoidal part to measure the angle of inclination (7), and input the value as shown in the figure.

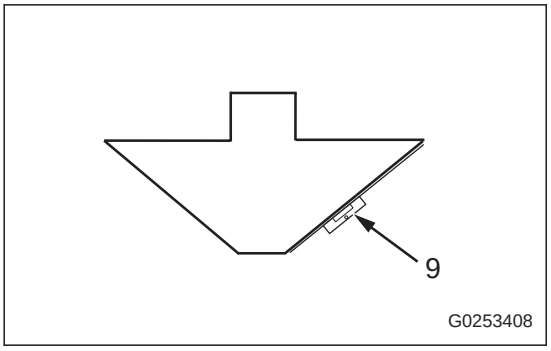

Complete Shape Adjustment

After you complete the input of each parameter, tap the checkmark button to complete the editing.

Shape Adjustment of Tilt Bucket

Guidance and machine control using IMU sensor can be used only for machines with 3D machine guidance or 3D machine control specification.

Measure/input dimension

Measure the length dimension to mm unit, and angle to 0.1º unit.

NOTICE

Before you start the next measurement, set the axis direction of the bucket pin center in parallel with the bucket edge (tilt angle 0°).

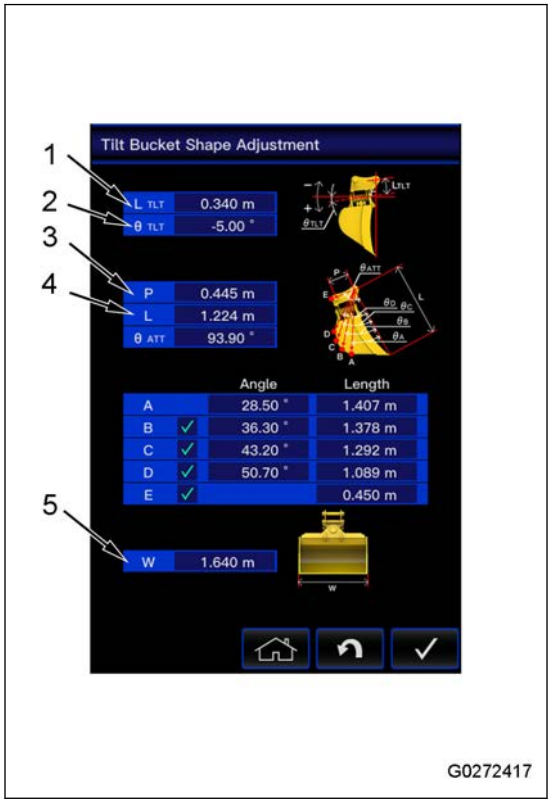

Input (1) L_{TLT}, (2) θ_{TLT}

1. Set the magnet pole tool (6) to the bucket pin.

   Set the center of the bucket pin to be aligned with the center of the magnet pole.
2. Install the plumb bob (7) to the magnet pole tool (6), and set the bucket edge and bucket pin vertically.
3. Input the distance L_{TLT}(1) between the bucket pin and tilt axis with the tape measure and plumb bob or laser level.
4. Put the digital angle gauge (8) to set the tilt axis horizontally, and input the value in θ_{TLT} (2).

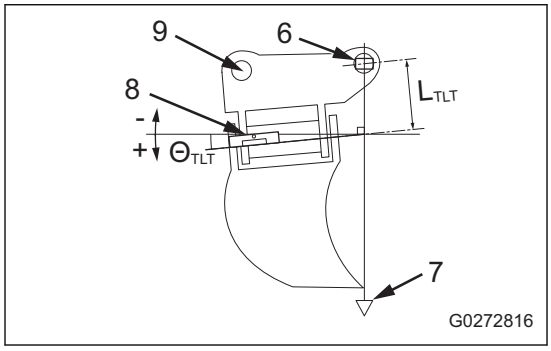

For the symbol of the angle of inclination, see the figure above or the figure on the monitor.

Input (3) P, (4) L, (5) W

(3) P: Distance between bucket pin center and bucket link pin center (9)

(4) L: Distance between bucket pin center and bucket edge

(5) W: Distance between bucket side cutter bottom (*1)

(*1): For the bucket without the side cutter, measure the dimension of the widest part, and input the value.

How to Measure Bucket Foot Angle and Contour Point of Tilt Bucket

1. Put the marks with the marker at the 5 points of the bucket contour points (A) to (E).
   - The bucket contour point (A) is the intersection point of the straight part of the bucket bottom and corner.
     If you cannot judge the straight part of the bucket bottom and corner easily, use the point to be touched on the ground during the digging operation.
   - The bucket contour point (E) is the outermost part on the straight line extension of the bucket pin and bucket link pin.
   - Set the bucket contour points (B), (C), and (D) to the positions where the recognition points (A) and (E) are put equally.
2. Set the magnet pole tool (4) to the bucket pin.

   Set the center of the bucket pin to be aligned with the center of the magnet pole.
3. Install the plumb bob (6) to the magnet pole tool (4), and set the bucket edge and bucket pin vertically.
4. Measure the points to be measured at (A) to (E) and distance between the centers of the magnet pole, and then input them in length (2).
5. Put the steel scale (3) to the magnet pole tools (4) and points to be measured at (A) to (E).
6. Set the digital angle gauge (7) on the steel scale (3), measure the angle (1) at (A) to (E).

   The angle (1) at (A) to (E) is the angle of each point of (A) to (E) from the horizontal line.

   Input the angle (E) (= bucket foot angle) in θ_{ATT}.

   When the steel scale (3) is below the horizontal line of the bucket pin

   Subtract the angle (8) from 90°, and input the value as the angle (5) of the bucket contour point.

   When the steel scale (3) is above the horizontal line of the bucket pin

   Add the angle (8) to 90°, and input the value as the angle (5) of the bucket contour point.

   REMARK

   If the work equipment is in the air, it lowers by hydraulic drift of the work equipment.
   When you measure the bucket contour point, make sure that the plumb bob (6) is set vertically from time to time.

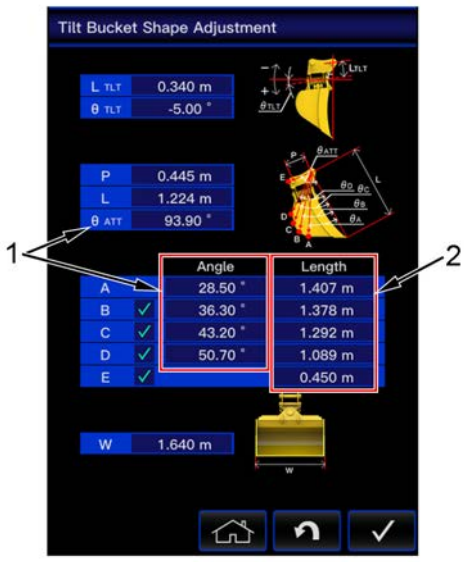

G0272418

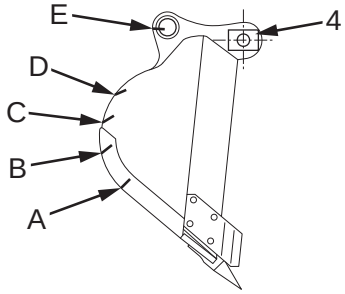

G0214399

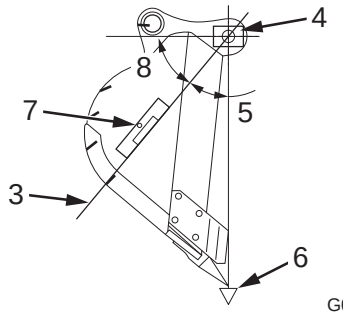

G0214400

Complete Shape Adjustment

After you complete the input of each parameter, tap the checkmark button to complete the editing.

Shape Adjustment of Breaker (Side Mount Type)

Measure/input dimension

Measure the length dimension to mm unit, and angle to 0.1° unit.

Input length parameter

Measure the dimensions that follow with a measuring instrument such as a steel scale.

(1) P: Distance between bucket pin center (10) and bucket link pin center (11)

(2) L: Distance between bucket pin center (10) and bucket edge

(3) W_1: Diameter of chisel

(4) W_2: Dimension of widest part of chisel

(5) L_A: Maximum length of chisel

(6) L_B: Distance between bucket pin center (10) and contour point B

(7) L_C: Distance between bucket pin center (10) and contour point C

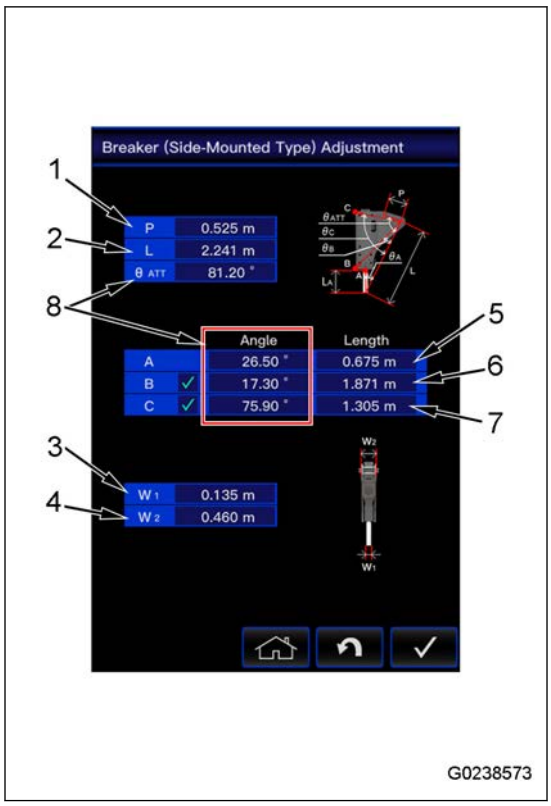

Input Angle Parameter

You can measure “Angle” parameter (8) as follows.

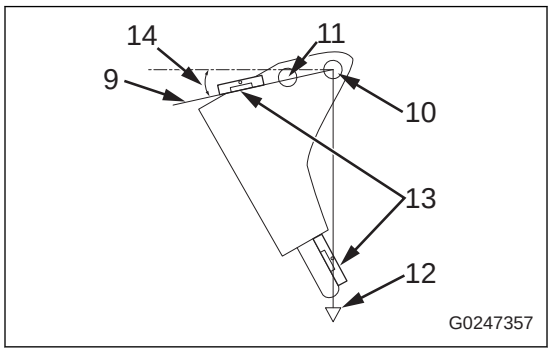

1. Set the magnet pole tool to the bucket pin.

   Set the center of the bucket pin to be aligned with the center of the magnet pole.

2. Install the plumb bob (12) to the magnet pole tool, and set the bucket edge and bucket pin vertically.

3. Set the digital angle gauge (13) on the chisel, and measure θ_A.

   Subtract the display value from 90°, and input the value in θ_A.

4. Put the steel scale (9) between the bucket pin center (10) and bucket link pin center (11).

5. Set the digital angle gauge (13) on the steel scale (9), and input the value in θ_{ATT}.

   When the steel scale (9) is below the horizontal line of the bucket pin

   Subtract the angle (14) from 90°, and input the value in θ_{ATT}.

   When the steel scale (9) is above the horizontal line of the bucket pin

   Add the angle (14) to 90°, and input the value in θ_{ATT}.

   REMARK

   If the work equipment is in the air, it lowers by hydraulic drift of the work equipment.
   When you measure the bucket contour point, make sure that the plumb bob (12) is set vertically from time to time.

6. Same as θ_{ATT}, measure the contour point θ_B and θ_C, and input the values.

Complete Shape Adjustment

After you complete the input of each parameter, tap the checkmark button to complete the editing.

Shape Adjustment of Breaker (Top Mount Type)

Measure/input dimension

Measure the length dimension to mm unit, and angle to 0.1° unit.

Input length parameter

Measure the dimensions that follow with a measuring instrument such as a steel scale.

(1) P: Distance between bucket pin center (9) and bucket link pin center (10)

(2) L: Distance between bucket pin center (9) and bucket edge

(3) W_1: Diameter of chisel

(4) W_2: Dimension of widest part of chisel

(5) L_A: Maximum length of chisel

(6) L_B: Distance between bucket pin center (9) and contour point B

(7) L_C: Distance between bucket pin center (9) and contour point C

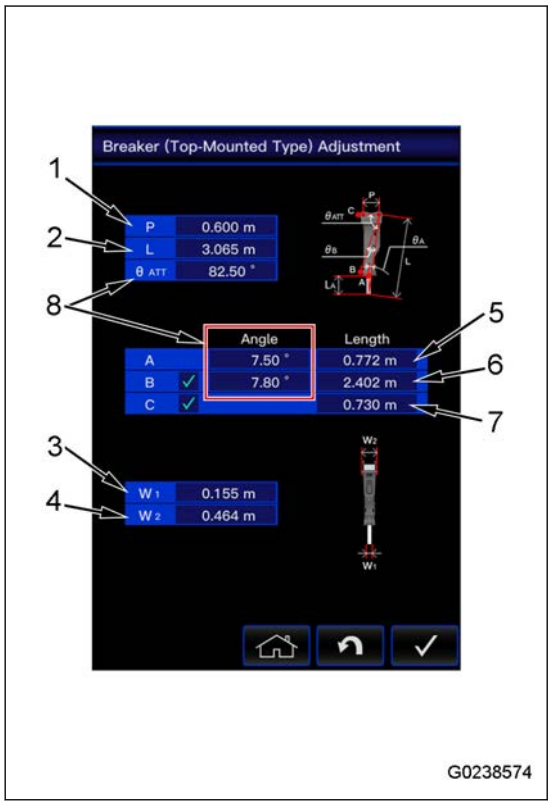

Input Angle Parameter

You can measure “Angle” parameter (8) as follows.

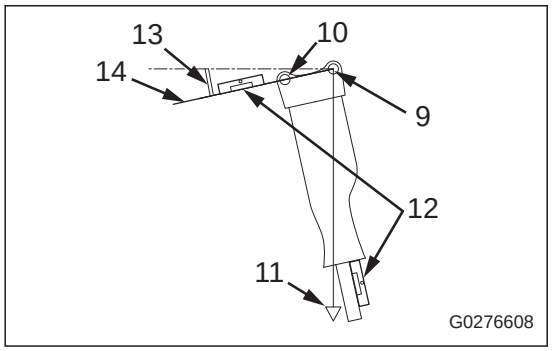

1. Set the magnet pole tool to the bucket pin.

   Set the center of the bucket pin to be aligned with the center of the magnet pole.
2. Install the plumb bob (11) to the magnet pole tool, and set the bucket edge and bucket pin vertically.
3. Set the digital angle gauge (12) on the chisel, and measure θ_A.

   Subtract the display value from 90°, and input the value in θ_A.
4. Put the steel scale (14) between the bucket pin center (9) and bucket link pin center (10).
5. Set the digital angle gauge (12) on the steel scale (14), and input the value in θ_{ATT}.

   When the steel scale (14) is below the horizontal line of the bucket pin

   Subtract the angle (13) from 90°, and input the value in θ_{ATT}.

   When the steel scale (14) is above the horizontal line of the bucket pin

   Add the angle (13) to 90°, and input the value in θ_{ATT}.

REMARK

If the work equipment is in the air, it lowers by hydraulic drift of the work equipment.
When you measure the bucket contour point, make sure that the plumb bob (11) is set vertically from time to time.

6. Same as θ_{ATT}, measure the contour point θ_B and θ_C, and input the values.

Complete Shape Adjustment

After you complete the input of each parameter, tap the checkmark button to complete the editing.

Shape Adjustment of Twin Header

Measure/input dimension

Measure the length dimension to mm unit, and angle to 0.1° unit.

Input length parameter

Measure the dimensions that follow with a measuring instrument such as a steel scale.

(1) P: Distance between bucket pin center (7) and bucket link pin center (8)

(2) L: Distance between bucket pin center (7) and bucket edge

(3) W: Maximum width of twin header

(4) Φ: Maximum diameter of twin header

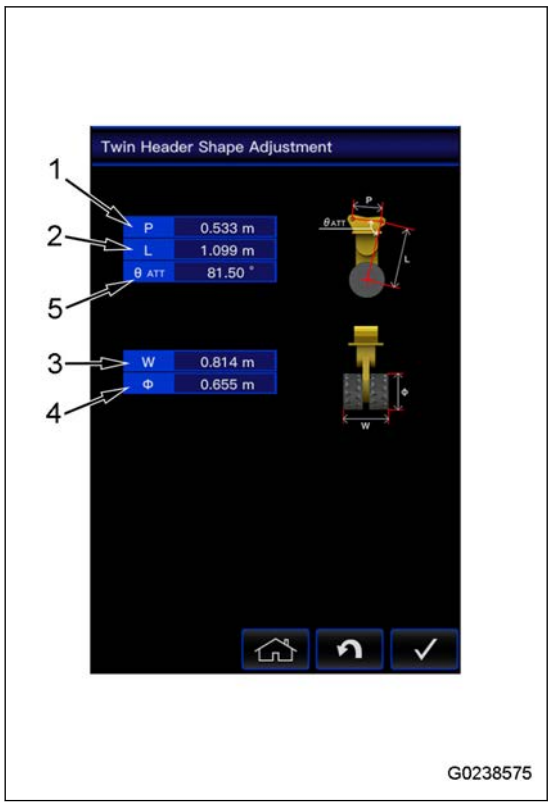

Input Angle Parameter

You can measure “Angle” parameter (5) as follows.

1. Set the magnet pole tool to the bucket pin.

   Set the center of the bucket pin to be aligned with the center of the magnet pole.
2. Install the plumb bob (9) to the magnet pole tool, and set the bucket edge and bucket pin vertically.
3. Put the steel scale (6) between the bucket pin center (7) and bucket link pin center (8).
4. Set the digital angle gauge (10) on the steel scale (6), and input the value in θ_{ATT}.

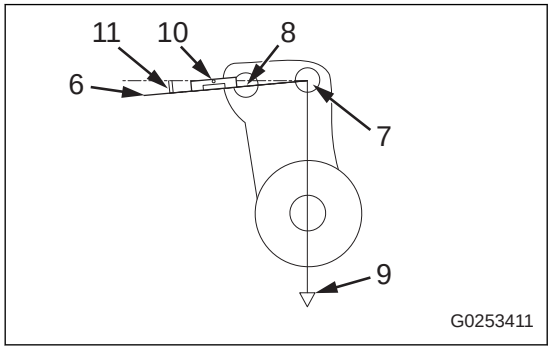

When the steel scale (6) is below the horizontal line of the bucket pin

Subtract the angle (11) from 90°, and input the value in θ_{ATT}.

When the steel scale (6) is above the horizontal line of the bucket pin

Add the angle (11) to 90°, and input the value in θ_{ATT}.

REMARK

If the work equipment is in the air, it lowers by hydraulic drift of the work equipment.
When you measure the bucket contour point, make sure that the plumb bob (9) is set vertically from time to time.

Complete Shape Adjustment

After you complete the input of each parameter, tap the checkmark button to complete the editing.

Shape Adjustment of Compactor

Measure/input dimension

Measure the length dimension to mm unit, and angle to 0.1º unit.

Input length parameter

Measure the dimensions that follow with a measuring instrument such as a steel scale.

(1) P: Distance between bucket pin center (7) and bucket link pin center (8)

(2) L: Distance between bucket pin center (7) and bucket edge

(3) W: Dimension of widest part

(4) L_A: Longitudinal length of compactor tamping surface

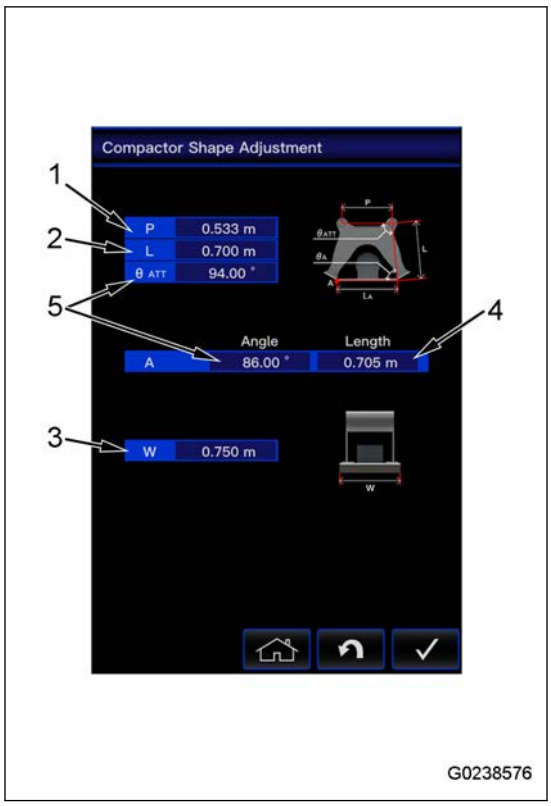

Input Angle Parameter

You can measure “Angle” parameter (5) as follows.

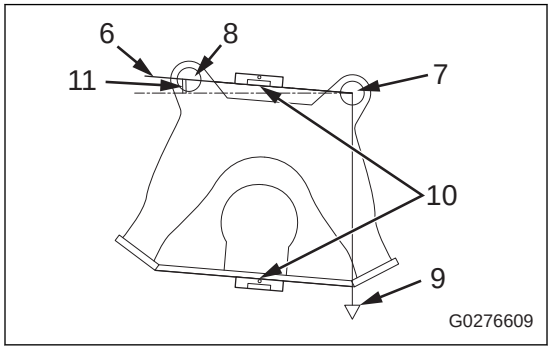

1. Set the magnet pole tool to the bucket pin.

   Set the center of the bucket pin to be aligned with the center of the magnet pole.

2. Install the plumb bob (9) to the magnet pole tool, and set the bucket edge and bucket pin vertically.

3. Set the digital angle gauge (10) on the bottom plate, and measure θ_A.

   Subtract the display value from 90°, and input the value in θ_A.

4. Put the steel scale (6) between the bucket pin center (7) and bucket link pin center (8).

5. Set the digital angle gauge (10) on the steel scale (6), and input the value in θ_{ATT}.

   When the steel scale (6) is below the horizontal line of the bucket pin

   Subtract the angle (11) from 90°, and input the value in θ_{ATT}.

   When the steel scale (6) is above the horizontal line of the bucket pin

   Add the angle (11) to 90°, and input the value in θ_{ATT}.

   REMARK

   If the work equipment is in the air, it lowers by hydraulic drift of the work equipment.
   When you measure the bucket contour point, make sure that the plumb bob (9) is set vertically from time to time.

Complete Shape Adjustment

After you complete the input of each parameter, tap the checkmark button to complete the editing.

Shape Adjustment of Lateral Grapple

Measure/input dimension

Measure the length dimension to mm unit, and angle to 0.1° unit.

Input length parameter

Measure the dimensions that follow with a measuring instrument such as a steel scale.

(1) P: Distance between bucket pin center (7) and bucket link pin center (8)

(2) L: Distance between bucket pin center (7) and bucket edge

(3) L_1: Dimension of widest part

(4) L_A: Length of grip part of grapple

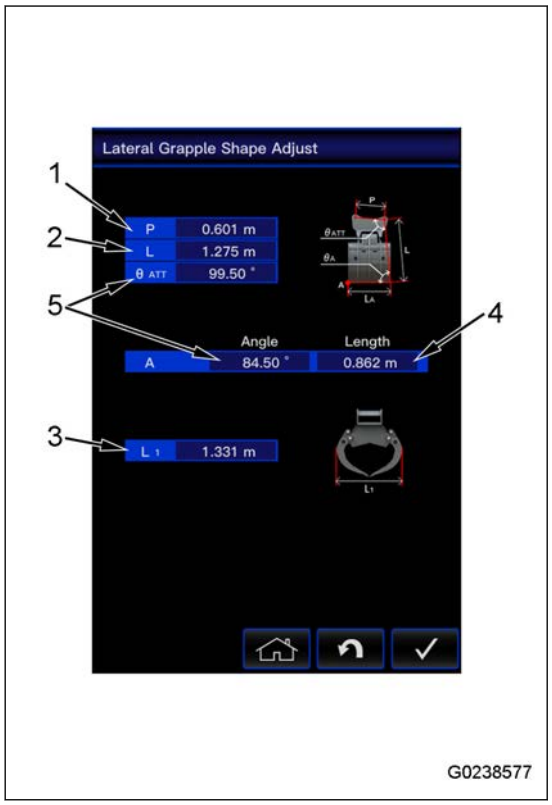

How to Input Angle Parameter

You can measure “Angle” parameter (5) as follows.

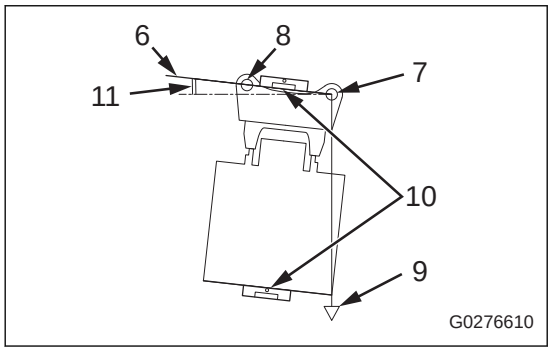

1. Set the magnet pole tool to the bucket pin.

   Set the center of the bucket pin to be aligned with the center of the magnet pole.
2. Install the plumb bob (9) to the magnet pole tool, and set the bucket edge and bucket pin vertically.
3. Set the digital angle gauge (10) on the grip part, and measure θ_A.

   Subtract the display value from 90°, and input the value in θ_A.
4. Put the steel scale (6) between the bucket pin center (7) and bucket link pin center (8).
5. Set the digital angle gauge (10) on the steel scale (6), and input the value in θ_{ATT}.

   When the steel scale (6) is below the horizontal line of the bucket pin

   Subtract the angle (11) from 90°, and input the value in θ_{ATT}.

   When the steel scale (6) is above the horizontal line of the bucket pin

   Add the angle (11) to 90°, and input the value in θ_{ATT}.

REMARK

- If the work equipment is in the air, it lowers by hydraulic drift of the work equipment.
  When you measure the bucket contour point, make sure that the plumb bob (9) is set vertically from time to time.
- When you use the lateral grapple, it is recommended to set the control/guidance points at the center.

Complete Shape Adjustment

After you complete the input of each parameter, tap the checkmark button to complete the editing.

Shape Adjustment of Vertical Grapple

Measure/input dimension

Measure the length dimension to mm unit, and angle to 0.1° unit.

Input length parameter

Measure the dimensions that follow with a measuring instrument such as a steel scale.

(1) P: Distance between bucket pin center (7) and bucket link pin center (8)

(2) L: Distance between bucket pin center (7) and bucket edge

(3) W: Dimension of widest part

(4) L_A: Outermost boundary at front

(5) L_B: Outermost boundary at rear

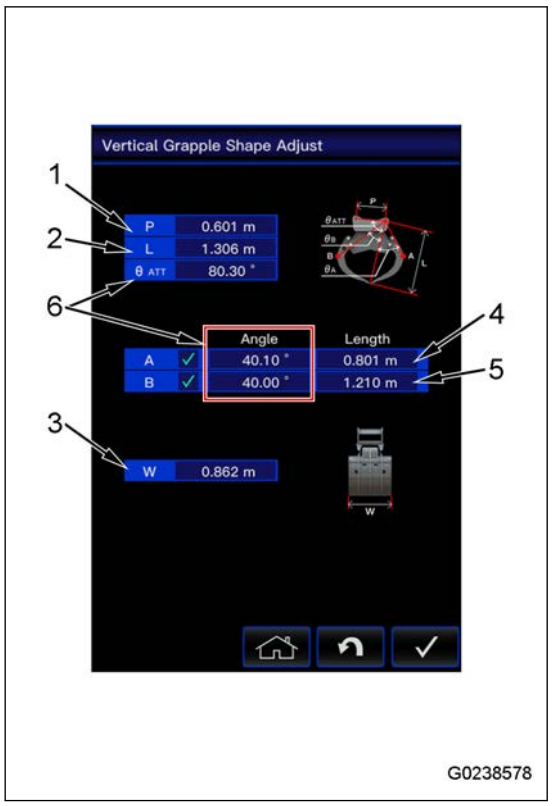

How to Input Angle Parameter

You can measure “Angle” parameter (6) as follows.

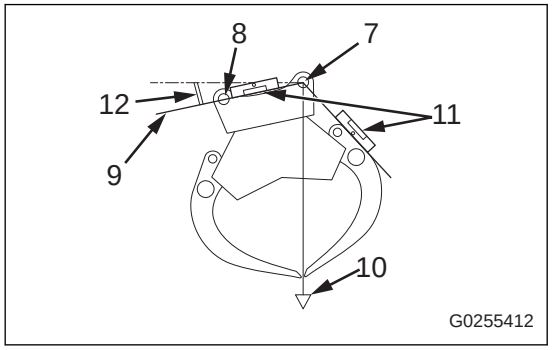

1. Set the magnet pole tool to the bucket pin.

   Set the center of the bucket pin to be aligned with the center of the magnet pole.

2. Install the plumb bob (10) to the magnet pole tool, and set the bucket edge and bucket pin vertically.

3. Put the steel scale (9) between the bucket pin center (7) and bucket link pin center (8).

4. Set the digital angle gauge (11) on the steel scale (9), and input the value in θ_{ATT}.

   When the steel scale (9) is below the horizontal line of the bucket pin

   Subtract the angle (12) from 90°, and input the value in θ_{ATT}.

   When the steel scale (9) is above the horizontal line of the bucket pin

   Add the angle (12) to 90°, and input the value in θ_{ATT}.

   REMARK

   If the work equipment is in the air, it lowers by hydraulic drift of the work equipment.
   When you measure the bucket contour point, make sure that the plumb bob (10) is set vertically from time to time.

5. Same as θ_{ATT}, measure the contour point θ_A and θ_B, and input the values. (It is no problem to input the positive value for each.)

Complete Shape Adjustment

After you complete the input of each parameter, tap the checkmark button to complete the editing.

Shape Adjustment of Ripper

Measure/input dimension

Measure the length dimension to mm unit, and angle to 0.1º unit.

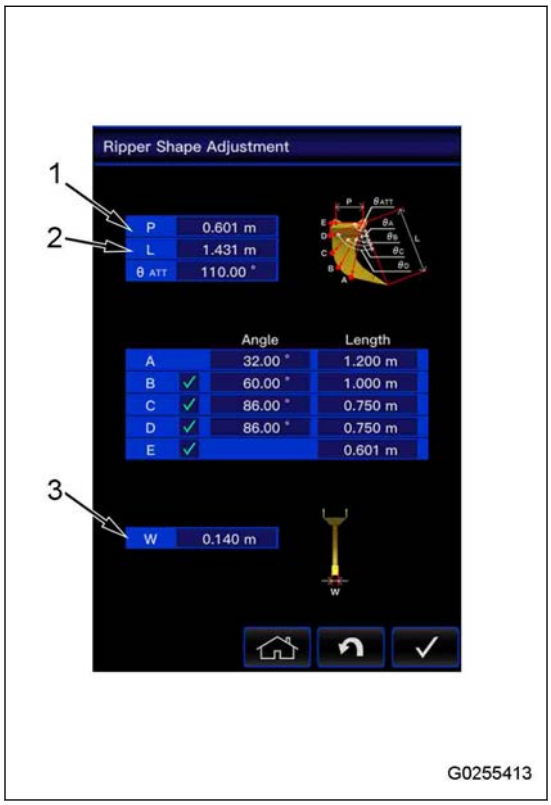

Input (1) P, (2) L, (3) W

Measure the dimensions that follow with a measuring instrument such as a steel scale.

(1) P: Distance between bucket pin center (4) and bucket link pin center (5)

(2) L: Distance between bucket pin center (4) and bucket edge

(3) W: Ripper width

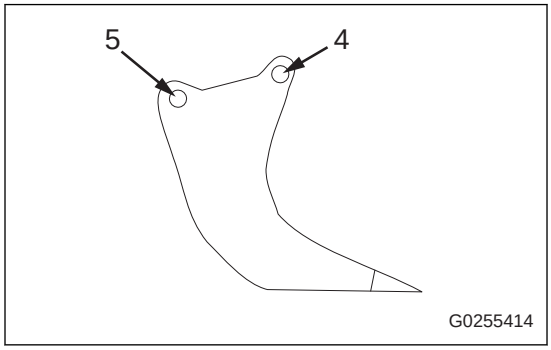

How to Measure Foot Angle and Contour Point

1. Put the marks with the marker at the 5 points of the contour points (A) to (E).
   - The contour point (A) is the intersection point of the straight part of the ripper and corner.
     If you cannot judge the straight part of the bucket bottom and corner easily, use the point to be touched on the ground during the digging operation.
   - The contour point (E) is the outermost part on the straight line extension of the bucket pin and bucket link pin.
   - Set the contour points (B), (C), and (D) to the positions where the recognition points (A) and (E) are put equally.
2. Set the magnet pole tool (5) to the bucket pin.

   Set the center of the bucket pin to be aligned with the center of the magnet pole.
3. Install the plumb bob (6) to the magnet pole tool (5), and set the bucket edge and bucket pin vertically.
4. Measure the points to be measured at (A) to (E) and distance between the centers of the magnet pole, and then input them in length (2).
5. Put the steel scale (3) to the magnet pole tools (5) and points to be measured at (A) to (E).
6. Set the digital angle gauge (7) on the steel scale (3), measure the angle (1) at (A) to (E).

   The angle (1) at (A) to (E) is the angle of each point of (A) to (E) from the horizontal line.

   Input the angle (E) (= foot angle) in θ_{ATT}.

   When the steel scale (3) is below the horizontal line of the bucket pin

   Subtract the angle (8) from 90 °, and input the value as the angle (4) of the contour point.

   When the steel scale (3) is above the horizontal line of the bucket pin

   Add the angle (8) to 90 °, and input the value as the angle (4) of the contour point.

   REMARK

   If the work equipment is in the air, it lowers by hydraulic drift of the work equipment.
   When you measure the contour point, make sure that the plumb bob (6) is set vertically from time to time.

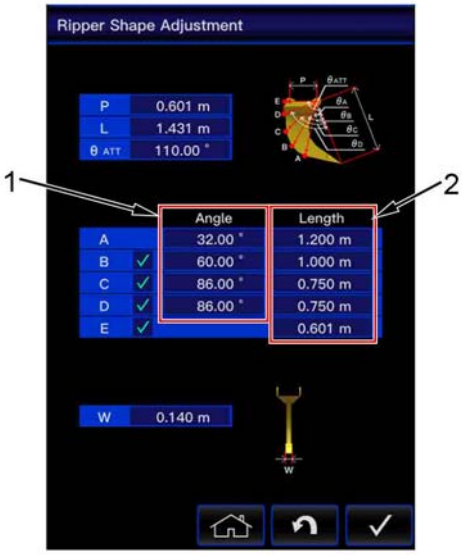

G0253394

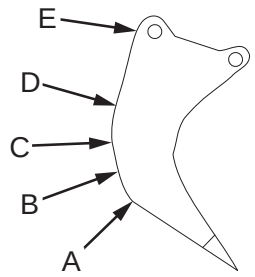

G0214411

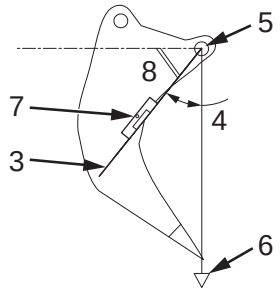

G0255415

Complete Shape Adjustment

After you complete the input of each parameter, tap the checkmark button to complete the editing.

Handle Air Conditioner

NOTICE

- **Be sure to start the engine at low speed when you do the running-in operation of the air conditioner. Do not start the air conditioner at high speed while the engine runs. It can cause a failure on the air conditioner.**
- **If water goes into the sunlight sensor and filter, it can cause failure. Do not let water get on them. Do not let open flame be near them.**
- **Keep the sunlight sensor clean at all times to operate the automatic function of the air conditioner sufficiently. Do not put objects that can prevent its function around the sensor.**

When the air conditioner is not in regular use, run the air conditioner with the engine at low speed from time to time and operate cooling or dry heating for several minutes, to prevent oil deficit in each part of the equipment.

When the temperature in the cab is low, the air conditioner does not operate in some cases. In this case, supply the recirculation air to make the inner side of the cab warm. After that, turn on the air conditioner switch to operate the air conditioner.

If a problem is sensed in the equipment or sensor in the air conditioner, the air conditioner system caution lamp on the machine monitor screen comes on. If the air conditioner system caution lamp comes on, consult your Komatsu distributor for inspection and maintenance.

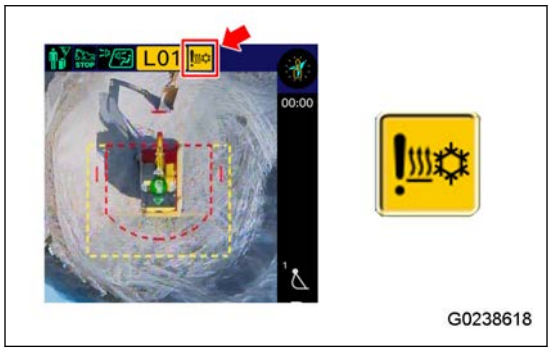

Refresh Air During Cooling

- When you operate the air conditioner for a long time, set it to ventilation operation approximately one time every hour.
- If you smoke while the air conditioner is on, the smoke can get in your eyes. In such case, open the window and change the vent to FRESH for a while for ventilation to move smoke out.

Be Careful not to Cool Too Much

The cooling temperature optimum for health is when you feel moderately cool (5 to 6 ℃ {41 to 42.8 ℉} lower than the ambient temperature) at the time you go in the cab.

Be careful to select the correct temperature.

Explanation of Air Conditioner Components

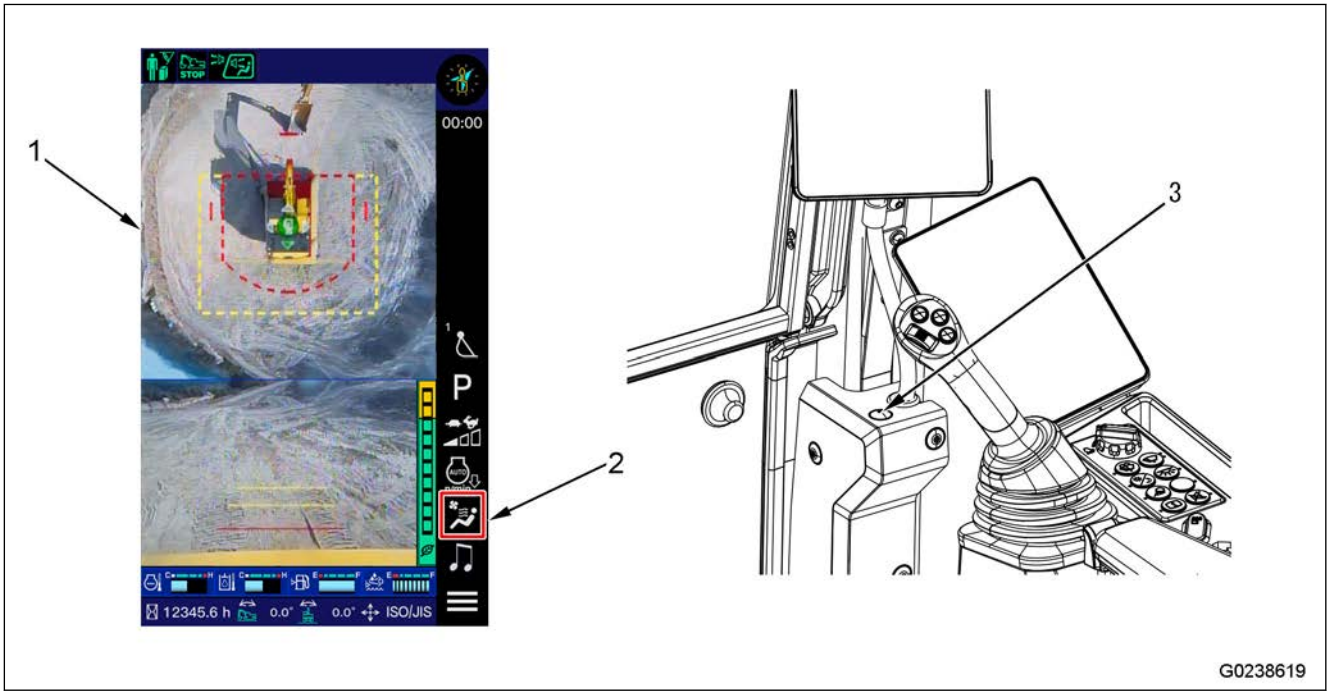

(1) Machine monitor

(2) Air conditioner icon

(3) Sunlight sensor

Air Conditioner Menu

Tap “Air conditioner Icon”. The air conditioner menu is shown.

REMARK

The color of the air conditioner icon shows the operation state of the air conditioner.

Air conditioner icon shown in green: Air conditioner is ON

Air conditioner icon shown in white: Air conditioner is OFF

Display of Air Conditioner Menu

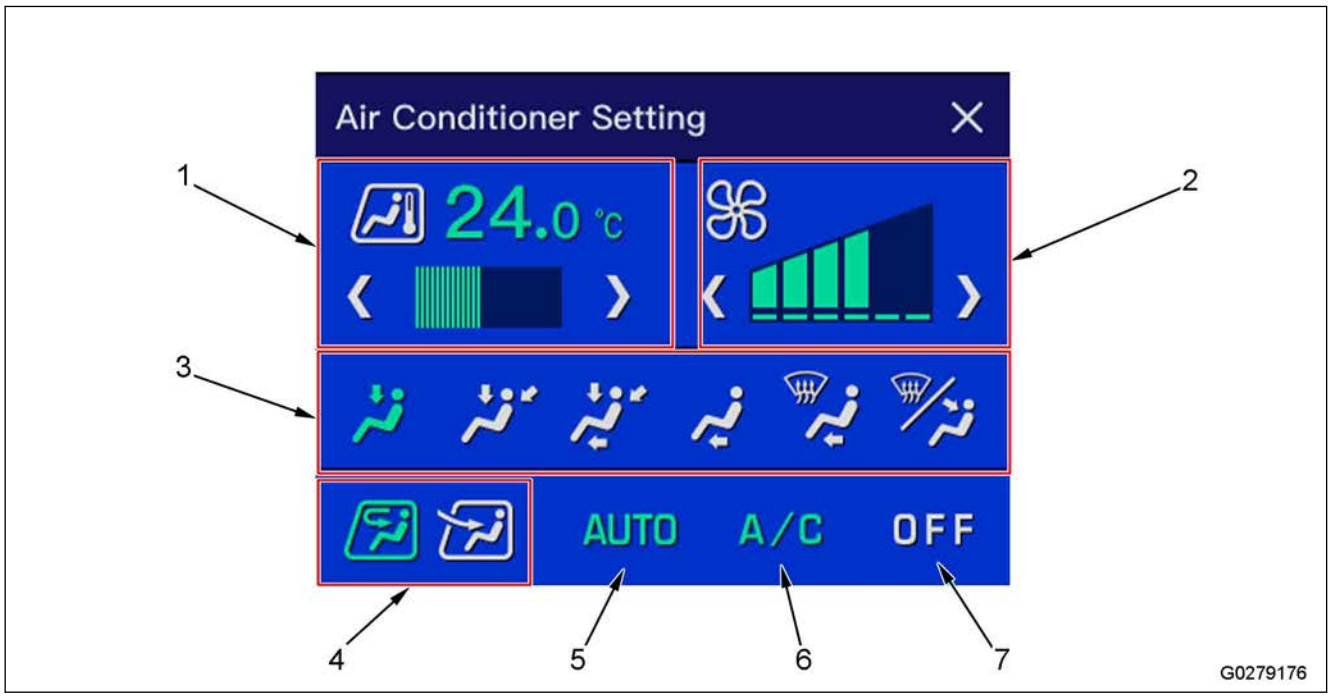

(1) Temperature setting display
(2) Airflow setting display
(3) Vent setting display
(4) FRESH/RECIRC air setting display
(5) Auto button
(6) Air conditioner button
(7) OFF button

Temperature Control Display

You can move the slider of the temperature setting display to adjust the temperature in the cab. You can set the temperature between 18 and 32 ℃ {64.4 and 89.6 °F}. Move the slider to the right to increase the temperature. Move the slider to the left to decrease the temperature.

- The temperature is usually set at 25 ℃ {77 ℉}.
- The temperature can be set in the steps of 0.5 ℃ {0.9 ℉}.

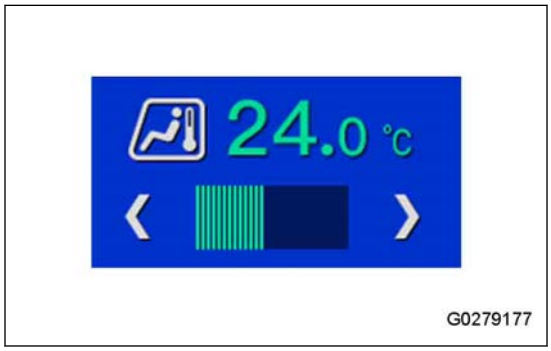

Monitor display and function

When the temperature is set to the minimum (18.0 ℃ {64.4 ℉}), the air flow is fixed to the maximum cooling temperature.

When the temperature is set to 18.5 to 31.5 ℃ {65.3 to 88.7 ℉}, the indoor temperature is adjusted to the set temperature.

When the temperature is set to the maximum (32.0 ℃ {89.6 ℉}), the air flow is fixed to the maximum heating temperature.

REMARK

If the temperature is set to 18.0 ℃ {64.4 °F} or 32.0 ℃ {89.6°F} under auto mode, the air flow of the fan is set to “HIGH” at all times, and it does not change even when the indoor temperature reaches the set temperature.

Airflow Control Display

Airflow setting display is used to adjust the air flow rate.

You can adjust the air flow rate to 6 levels.

- Move the slider to the right to increase the air flow rate. Move it to the left to decrease the air flow rate.
- During automatic operation, the air flow rate is automatically adjusted.

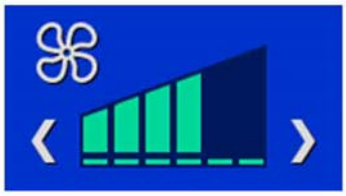

G0279178

Monitor Display and Air Flow Rate

Monitor display	Air flow rate
G0279179	Air flow “Low”
G0279180	Air flow “Medium 1”
G0279181	Air flow “Medium 2”
G0279182	Air flow “Medium 3”
G0279183	Air flow “Medium 4”
G0279184	Air flow “High”

Vent Setting Display

The vent setting display is used to select the vents.

Tap an air changeover button to select the vents to blow air. The currently selected setting is shown in green.

G0209892

(A): Front window glass vent (2 places)

(B): Face vents (4 places)

(C): Rear vents (3 places)

(D): Foot vent (1 place)

REMARK

During automatic operation, the vents are automatically selected.

Air blows out from the vents with a mark of ○.

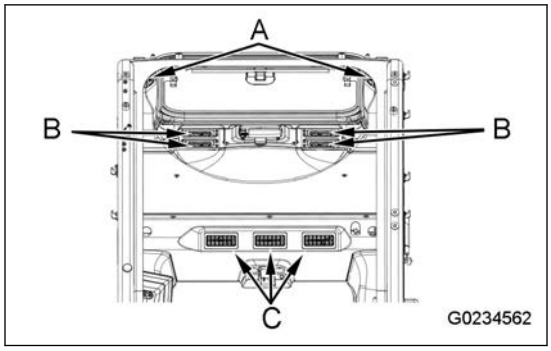

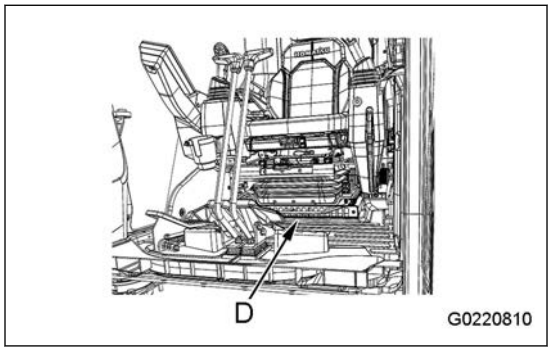

Liquid crystal display (LCD)	Air vent mode	Vent				Remarks
		(A)	(B)	(C)	(D)	
G0220811	Front vent		○			Not selected during automatic operation
G0210309	Front, rear vents		○	○		-
G0210310	Front, rear, foot vents		○	○	○	-
G0220812	Foot vent				○	-
G0220813	Foot vent Defroster vent	○			○	Not selected during automatic operation
G0210311	Front Defroster vent	○				Not selected during automatic operation

Fresh/Recirc Air Changeover Setting Display

The fresh/recirc air changeover setting display is used to change the air source between recirculation of the air in the cab and intake of fresh air. The currently selected setting is shown in green.

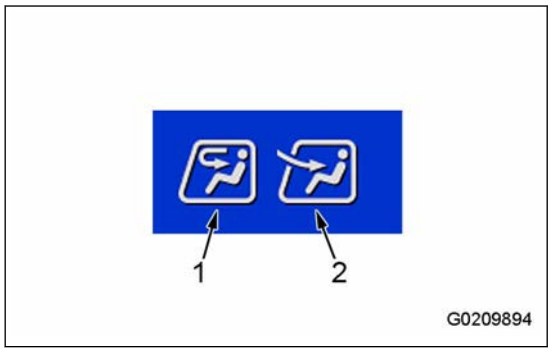

RECIRC (1)

Fresh air is blocked. Air in the cab is recirculated.

Use RECIRC when you cool down the cab quickly or when fresh air is contaminated.

FRESH (2)

Outside air will come into the cab.

Use it when you take fresh air into the cab or remove fog from the glass.

REMARK

The air source changes automatically between fresh air and recirculated air during automatic operation.

Auto Button

The auto button is used to select the air flow rate, vents, recirculated air and fresh air automatically in response to the set temperature.

When the auto function is ON, the auto button is shown in green.

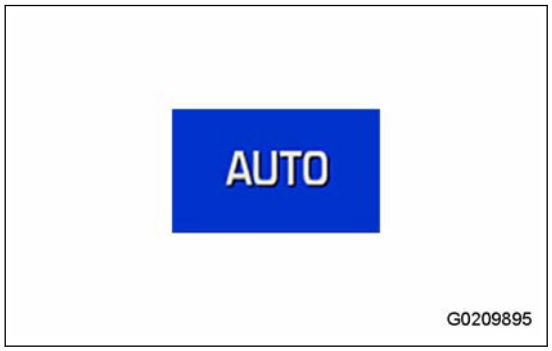

- Tap this button, and use the temperature control switch to set the temperature. The air conditioner operates in automatic mode.
- When you change the operation mode from automatic to manual, operate each switch to select the air flow rate, vents, and air source (FRESH/RECIRC).

REMARK

If the temperature is set to 18.0 ℃{64.4 °F} or 32.0 ℃{89.6 °F} when in automatic operation, the air flow from the fan is set to “HIGH” at all times, but this is not a problem.

Air Conditioner Button

You can start or stop the air conditioner (cooling, dry heating) with the air conditioner button.

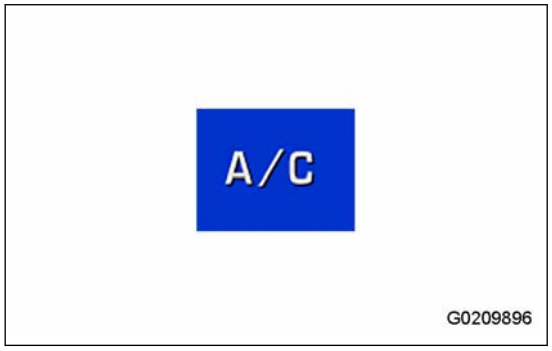

- Push the air conditioner button while the fan is in operation (when the airflow setting display is shown). The air conditioner is turned on, and starts to work. Tap it again to turn off the air conditioner.
- The air conditioner cannot be operated while the fan stops.
- When the air conditioner function is ON, the air conditioner button is shown in green.

OFF Button

The OFF button is used to stop the fan and air conditioner.

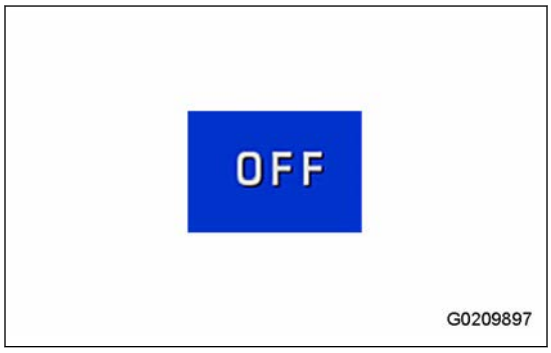

Sunlight Sensor

The sunlight sensor automatically adjusts the air flow rate from the vents in response to the strength of the sun's rays. In addition, it automatically senses the changes in the temperature in the cab caused by changes of the strength of the sun's rays, and automatically adjusts the temperature.

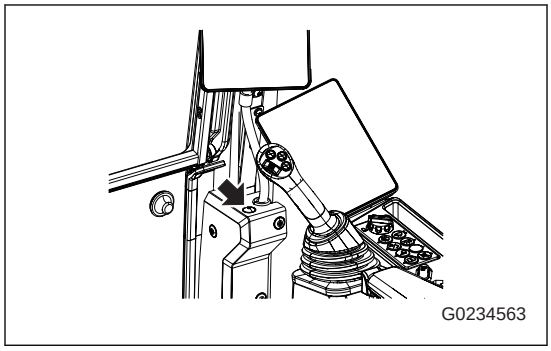

How to Operate Air Conditioner

The air conditioner can operate automatically and manually. Select the method of operation as you like.

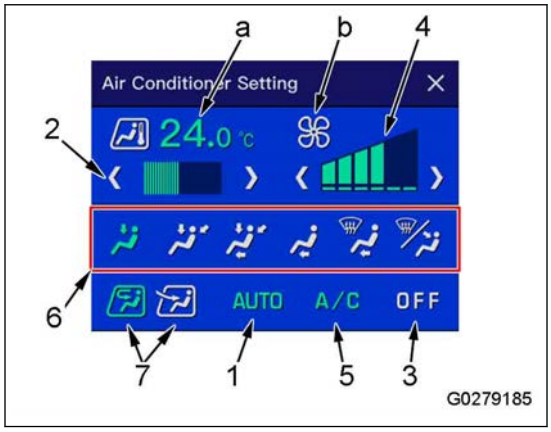

How to Use Automatic Operation

1. Set the auto button (1) to ON.
   The set temperature (a) and air flow rate (b) are shown.
2. Adjust the temperature as desired with the slider (2) of the temperature setting display.
   The air flow rate, vents, and air source (FRESH/RECIRC) are automatically selected in response to the set temperature, and the air conditioner operates automatically in the set temperature.

REMARK

When the vent display monitor (6) shows (c) or (d), and engine coolant temperature is low, the air flow rate is automatically controlled to prevent blow out cold air.

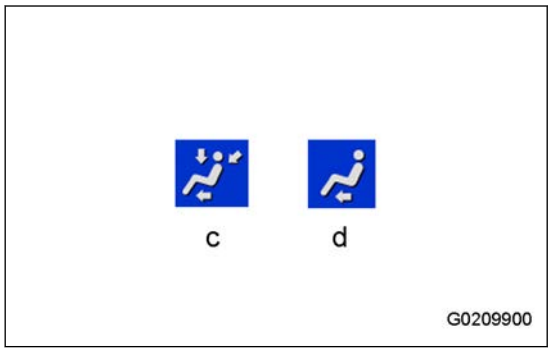

How to Stop Automatic Operation

Tap the OFF button (3). The air conditioner stops.

How to Use Manual Operation

1. Adjust the slider (4) on the airflow setting display to adjust the air flow rate.
   At this time, make sure that the set temperature (a) and air flow rate (b) are shown on the display monitor.
2. Tap the air conditioner button (5) to ON.
3. Adjust the temperature as desired with the slider (2) of the temperature setting display.
4. Push the vent setting display (6) to select the desired vent.
5. Select recirculation or fresh air from the FRESH/RECIRC air setting display (7) and tap it.

How to Stop Manual Operation

Tap the OFF button (3). The air conditioner stops.

How to Operate the Cold Air to Head and Warm Air to Feet Function

To blow cold air to the face and warm air to the feet, operate the air conditioner as follows.

1. Adjust the slider (4) on the airflow setting display to adjust the air flow rate. At this time, make sure that the set temperature (a) and air flow rate (b) are shown on the display monitor.
2. Tap (c) in the vent setting display (6).
3. Tap the air conditioner button (5) to ON.
4. Adjust the airflow setting display (4), temperature setting display (2) and FRESH/RECIRC air selector display (7) to the desired positions.

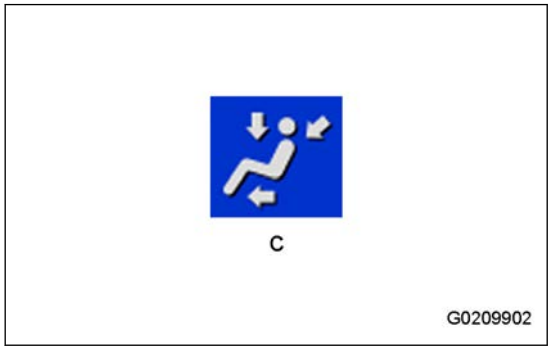

How to Use Defroster

1. Adjust the slider (4) on the airflow setting display to adjust the air flow rate. At this time, make sure that the set temperature (a) and air flow rate (b) are shown on the display monitor.
2. Tap (e) or (f) shown in the drawing of the vent setting display (6).
3. Select fresh air from the FRESH/RECIRC air setting display (7) and tap it.
4. Adjust the temperature control slider (2) of the temperature setting display, and set the temperature display on the display monitor to the maximum heating 32.0 ℃ {89.6 ℉}.

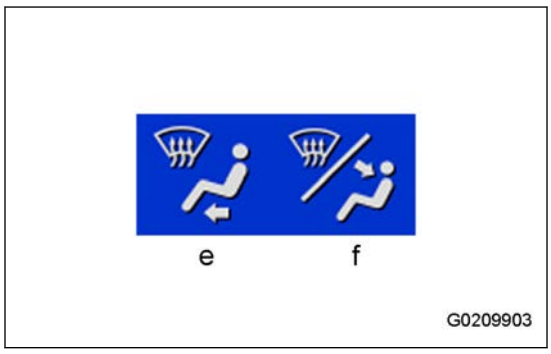

5. Adjust the vents (A) and (B), to let the air blow on the window glass.

   REMARK

   The vents (C), (D) are fixed type.
6. When you want to remove the fog from the windshield or to dehumidify in the rainy season, tap the air conditioner button (5) to ON.

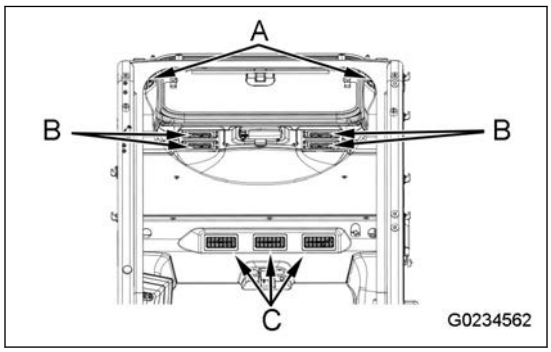

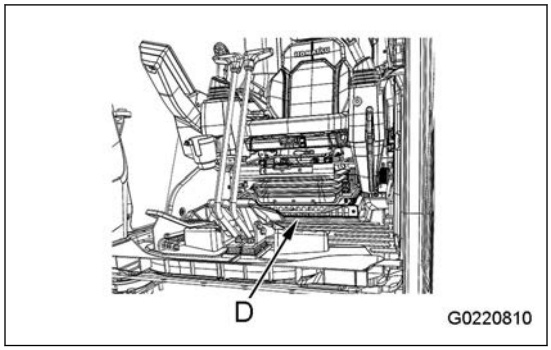

Handle Radio Sound System

NOTICE

- **To keep the safety, adjust the sound volume to a level where you can hear the external sounds.**
- **If water goes into the speakers or radio, it can cause a failure. Be careful not to splash water on them.**
- **While the buzzer operates, some radio functions cannot be operated. Do the necessary remedies in response to the message shown on the monitor.**

Tap the audio icon to show the audio menu.

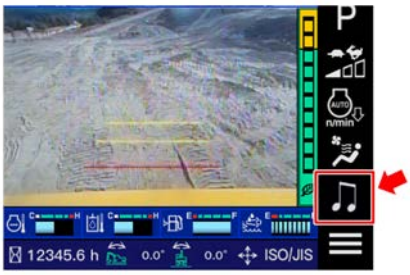

G0209905

There are 3 types of audio icons.

(A): Audio is not in operation.

(B): Audio is in operation.

(C): Incoming call, outgoing call, or talking.

G0209906

The icons are shown in the audio menu.

Tap the icon of the item to be used.

The icon of the currently selected source comes on in green with a highlight.

(1) AM/FM radio icon

(2) Bluetooth® audio icon

(3) OFF icon

Turns off the audio.

(4) Phone icon

(5) Setting icon

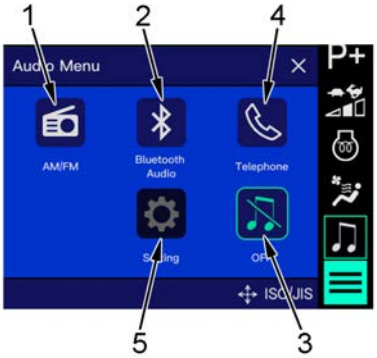

G0228937

How to Listen AM/FM Radio

Tap the AM/FM radio icon (1) in the audio menu.

If it is not easy to hear the radio, tune to a different station with AUTO SEEK.

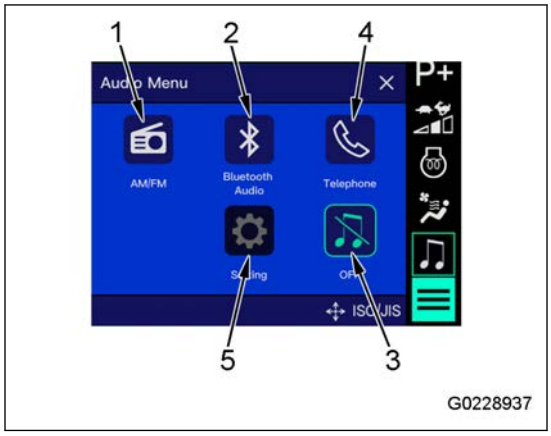

How to Adjust Frequency

1. Tap the radio source selector (6) for the AM or FM band.
   The selected option is shown with green highlight.
2. Adjust the frequency.

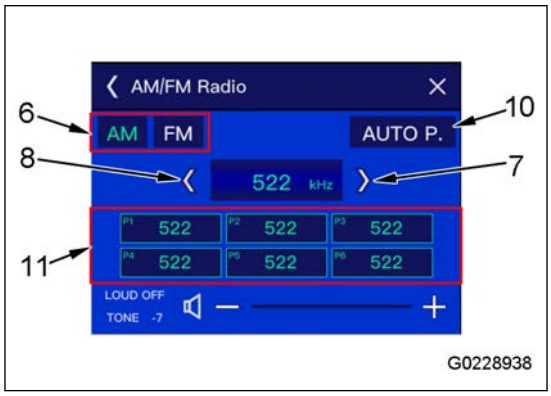

- Tap the UP (7) to increase the frequency.
- When you push and hold the UP button (7), AUTO SEEK (9) is shown and the frequency in good receiving condition is automatically sensed, and the frequency display stops there.
- Tap the DOWN (8) to decrease the frequency.
- When you push and hold the DOWN button (8), AUTO SEEK (9) is shown and the frequency in good receiving condition is automatically sensed, and the frequency display stops there.

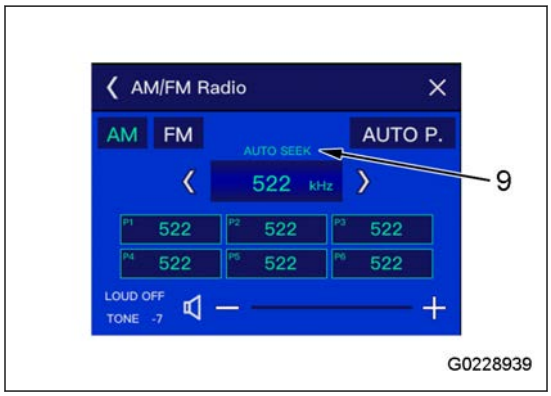

Auto Preset Setting

1. Tap AUTO P. (10).
2. When you tap the checkmark button, a frequency in good reception is sensed, and it is automatically registered to preset memory (11).

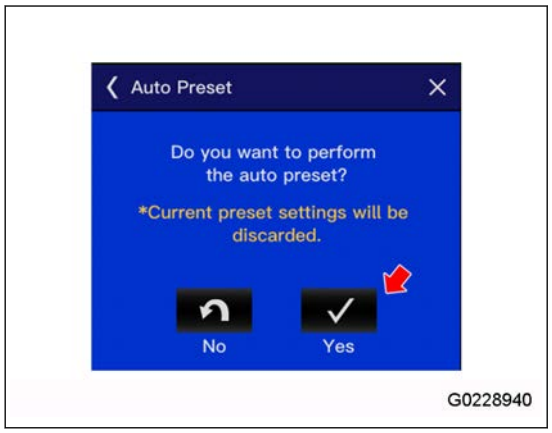

How to Load Preset

Tap the desired preset memory button (11).

How to Preset Station

Push and hold the desired preset memory button (11).

The currently received frequency is registered to the selected preset number.

How to Play Music with Bluetooth® Connected

Tap Bluetooth Audio icon (2) on the audio menu.

For how to connect Bluetooth®, see “Bluetooth® Connection Setting (3-341)”.

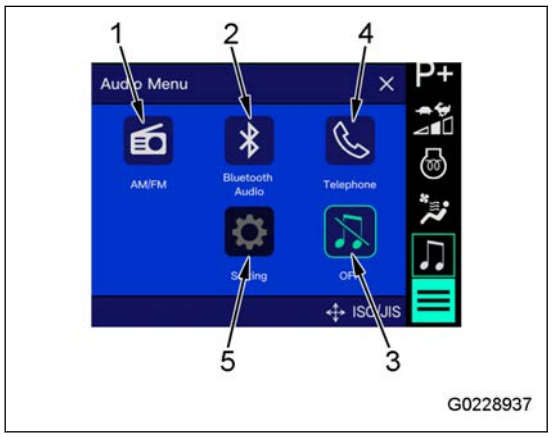

When you do the Bluetooth® connection, operate it as follows.

- Tap the play/pause button (12) to start or stop the play of the track. The current track is played back or paused.
- Push the track movement (13) to move the track. The track moves.
  When you push and hold, it continuously moves on to the next track.
- When you do the operations that follow, operate from the connected playback device.
  - Move folder
  - Change playback mode (Repeat or Random)

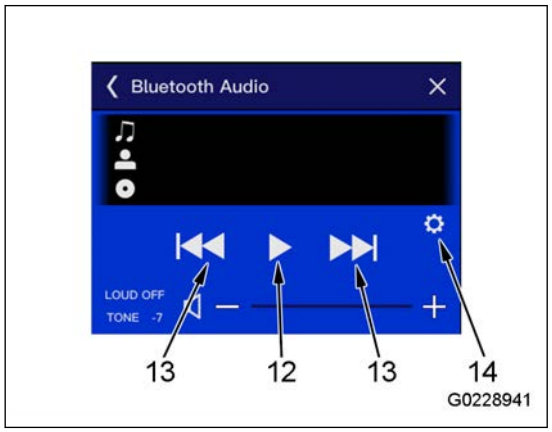

Tap the setting icon (14), and the display changes to the Bluetooth® connection setting screen. For the setting, see “Audio Setting (3-339)”.

To cancel Bluetooth® connection, cancel the connection on the connected device side. For the operation, obey the instruction manual of the device to connect.

How to Use Telephone

How to Make a Phone Call

Tap the phone icon (4) in the audio menu.

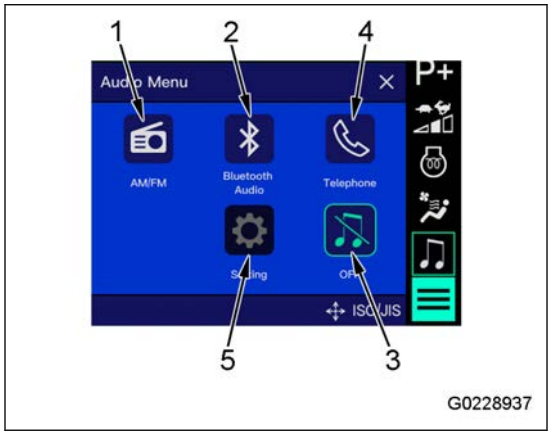

Tap Bluetooth® connection setting (18), and the display changes to the Bluetooth® connection setting screen. For the setting, see “Audio Setting (3-339)”.

When you make a phone call, the connected device changes to hands-free.

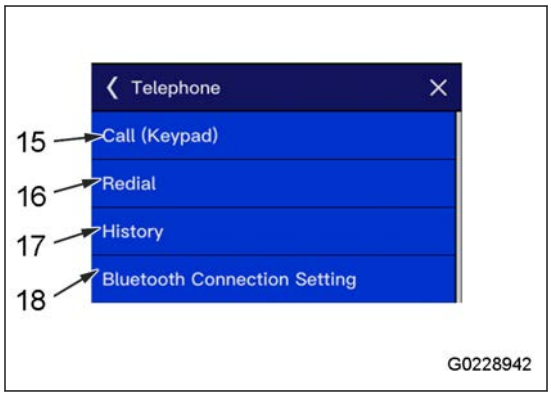

How to Make a Phone Call by Input of Phone Number

1. Tap Phone Call (15).
2. Enter the phone number. Tap the call icon to make a phone call.

How to Make a Phone Call by Redial

You can make a phone call again to the last call number you made.

1. Tap Redial (16).
2. Tap the call icon to make a phone call.

REMARK

If there is no number you can redial, Redial (16) cannot be operated.
If the number to be redialed contains +, #, or *, these symbols are not shown.
You cannot call numbers that contain +, #, or * from the Redial screen.

How to Make a Phone Call from Phone History

Select a phone number from the history of previous outgoing and incoming phone calls to call it.

Missed calls will be shown with an amber highlight.

1. Tap Phone History (17).
2. Tap the phone number shown to make a phone call.

REMARK

When there is no number shown in the history or the history information is under loading, Phone History (17) cannot be operated.
If the number to be shown in the history contains +, #, or *, these symbols are not shown.
You cannot call numbers that contain +, #, or * from the History screen.

How to Receive a Phone Call

If there is an incoming call while Bluetooth® is connected, the display changes to the incoming call screen.

For how to connect Bluetooth®, see “Bluetooth® Connection Setting (3-341)”.

If there is an incoming call, the connected device changes to hands-free.

Tap the call icon (19) to receive the call.

Tap the end icon (20) to hang up.

REMARK

If you receive a phone call on the connected device side, use the speaker and microphone on the connected device side.

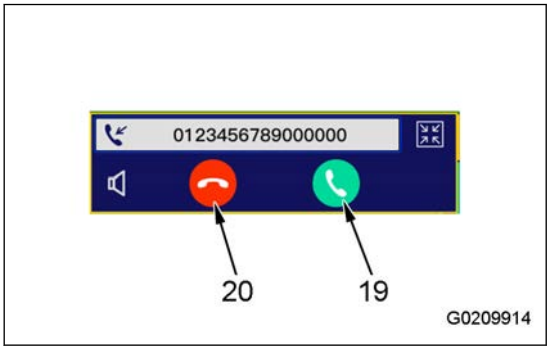

How to Operate During a Call

The connected device changes to hands-free during a call.

Tap the minimize icon (21) to shrink the call screen. The standard screen is shown. Tap the call state icon (22) to cancel the minimization.

Tap the microphone mute icon (23) to cut the microphone audio input to the other party. Tap the microphone mute icon (23) again to cancel the mute state.

Tap the end icon (20) to hang up.

REMARK

- If the hands-free receiving call volume is large, the microphone gets the other party's voice from the speaker, and echoes can occur.
  In that case, decrease the receiving call volume.
- The call microphone has a function to recognize the ambient sound that occurs during the call is a noise, and to remove it.
  If you start a call while there is a lot of ambient noise (such as engine sound or machine sound), the noise will not be removed and the other party possibly cannot hear you.
  In such a case, make a call again from a quiet state.

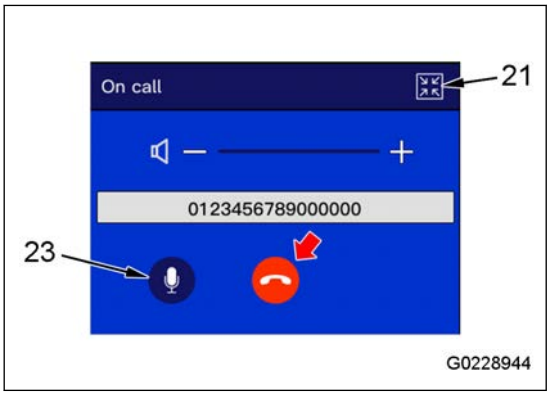

Audio Setting

When you tap the setting icon (5) or setting button (14) or (18), the display changes to the setting screen. If the audio menu OFF icon (3) is selected, the display does not change to the setting screen.

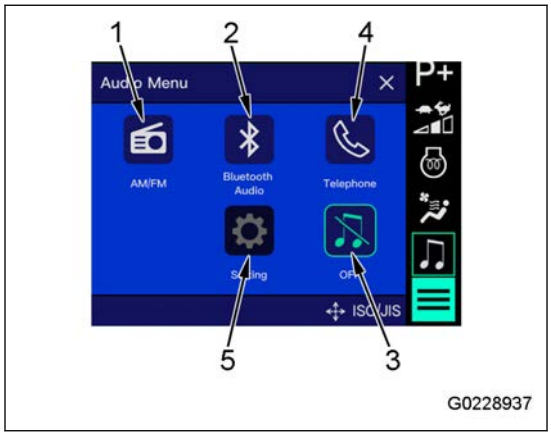

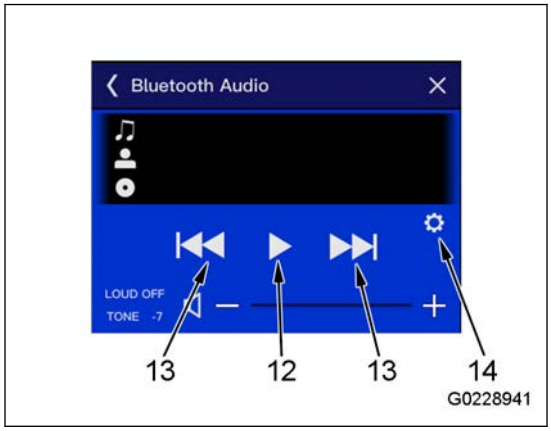

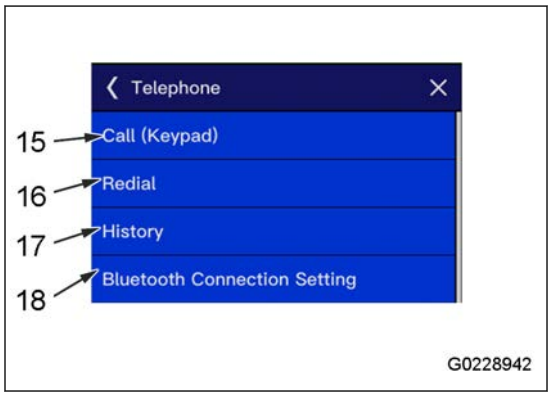

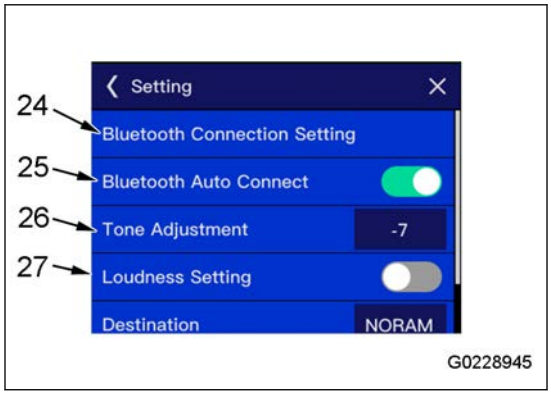

(24) Bluetooth Connection Setting

The screen changes to the Bluetooth connection setting screen. For details, see “Bluetooth® Connection Setting (3-341)”.

(25) Bluetooth Auto Connect

You can turn ON/OFF Bluetooth® auto connection.

(26) Tone Adjustment

The screen changes to the tone adjustment screen. For details, see “Volume Control (3-340)”.

(27) Loudness Setting

You can turn ON/OFF the loudness setting. For details, see “Volume Control (3-340)”.

Volume Control

For the radio sound system, you can adjust the volume, loudness, and tone in the same method.

How to Adjust Volume

Tap the volume UP (28) or volume DOWN (29) button to adjust the volume. Tap and hold the button to change the level continuously.

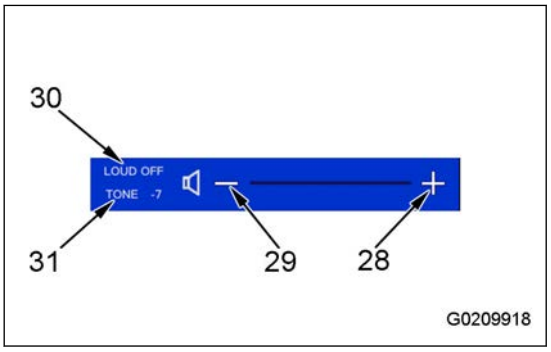

Loudness Setting

Tap the LOUD OFF button (30) to turn ON/OFF loudness.

Turn on the loudness, and you can strengthen the bass and treble ranges if they are weak when the sound volume is low.

Tone Adjustment

Tap the TONE button (31), and the display will change to the tone adjustment screen.

Tap the tone UP (32) or tone DOWN (33) button to adjust the tone.

Tap and hold the tone UP (32) or tone DOWN (33) button to raise or lower the tone continuously.

You can adjust the sound quality which is output from the speaker.

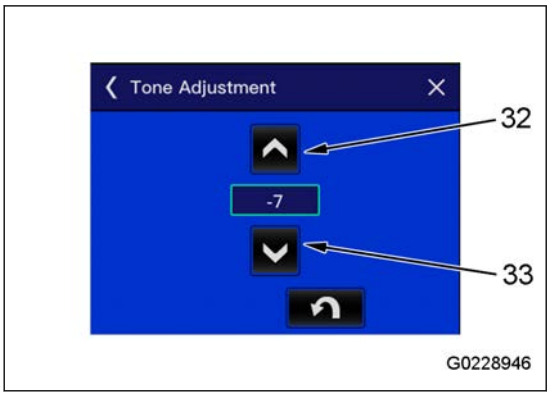

Bluetooth® Connection Setting

1. Tap Bluetooth Connection Setting (24) on the audio setting screen. The list of pairing-completed devices is shown.
2. Tap the device to be connected, and it is connected through Bluetooth®.

   If you want to make pairing with a new device, tap the new registration button (34).

   For details on pairing, see “Pairing (3-342)”.

   If you want to delete the registration of devices, tap the registration deletion button (35).

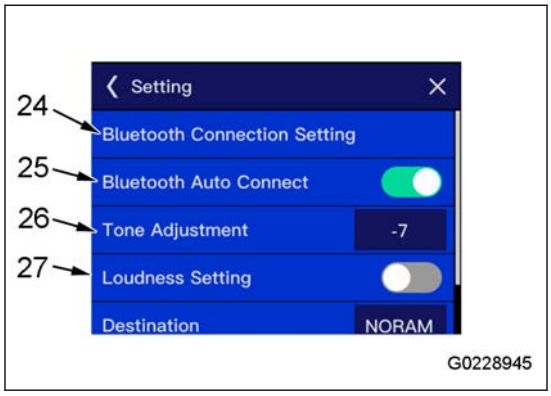

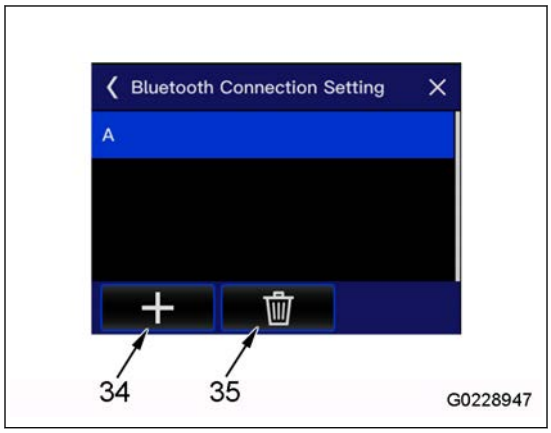

Select the device to delete from the list of pairing-completed devices. Tap the checkmark button, and the selected device is deleted from the list.

REMARK

Registration or deletion cannot be done by the condition of the Bluetooth® device in some cases. In this case, register or delete the items in the 2 ways that follow.

- Turn the starting switch back to the OFF position, wait until the machine monitor goes off. Turn the starting switch to the ACC or ON position again, and register or delete it again.
- Check the Bluetooth® setting menu of the device you wish to connect. If the machine’s device name is already registered with the device, delete the device registration, then re-register or delete it as needed.

Pairing

It is an authentication of the Bluetooth® device which is used on this machine.

The maximum registration of the pairing is 8. For the 9th and after, delete old device pairing registrations and then register new pairings.

1. Tap the new registration button (34) on the Bluetooth Connection Setting screen.

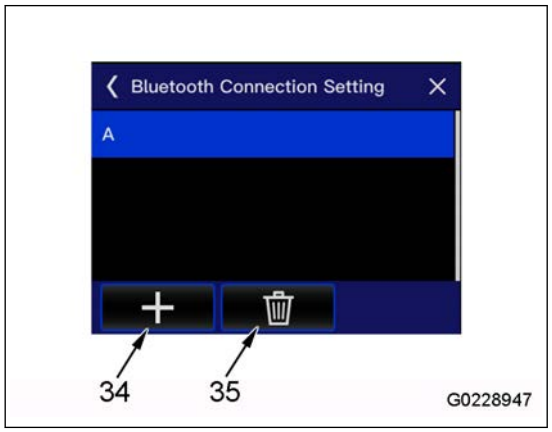

2. Do the pairing on the side of the device to connect, in this state.

   For the operation, obey the instruction manual of the device to connect.

   - When the pairing is done successfully, “Registration completed.” is shown.
   - If there is no response for 180 seconds, “Connection timed out. Do you want to retry?” is shown. When this occurs, do the procedure from the start again.

How to Examine Version of Radio

When you tap the setting icon (5) or setting button (14) or (18), the display changes to the setting screen.

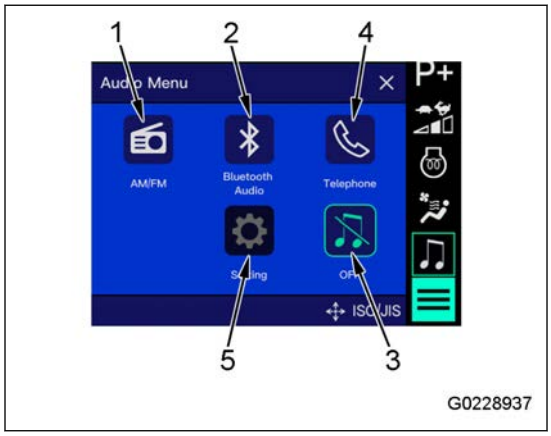

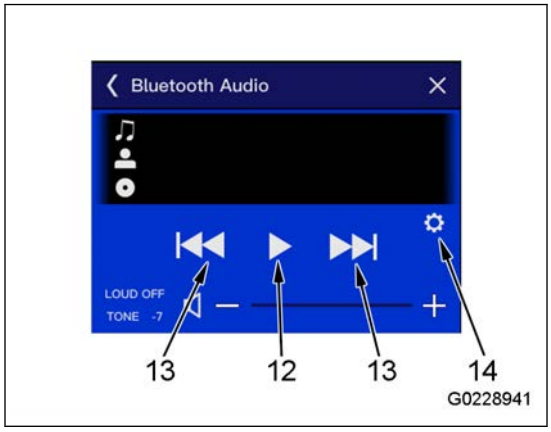

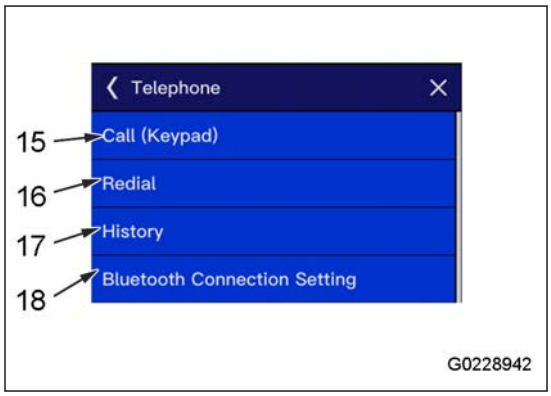

You can see the version of radio.

Stow Antenna

Before you transport the machine or put it in a garage, stow the antenna (1) to prevent obstruction.

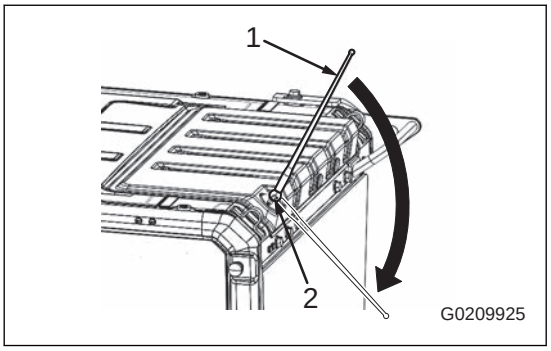

1. Loosen the mounting bolt (2) of the antenna (1). Stow the antenna (1) down.
2. After you stow the antenna (1), tighten the bolt (2) to fix it.

Handle KomVision

⚠ WARNING

- **The KomVision is a device to show the area around the machine on the machine monitor by the cameras installed in the machine, but the area which can be reflected is limited. Visually examine the area around the machine to secure the safety. Do not examine safety only by the camera image shown on the machine monitor.**
- **The work equipment is shown at the top of the machine monitor screen at all times, regardless of the direction of the sprockets. Be careful of the direction of the machine.**

⚠ CAUTION

- **Because of the properties of the camera lens, other machines and crawler tracks shown in the image when the machine moves can look like they move or are of different sizes.**
- **The brightness or color of the objects shown on the screen changes in some cases because of the automatic adjustment function of the camera.**
  Especially in dark areas, the color of the objects can look different significantly.

Precautions When You Use KomVision

- If the normal range cannot be confirmed in the confirmation of the camera visibility, it is necessary to adjust the monitor screen. Ask your Komatsu distributor to perform this work.
- The machine monitor image may not be displayed due to darkness at night or in a tunnel, fog, snow, rain, cloud of dust, etc.
- Obstacles above the camera of the machine are not displayed. Be careful enough of the work equipment of a large machine, tree branches, etc. in high positions.
- Reference line is displayed with reference to the flat ground, so the distance of the guide line is not correct on slopes and uneven ground.

Machine Monitor Display

The names of the displays on the machine monitor are as follows.

(1) Image of bird eye's view

(2) Camera icon

(3) Single camera direction display

(4) Reference line

(5) Swing reference line

(6) Single camera image

(7) Single camera reference line

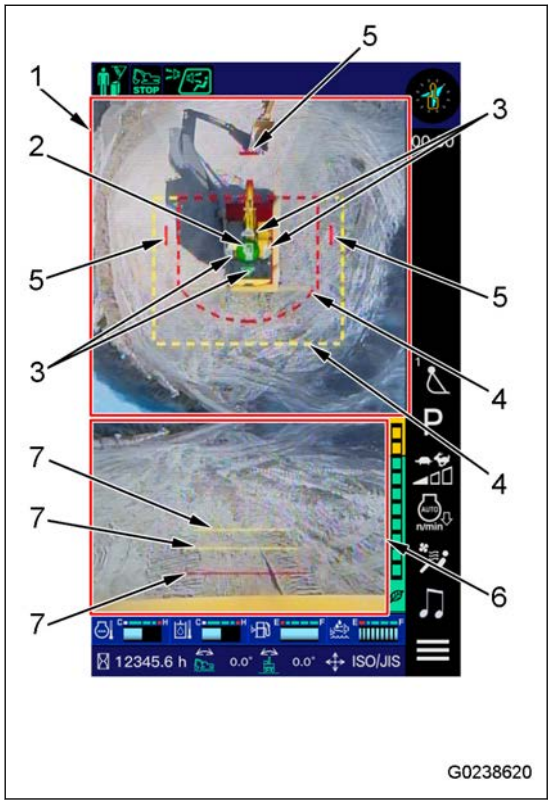

The KomVision composes 4 camera images. The visibility that can be shown with the image from above is approximately 360 °.

Because this image is electronically composed, the objects in the image can be shown double, or distortions or misalignments can occur in the hatched areas at the rear side (A) (B) and the front (C) (D) of the machine.

For the single camera image, the images shot by each of the installed cameras is shown.

The machine monitor automatically changes to the main screen when you do the work equipment, swing, travel, or attachment operation.

If the camera icon does not flash, the camera image is not updated. Consult your Komatsu distributor for repair.

The reference line is shown as follows.

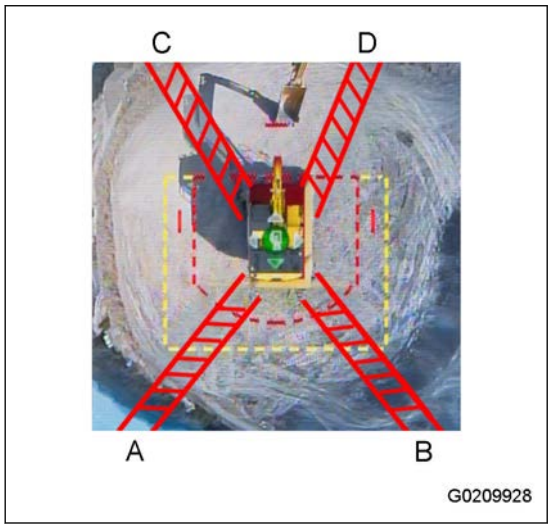

Shape of reference line	
(a)	Approximately 2.5m {8 ft 2 in} from the end of the machine
(b)	Approximately 4.5 m {14 ft 9 in} from the end of the machine
(c)	Approximately 2 m {6 ft 7 in} from the end of the machine
(d)	Approximately 4 m {13 ft 1 in} from the end of the machine
(e)	Approximately 1m {3 ft 3 in} from the end of the machine

Color of reference line	
(D)	Red
(E)	Yellow

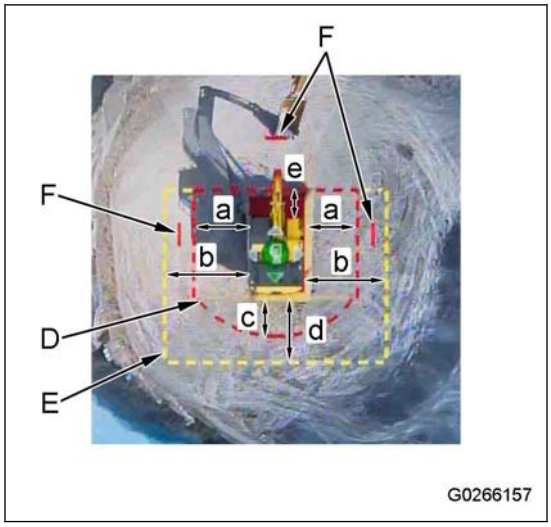

Swing Reference Line

With the swing reference lines (F), you can see the approximate points where the reference line (D) goes by as the upper structure turns.

Single Camera Image

The single camera image (6) comes from a selected camera out of 4 cameras at the front, rear, right, and left. Tap the area in the desired direction out of A to D. The single camera image changes to that direction.

Green triangle mark in the single camera direction (3) shows which camera shows the image.

REMARK

You can change the direction of the single camera image shown at startup.
For the adjustment, see “Camera Position at Startup (3-102)”.

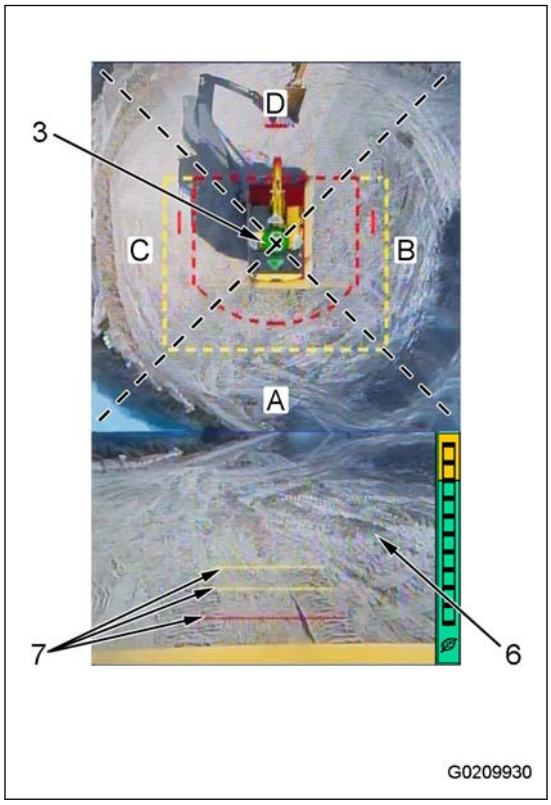

Reference Line of Single Camera

By the single camera reference line (7), you can see the approximate distance from the machine.

REMARK

When the front camera image is shown, the single camera reference lines are not shown.

Use Each Function

⚠ CAUTION

Be careful that some functions cannot be used at the same time.
If such functions are used at the same time, this can cause unintended operation. The operator must be careful of the condition of the machine at all times.

The operation when functions are used together at the same time can be as follows.

(1) Only the function that was set to ON first can be used.

(2) The operation is different by the monitor used for the payload meter function.

While the payload meter function is used on the ICT monitor, the payload meter function cannot be used on the machine monitor.

If the payload meter function is activated on the ICT monitor while the payload meter function is used on the machine monitor, the priority is given to the payload meter function of the ICT monitor.

(3) Cannot be used at the same time.

(4) Can be used at the same time, but the function activates based on the priority in the sequence that follows.

Priority 1: Object avoidance

Priority 2: Cab interference prevention, 2D boundary control (swing angle limitation)

Priority 3: 3D boundary control, 2D boundary control (upper, lower, right, and left walls)

Priority 4: 2D machine control, 3D machine control, auto swing

Priority 5: Swing to angle

REMARK

There can be functions that cannot be selected because of the installation conditions of optional equipment.

	2D machine control	3D machine control	Swing to angle	2D boundary control	Cab interference prevention	3D boundary control	Object avoidance	Payload meter (machine monitor)	Payload meter (ICT monitor)	Auto swing
2D machine control	-	(1)		(4)	(4)	(1)	(4)			(1)
3D machine control	-	-		(1)		(4)	(4)	(2)	(3)	(3)
Swing to angle	-	-	-	(4)	(4)	(4)	(4)			(4)
2D boundary control	-	-	-	-		(1)	(4)			(1)
Cab interference prevention	-	-	-	-	-		(4)			(4)
3D boundary control	-	-	-	-	-	-	(4)	(2)		(3)

	2D machine control	3D machine control	Swing to angle	2D boundary control	Cab interference prevention	3D boundary control	Object avoidance	Payload meter (machine monitor)	Payload meter (ICT monitor)	Auto swing
Object avoidance	-	-	-	-	-	-	-			(4)
Payload meter (machine monitor)	-	-	-	-	-	-	-	-	(2)	(2)
Payload meter (ICT monitor)	-	-	-	-	-	-	-	-	-	(3)
Auto swing	-	-	-	-	-	-	-	-	-	-

Object Avoidance

⚠ WARNING

- **Before you use the object avoidance system, read this manual to understand the precautions and handling procedures required.**
- **The operator is responsible for the operation of the machine.**
- **This is not a system which can prevent collisions in all circumstances. There are limitations to its performance.**
- **The object avoidance system is not designed to prevent operator carelessness. This includes inattentive or distracted operation.**
- **Obey all safety rules and regulations when you operate the machine.**
- **The operator must always be aware of the condition of the machine and surroundings. Operate the machine in accordance with current conditions.**
- **Do not rely exclusively on the object avoidance system to avoid collision during operation. This can result in serious injury or death.**

When you use the object avoidance system, obey the precautions that follow.

- **Do not needlessly experiment with the object avoidance function.**
- **Do not use the object avoidance function to intentionally stop the machine. Always use the usual stopping procedure.**
- **If the KomVision camera visibility range is not correct, the object avoidance will not operate correctly. Before use, adjust the camera and the machine monitor. For the check procedure to see if the visibility range is correct, see "How to Examine Camera Visibility (4-49)". For any questions regarding the KomVision cameras, consult your Komatsu distributor.**
- **Examine the radar system and surrounding area, including the cover, for any deformity or damage. If the radar system is compromised, it may not correctly sense an object, causing a malfunction.**
  In the event the radar system appears to be damaged or potentially malfunctioning, contact your Komatsu distributor immediately.
- **Do not cover any of the surface of the radar cover with stickers, paint, or anything else. This may prevent the radar from operating correctly and detecting objects.**
- **Only genuine Komatsu replacement parts may be used in the object avoidance system. Use of other parts may cause the system to operate incorrectly, resulting in serious injury or death. Contact your Komatsu distributor for replacement parts.**
- **Only qualified maintenance personnel are authorized to remove or alter radar system components.**

This manual explains how to operate the object avoidance and identifies situations where the system may not operate correctly. It also describes circumstances where the system's operation can make the machine unstable. Not all possible situations and circumstances are described in this manual.
The effectiveness of the object avoidance system varies depending on the state of operation and the conditions around the machine. In some situations, the object avoidance cannot be activated or it cannot operate correctly. Before you use this system, understand that operating conditions can change depending on the work environment.

NOTICE

The radar installed on the machine complies with the radio laws of each country. The radar is licensed in its destination country before dispatch. If you modify a radar or use a broken radar, you violate the law and may face punishment. If the radar is damaged, contact your Komatsu distributor for repair.

- The object avoidance system senses persons and objects using images from the cameras and signals from the radars installed on the machine. If the system senses a person or an object near the machine, a marker shows on the composite image on the machine monitor. The buzzer in the operator cab sounds to warn the operator. Also, an external buzzer sounds to warn workers around the machine.

- If the system senses a person or object near, it decelerates and stops the machine to reduce damage from a collision. This function operates when you start a swing or move operation from a stop, or during a swing or move operation.
- The object avoidance system detects people based on the visual contrast between the person and the background. Thus, the system detects a person better if they wear bright-colored clothes that have high-brightness contrast with the background. The system also detects a person better if they wear a bright-colored hard hat or safety vest.
- The detection precision of this system can vary. Precision depends on the quality of the camera images, which is affected by the environment, machine type, specifications, and other factors.
- The performance of the detection function can be affected by dirty camera lenses, dirty radar covers, and sunlight conditions. Make sure the camera lenses are clean. If you are unsure contact your Komatsu distributor.
- Clean the camera lenses and the radar covers daily before you start work. If the person detection performance is still low after cleaning, contact your Komatsu distributor.

Recommended colors to help the detection of person around the machine

On a job site where the machine is surrounded by soil or concrete, people are better detected if they wear bright blue or green clothes, hard hats, and safety vests.

Precautions When You Use Object Avoidance

“When Object Avoidance Has Failure (3-352)”

“Situations Where Object Avoidance May Not Sense Target Correctly (3-353)”

“Situations Where the Machine May Become Unstable Because of Sudden Stop (3-358)”

“Situations Where You May Be Unable to Evacuate Machine Because of Machine Stop Control (3-359)”

“Situations Where You May Need to Turn Off Machine Stop Control of Object Avoidance (3-360)”

How to Handle Object Avoidance

“Monitor Display (3-361)”

“Function of Object Avoidance (3-362)”

“Monitor Display of Object Avoidance (3-365)”

“How to Set Object Avoidance (3-367)”

Targets of Object Avoidance

Detection target is a person or an object

When the machine is stopped, the system cannot detect stationary objects.

- Persons

  Approximately 1.5 m {4 ft 11 in} or taller

- Objects

  Items approximately 1.5 m {4 ft 11 in} high and 1 m {3 ft 3 in} wide

  REMARK

  The accuracy of the detection and the timing of the alarm depend on the material and shape of the detected object. The surrounding conditions also affect the accuracy and timing.

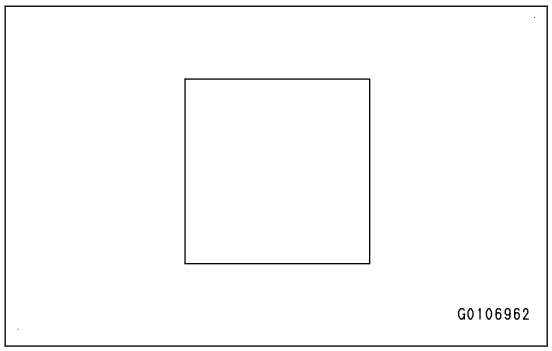

- Construction machinery

  Machines such as a fork lift

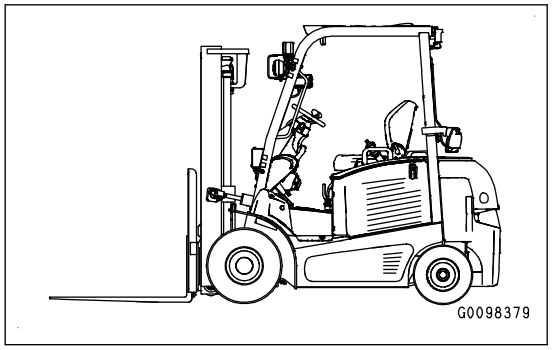

Precautions When You Use Object Avoidance

When Object Avoidance Has Failure

If one of the following problems occurs, object avoidance does not work correctly. The system does not operate.

Consult your Komatsu distributor for repair. Until the repair is completed, do not use object avoidance.

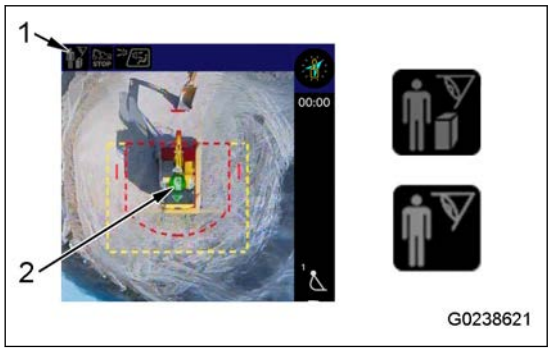

- When the starting switch is turned to the ACC or ON position, the alarm buzzer operates for 2 seconds, and then the buzzer on the object avoidance does not operate 2 times
- When the object avoidance icon (1) is gray and the background is black
- When the camera icon (2) does not flash
- When the daily inspection in “How to Examine Object Avoidance (3-216)” cannot be completed properly

Situations Where Object Avoidance May Not Sense Target Correctly

The following examples describe situations where the system cannot correctly sense a person or an object. This can happen even when the object avoidance system operates correctly.

Detection target person or object

- Tall person (over 2 m {6 ft 7 in}), short person (under 1 m {3 ft 3 in}), small objects
- Seated person, squatted person, bending person, person who lies down
- Person who the shape of is not easy to distinguish, such as person in a rain poncho
- When person or object is not in the view of the camera or the detection range
- Objects made of a material such as wood or resin that does not reflect radio waves

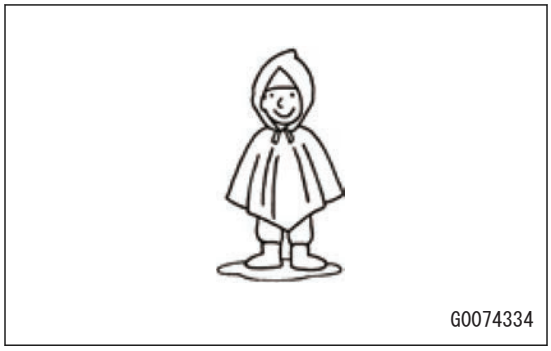

- When person is hidden by surrounding objects and only a part of their body can be seen by the camera
- When person is close to the machine and only a part of their body is seen by the camera

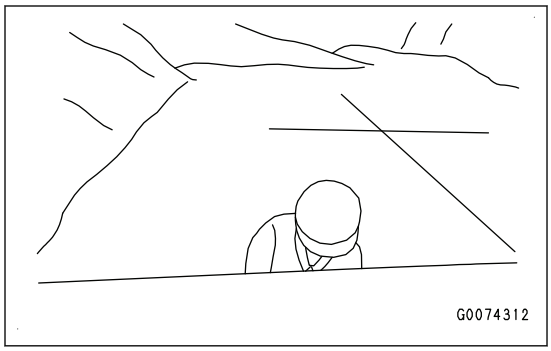

- When person is at the edge of the view of the camera and only a part of their body is seen by the camera
- When person or object is in the blind spot of the radar
- When person or object is too close to the radar

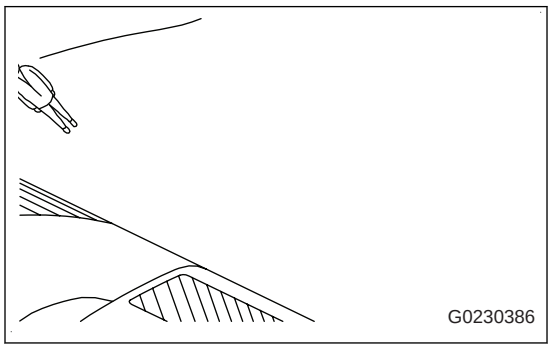

- When person carries large baggage, uses an umbrella, holds a flag, etc., and a part of their body is hidden
- When person wears clothes the color of which blends into the background color, making their shape unclear in the camera image
- When person wears light-colored clothes

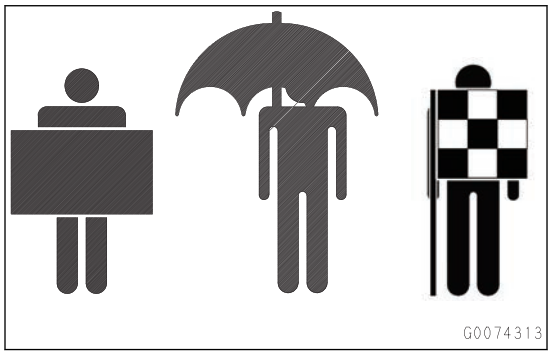

- Person or object is moving quickly
- Person or object suddenly jumps in from the side
- When there is more than one person around the machine

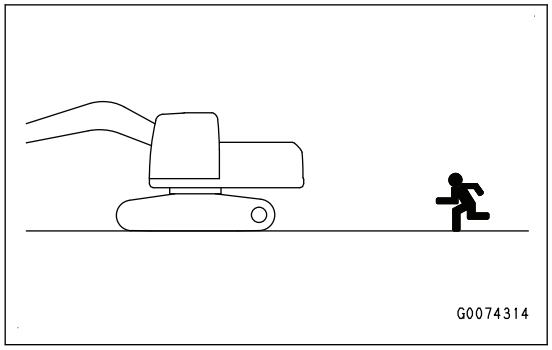

- When multiple people are in the image in a bundle
- When persons or objects are near walls or other obstacles

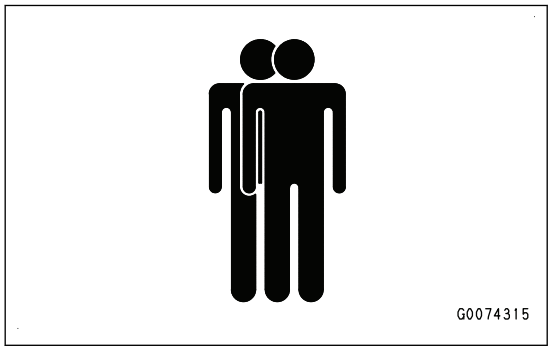

Ambient environment

- In bad weather (rain, snow, fog, etc.)
- When the area is dim or dark
- When there is too much smoke, dirt, or sand around the machine
- When there are obstacles such as cars, walls, or trees around the machine
- When there is steam or smoke around the machine
- When the ground is irregular
- When puddles or snow is on the ground
- When the camera is exposed to strong light
- When the person is brightly lit with illumination during night work

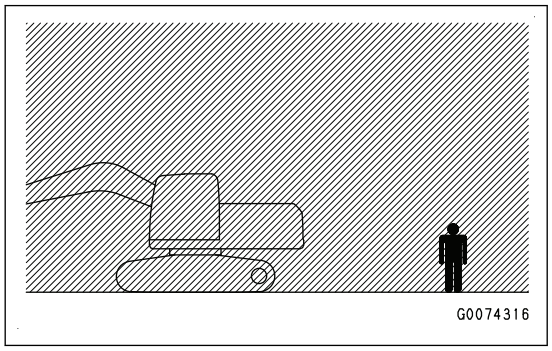

Machine conditions

- When the person or object is on the ground at a different height from where the machine sits

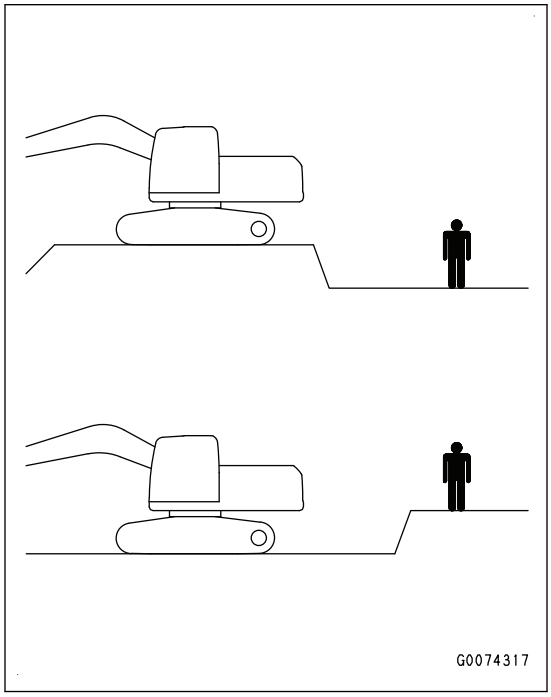

- When a part of the machine is lowered
- When the machine turns
- When the camera or radar is very hot or cold
- When the camera lens, radar, or cover of radar is dirty with sand or mud, or when water drops or snow are attached to them
- When the camera or radar is out of the correct position

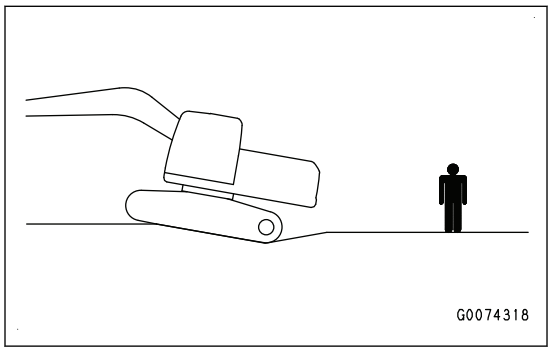

- When the machine travels or operates on a slope
- When the machine sways heavily during travel or work
- When the machine height or contour is changed because of modification
- When the object avoidance has failure
- When the radar or camera installed is other than a Komatsu genuine part
- When the battery level of the machine is very low
- When a failure occurs on the machine body

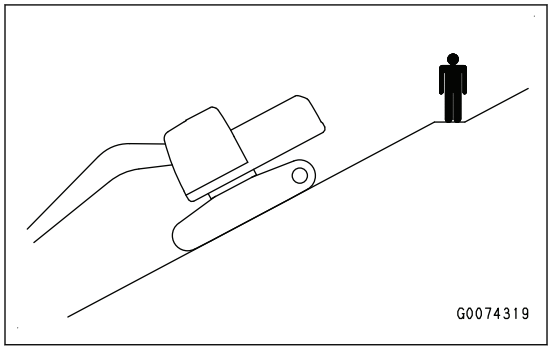

- When the machine turns and moves slowly toward a wall or container
- When the relative speed of the machine to a person or object is low
- When the machine moves at an angle to a wall

Situations where the system may incorrectly sense persons or objects other than the target

The items that follow are examples of the objects and situations that the object avoidance can sense incorrectly.

- Construction signs

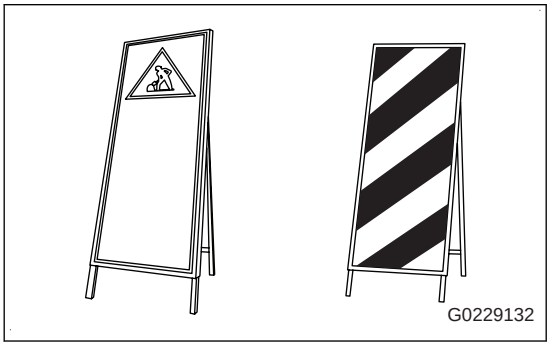

- Lighting equipment for construction

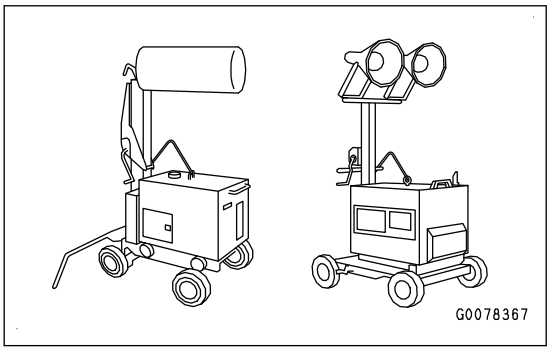

- Fence

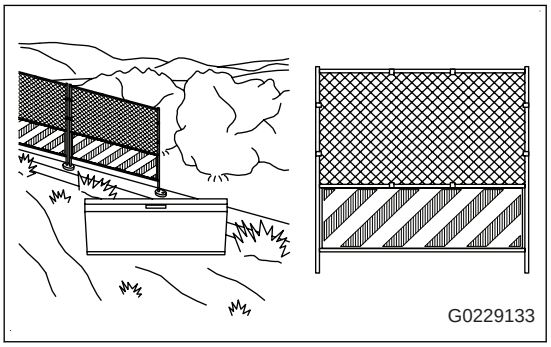

- Wheelbarrow

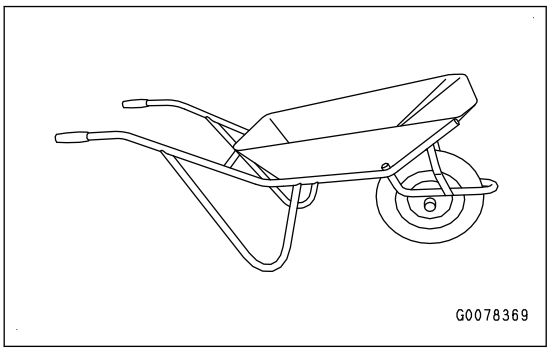

- Pail or can

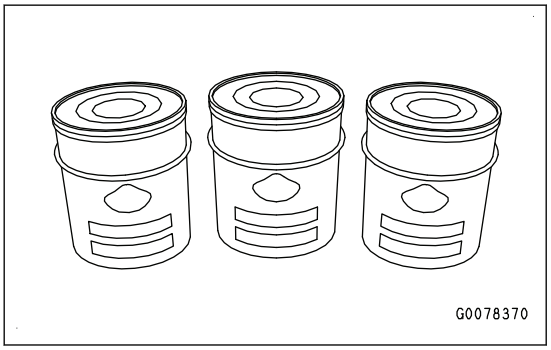

- Piping

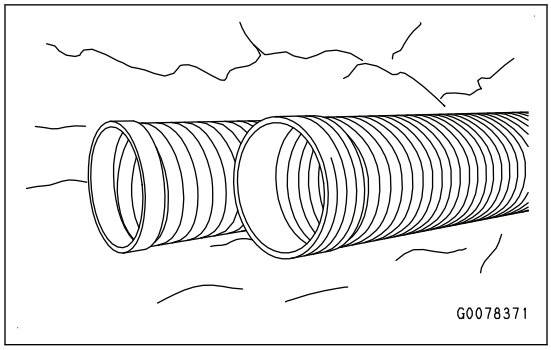

- Tires or dump bodies of dump trucks

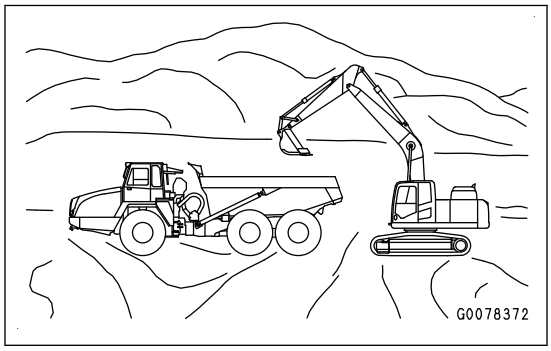

- Shadows of trees and grasses

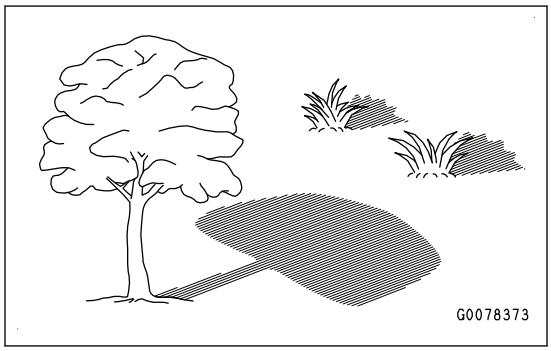

- Edge of excavated ditch
- When the machine is loaded or unloaded to/from the transportation machinery (such as a trailer)
- When the machine travels down on a slope
- When the machine travels to a slope
- When the machine travels over a pool of water
- When the machine travels around a grassy or wooded area
- Metal objects
- When you put the machine in a garage
- When you park the machine between other machines
- When there is external radio wave interference

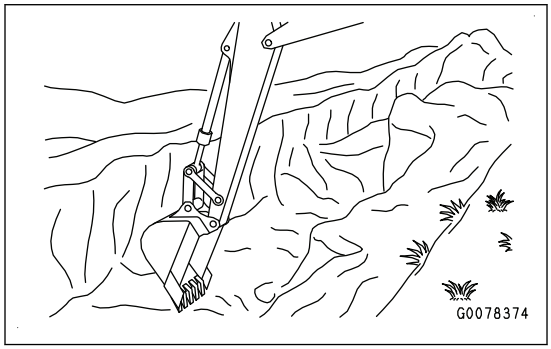

Situations Where the Machine May Become Unstable Because of Sudden Stop

The object avoidance machine stop control can suddenly stop the machine.

The examples below show types of work where a sudden stop can cause the machine to lose stability.

Make sure that the area around the machine is safe before you operate the machine.

For the procedure to set the machine stop control to OFF, see “How to Set Object Avoidance (3-367)”.

- Travel or making a swing operation in a loaded condition

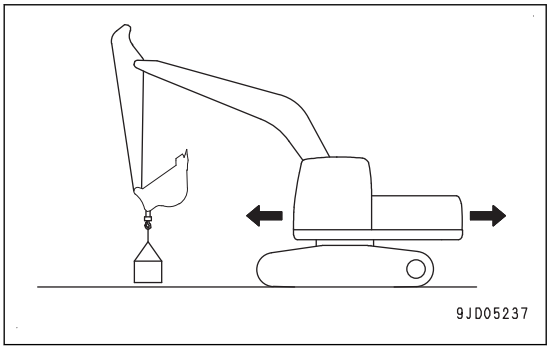

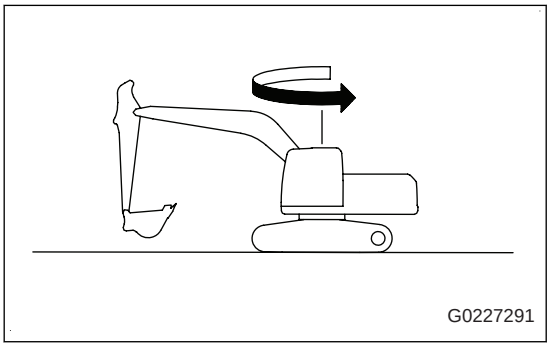

- Travel or work on a steep slope
- Travel or work on a slippery road
- Travel or work on soft ground where there is a danger of landslide

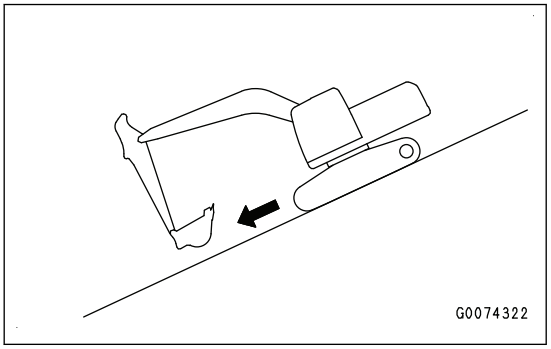

- Making a swing operation on a slope

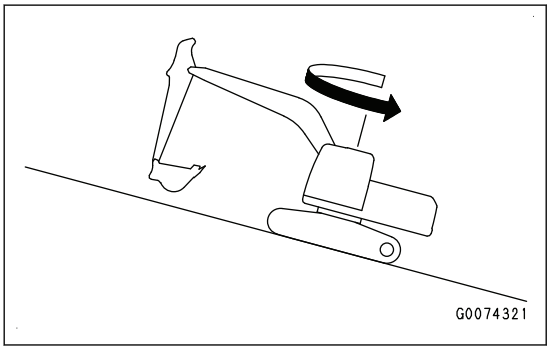

- Travel or work on an irregular road surface

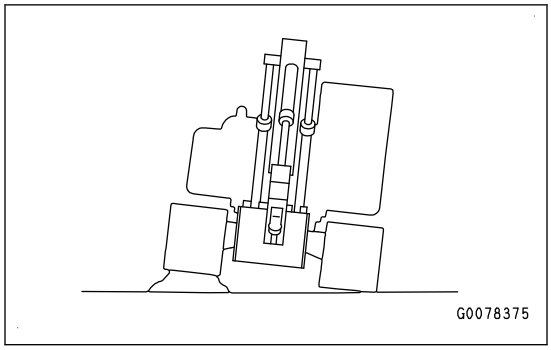

Situations Where You May Be Unable to Evacuate Machine Because of Machine Stop Control

When you operate the machine stop control of the object avoidance, it restricts emergency maneuvers temporarily.

The following are examples of work where the machine stop control can temporarily restrict an emergency evacuation.

Make sure that the area around the machine is safe before you operate the machine.

For the procedure to set the machine stop control to OFF, see “How to Set Object Avoidance (3-367)”.

- Work or demolition work under a cliff

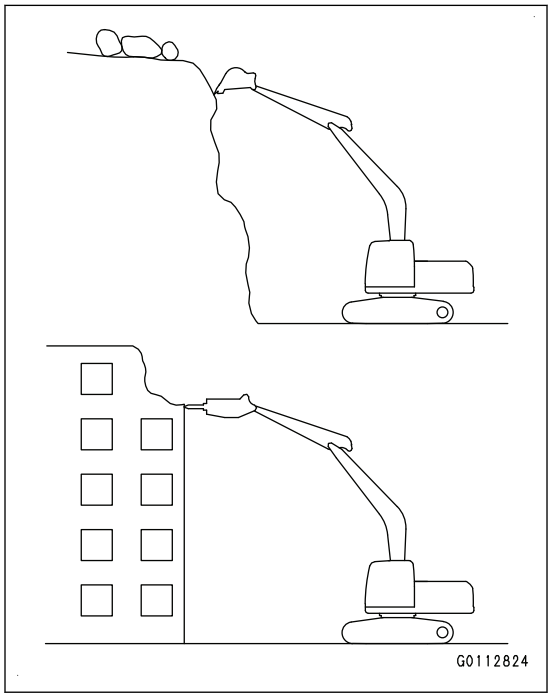

- Work near a cliff or road edge

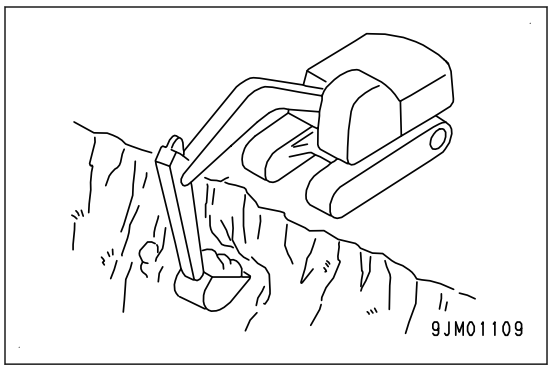

- Work on a structure such as a building

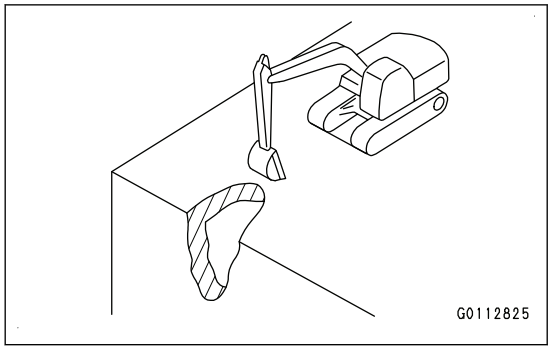

Situations Where You May Need to Turn Off Machine Stop Control of Object Avoidance

CAUTION

The object avoidance system can stop the machine suddenly. This can happen while the machine moves or while the upper structure swings. There is a risk that the shock from the sudden stop may cause you to hit your head or body against the windows or doors in the cab. Always fasten the seat belt and maintain sufficient distance from the windows and the door when you operate the machine.

For the procedure to set the machine stop control to OFF, see “How to Set Object Avoidance (3-367)”.

Travel across a slope

The machine can lose balance if the machine stop control for the object avoidance system activates. This can happen when the machine moves across an area where the angle of the slope changes.

It is highly dangerous to travel across on a slope. If necessary, change the route to go down to a level area. Then, use a safer route, such as a detour.

If it is absolutely necessary to travel across a slope, set the machine stop control to OFF.

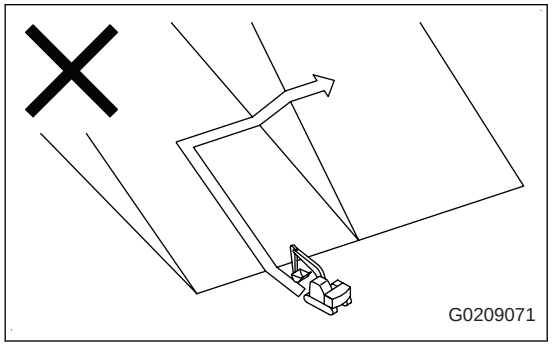

When you load or unload

The machine can lose stability if the machine stop control for the object avoidance system activates during loading or unloading. Set the machine stop control to OFF when you load or unload the machine.

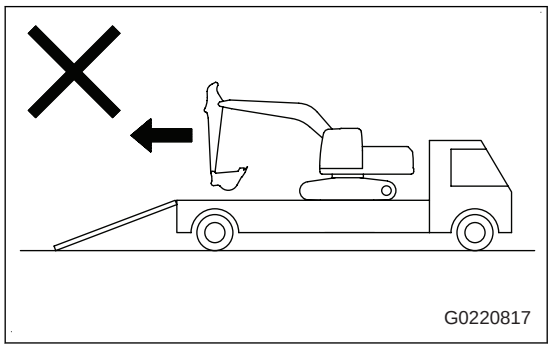

How to Handle Object Avoidance

Monitor Display

(1) Image of bird eye's view

(2) Object avoidance icon

(3) Machine stop control icon

(4) Object avoidance buzzer icon

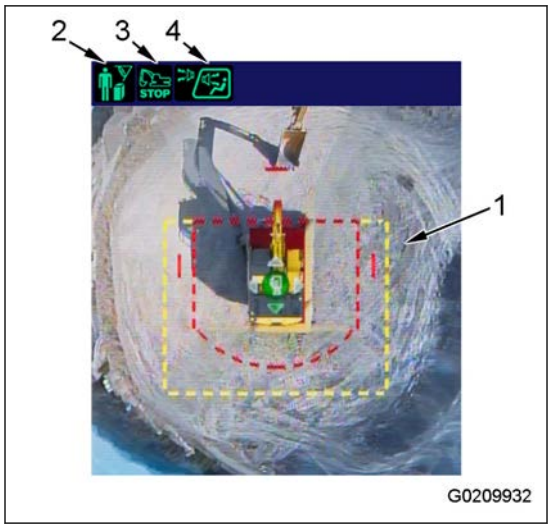

Function of Object Avoidance

WARNING

- **Some colors of the ground or objects in the camera image can make the markers hard to see. Also, some conditions around the machine can make the alarm buzzer hard to hear.**
- **If a buzzer other than the one for object avoidance sounds, it is possible that the object detection alarm will not operate.**
- **You must use the object avoidance system as an auxiliary aid. Always visually make sure that the area around the machine is safe before operating the machine.**

Detection range

The detection system operates in the area defined by the red reference line (A) and the yellow reference line (B).

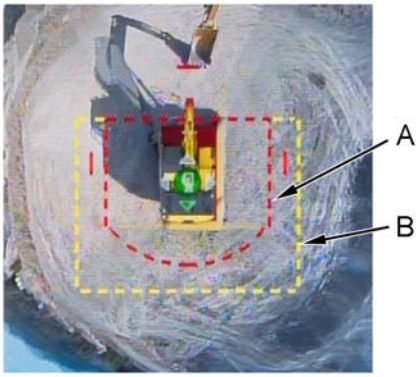

G0209933

Markers shown on the composition image and buzzers

When the object avoidance senses a target in the detection range, it shows a red or yellow marker on the bird's-eye view image. The buzzer in the cab and the external buzzer operate.

The marker expands around the target's detection position, and the system shows it for approximately 1 second.

When the machine stop control senses a target within the red reference line (A), the system shows a red marker. When the machine deceleration control senses a target between the red and yellow reference lines (A and B), the system shows a yellow marker.

The detection range is the combination of the machine stop control range and the machine deceleration control range.

Sensed position	Marker	Cab internal buzzer	External buzzer
Range of machine stop control (Inside of red reference line (A))	Red	Beep and beep (Fast)	Peepy (Same as travel alarm)
Range of machine deceleration control (Between red reference line (A) and yellow reference line (B))	Yellow	Pong (Slow)	Peepy (Same as travel alarm)

How to Stop Object Avoidance

When the system detects a target and the buzzer operates, move the lock lever (g) to the LOCK position (L) to stop the buzzer. While the lock lever is in the LOCK position (L), the buzzer does not operate even if the system detects a new target.

The machine monitor shows markers even when the lock lever is in the LOCK position (L).

When you move the lock lever (g) to the FREE position (F) to start operation, the object avoidance buzzer and the machine stop control function become active.

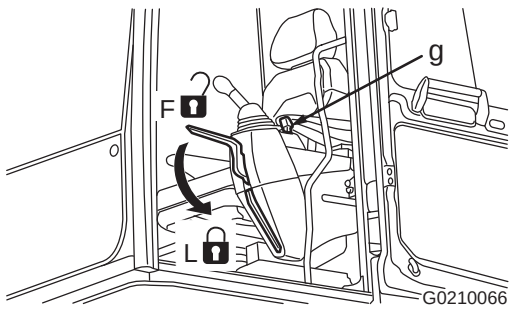

G0210066

Machine stop control

The machine stop control stops the machine if you start to move or swing while the system detects a person or object in the machine stop control range. The machine also stops if the system detects a person in the machine stop control range during a move or swing operation. The machine monitor shows a pop-up (A) at this time.

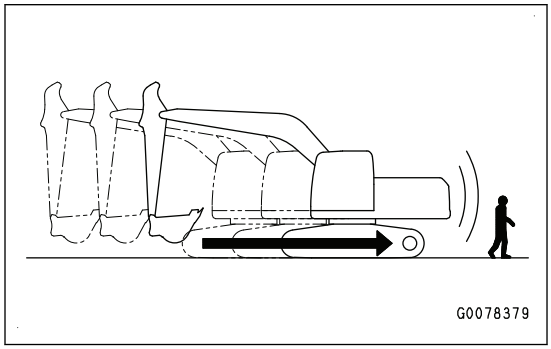

REMARK

You can operate the work equipment even when the machine stop control is in operation.

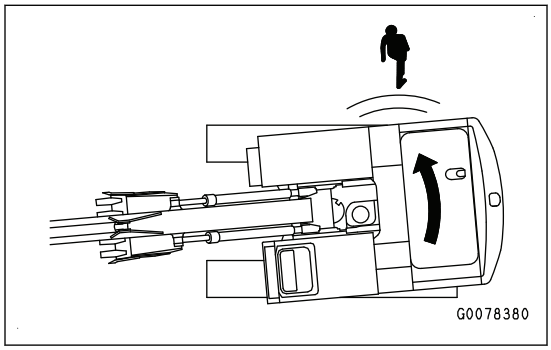

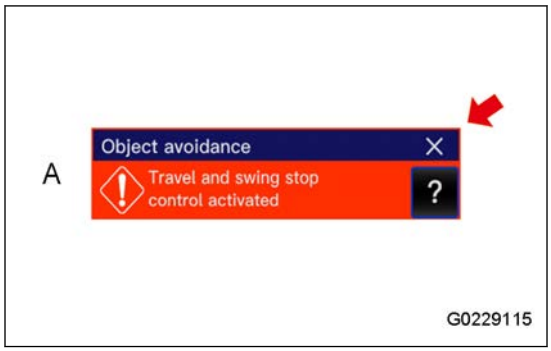

When the system detects a person or object in the machine deceleration control range while the machine is moving, the deceleration control applies the brake based on the travel speed. The machine monitor shows a pop-up (B) at this time.

To resume operation after the object avoidance system stops or decelerates the machine, see “Restoration from machine stop control”.

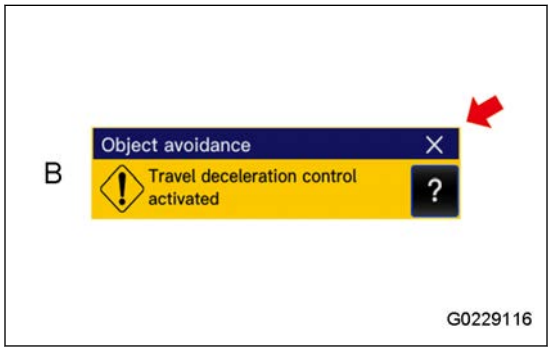

REMARK

When you tap the CLOSE button, the system hides pop-ups (A) and (B). The machine stop control or the machine deceleration control continues to operate even after you close the pop-up.

Restoration from machine stop control

If the object avoidance machine stop control operates, the buzzer sounds, and the machine does not move or the system applies the brakes, move the lock lever (g) to the LOCK position (L). When the lock lever is in the LOCK position (L), the buzzer stops. After you make sure that the area around the machine is safe, move the lock lever (g) back to the FREE position (F). If the system detects no target in the detection range, the machine stop control is canceled, and you can resume work.

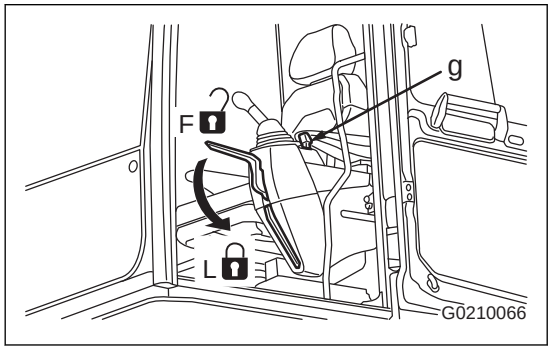

While you push the temporary control cancel switch (1) on the L.H. work equipment control lever, the object avoidance machine stop control is disabled. Move the machine to an area that is clear of people and objects. Make sure that the area around the machine is safe while you move it. The machine monitor shows a pop-up (C) at this time. If the system detects no target in the detection range, the machine stop control cancels.

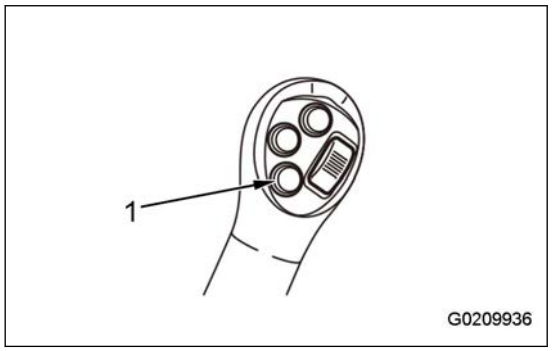

REMARK

Even if you push the temporary control cancel switch (1), the buzzer is not disabled.

If the machine stop control operates by false detection of an object other than the detection target

If the machine stop control operates because of a false detection, a false detection can occur again after you use the lock lever to resume operation. When this happens, do the following procedure.

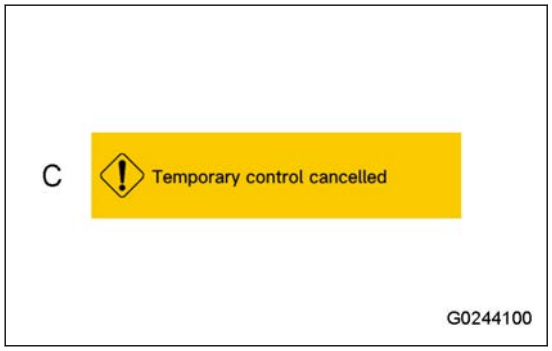

1. While you push the temporary control cancel switch (1), move the machine until the object that caused the false detection is outside the detection range.
2. Make sure that the machine monitor no longer shows the marker for the false detection. Release the temporary control cancel switch (1).

⚠ WARNING

Do not needlessly experiment with the object avoidance function. The system can operate incorrectly. Experimenting with the system can cause an unexpected accident. The icons on the machine monitor show the status of the system. See “Monitor Display of Object Avoidance (3-365)”.

Monitor Display of Object Avoidance

WARNING

In some object avoidance conditions, the color of the object avoidance icon and the color of the markers do not match for a brief time. The machine stop control and the buzzer operate according to the state of the object avoidance icon. When you see the detection state, look not only at the markers but also at the object avoidance icon.

Object Avoidance Icon

The color and display of the object avoidance icon change to show the sensed state.

When you set the object avoidance detection target to “person + object”, icon (A) shows. When the target is “person”, icon (B) is shown.

For the procedure to change the detection target of the object avoidance, see “How to Set Object Avoidance (3-367)”.

Color of icon	Status of detection function
Icon: Green Background: Black	ON No target is sensed.
Icon: Black Background: Yellow	ON A target is sensed in the range of machine deceleration control.
Icon: White Background: Red	ON A target is sensed in the range of machine stop control.
Icon: Gray Background: Black	Disable System failure

A

G0209938

B

G0209939

Machine Stop Control Icon

The machine stop control icon shows the state of the machine control with its color.

When you push the temporary control cancel switch, the machine control stops. But, the color of the machine stop control icon changes according to the position of the detected target, no matter the state of the temporary control cancel switch.

For the procedure to change the ON/OFF of the machine stop control, see “How to Set Object Avoidance (3-367)”.

Color of icon	State of machine stop control
Icon: Green Background: Black	ON Machine stop control is not in operation.
Icon: Black Background: Yellow	ON Machine deceleration control is in operation.
Icon: White Background: Red	ON Machine stop control is in operation.

G0209940

Color of icon	State of machine stop control
Icon: Gray Background: Black	Disable Temporarily canceled or lock lever in LOCK position Or, after the lock lever is set to the FREE position and before start of the work
Icon: None Background: Black	Disable Machine stop control is set to OFF Or, system malfunction

Object Avoidance Buzzer Icon

The object avoidance buzzer icon shows the buzzer operation state with its color.

Icon (C) is shown when you set the buzzers inside and outside the cab to operate. Icon (D) is shown when you set only the buzzer in the cab to operate.

For how to change the buzzer sound, see “How to Set Object Avoidance (3-367)”.

Color of icon	State of buzzer in cab	State of external buzzer
Icon: Green Background: Black	ON The buzzer is not in operation.	
Icon: Black Background: Yellow	ON Pong ... pong (slow)	ON The buzzer is not in operation.
Icon: White Background: Red	ON Short beeps (fast)	ON Long beeps (same as travel alarm)
Icon: Gray Background: Black	Disable Lock lever in LOCK position Or, after the lock lever is set to the FREE position and before start of the work	
Icon: None Background: Black	Disable The buzzer is set to OFF or system malfunction.	

If a target is sensed in the range of the machine stop control, the icon and the buzzer continue to operate for about 3 seconds after the target is no longer detected.

⚠ CAUTION

- **When the machine stop control is set to OFF, the machine stop control does not operate even if the buzzer operates.**
- **Even if you set the lock lever to the FREE position, the object avoidance buzzer does not sound. The buzzer sounds when you start the operation. Before you start work, the buzzer does not operate. Make sure that the area around the machine is safe before starting work.**
- **Before you start the operation, make sure that the operation state icons for the buzzer and the machine stop control are shown.**

How to Set Object Avoidance

CAUTION

The object avoidance buzzer sounds when you start work. Before you start work, the buzzer does not operate. Make sure that the area around the machine is safe before starting work.

You can change the object avoidance settings for the detection target, the buzzer, and the machine stop control. The object avoidance settings are stored for each operator ID. The system applies the same settings when the same operator logs in again.

Tap “Object Avoidance Icon” or “Machine Stop Control Icon” or “Object Avoidance Buzzer Icon”.

G0209944

You can change the setting for each item to ON or to OFF.

Tap All ON (5) or All OFF (6) to change the setting for all the items.

How to set Detection Target

Tap Detection Target (1) to set Detection Target.

- Person + Object: Senses both of persons and objects.
- Person: Senses persons only.

How to set Machine Stop Control

Tap Machine Stop Control (2) to change the ON or OFF setting of Machine Stop Control.

How to set External Buzzer

Tap External Buzzer (3) to change the ON or OFF setting of External Buzzer.

How to set In-cab buzzer

While External Buzzer and Machine Stop Control are OFF, tap In-cab buzzer (4) to change the ON or OFF setting of In-cab buzzer.

When you turn External Buzzer or Machine Stop Control ON while In-cab buzzer is OFF, In-cab buzzer automatically turns ON.

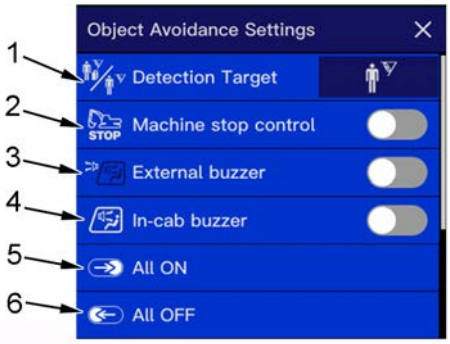

G0229118

Remote Courtesy Lights Function

This machine has remote courtesy lights.

This function illuminates around so the operator can safely get on and off the machine.

You can set the type of light and operation time of the light to be used in the remote courtesy lights function.

For the setting of the remote courtesy light function, see “Remote Courtesy Lights Setting (3-67)”.

How to Use Remote Courtesy Lights Function When You Get on Machine

1. When you open the operator cab door, the room lamp (1) comes on (20 minutes).

   The working lamps (work equipment, deck) (2), working lamps (on cab) (3), and entry switch (4) (if equipped) come on for the duration set by “Remote Courtesy Lights Setting (3-67)”.

   REMARK

   The room lamp (1) stays lit until you do step 2.

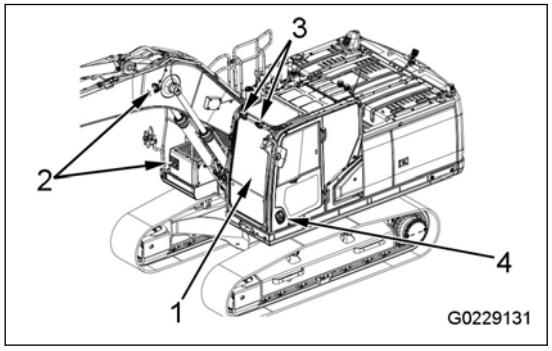

2. When you close the operator cab door, the room lamp (1) goes off.

   The working lamps (work equipment, deck) (2), working lamps (on cab) (3), and entry switch (4) (if equipped) come on for the duration set by “Remote Courtesy Lights Setting (3-67)”.

   REMARK

   If step 2 is done before each lamp that came on in step 1 goes off, the lamps do not go off and stay on for the duration set by “Remote Courtesy Lights Setting (3-67)” again.

3. When you turn the starting switch from the OFF position (A) to the ACC position (B), the room lamp (1), working lamps (work equipment, deck) (2), working lamps (on cab) (3), and entry switch (4) (if equipped) go off.

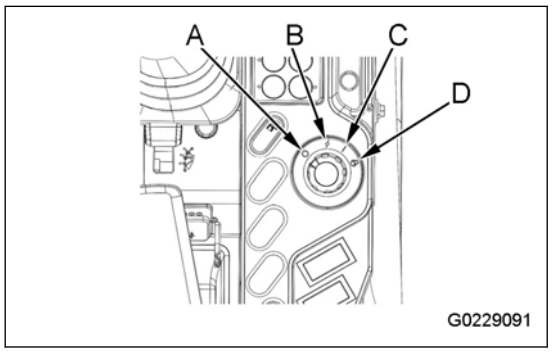

How to Use Remote Courtesy Lights Function When You Get off Machine

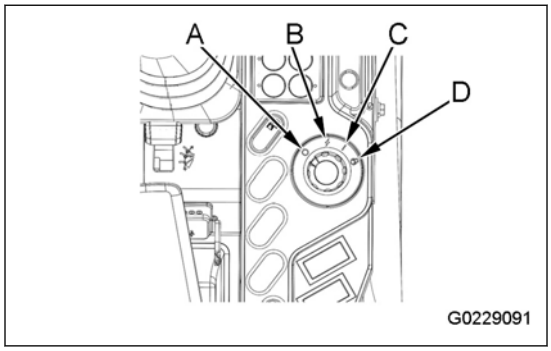

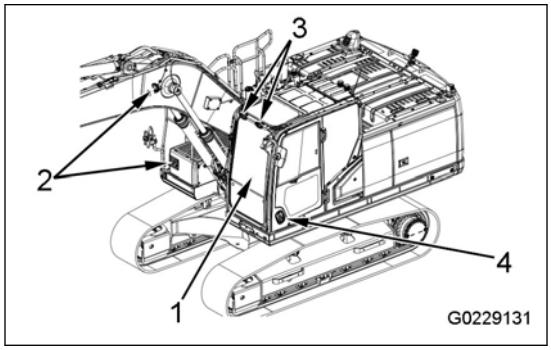

1. When you turn the starting switch from the ACC position (B) to the OFF position (A), the room lamp (1), working lamps (work equipment, deck) (2), working lamps (on cab) (3), and entry switch (4) (if equipped) come on for the duration set by “Remote Courtesy Lights Setting (3-67)”.
2. When you open the operator cab door, the room lamp (1) comes on (20 minutes).

   The working lamps (work equipment, deck) (2), working lamps (on cab) (3), and entry switch (4) (if equipped) come on for the duration set by “Remote Courtesy Lights Setting (3-67)”.

   REMARK

   If step 2 is done before each lamp that came on in step 1 goes off, the lamps do not go off and stay on for the duration set by “Remote Courtesy Lights Setting (3-67)” again.
3. When the operator cab door is closed, the room lamp (1) goes off. The working lamps (work equipment, deck) (2), working lamps (on cab) (3), and entry switch (4) (if equipped) come on for the duration set by “Remote Courtesy Lights Setting (3-67)”.

   REMARK

   If step 3 is done before each lamp that came on in step 2 goes off, the lamps do not go off and stay on for the duration set by “Remote Courtesy Lights Setting (3-67)” again.

2D Boundary Control

(If equipped)

⚠ WARNING

- **The operator is responsible for the safe operation of the machine.**
- **The 2D boundary control is not designed to prevent operator carelessness such as inattentive operation or distraction.**
- **The operator must operate the machine safely in accordance with all the safety rules and regulations.**
- **The operator must be careful of the condition of the machine at all times.**
- **Operate the machine visually. Use the monitor screen as an aid for the operation.**
- **If you rely too much on the 2D boundary control during the operation, it can cause an accident (such as a collision), personal injury, or death. While you operate the machine, do not rely too much on the 2D boundary control.**
- **Do not use the 2D boundary control to stop the machine without the usual stopping operation.**
- **If the machine cannot decelerate or stop in time because of conditions (inclination, ground stability, weight of load/attachment), it possibly decelerates suddenly.**
- **Even if the operator moves the work equipment to avoid the danger, the machine does not operate as desired in some cases. Be very careful when you do the work.**
- **When you use the 2D boundary control, read “How to Set 2D Boundary Control (3-378)” and make sure that the 2D boundary control is “ON”.**
- **If the 2D boundary control is “OFF”, the machine control is not done. When you use the 2D boundary control, make sure that the state of the function is “enabled”.**
- **If the undercarriage moves unexpectedly, there is a risk of collision because of a change in the relative position with obstacles.**
- **When you replace the attachment, do the monitor setting and adjustment correctly in response to the attachment. The 2D boundary control does not operate correctly in some cases.**

⚠ CAUTION

- **Some attachments with movable parts, such as a slide arm, cannot stop at the set wall. Accordingly, do not use the 2D boundary control.**
- **Devices such as tilt rotator, tilt bucket, and grapple can also hit the set wall in some postures. Set the set wall with sufficient margin.**

2D boundary control does the control that follows when the machine comes near the wall preset around the machine (hereinafter referred to as the set wall) or the set swing angle position (hereinafter referred to as the set swing angle).

- Decelerate and stop the operation started by the operator to prevent contact with the set wall and set swing angle.
- The monitor display and buzzer operate to give a warning to the operator when the machine comes near the set wall and the set swing angle.

NOTICE

- **The work equipment and swing cannot stop at the set wall position in some conditions such as the load weight or the inclination of the machine.**
  Set the working range with sufficient space from the position where you want to limit the working range.
- **When you move the machine after the 2D boundary control is set, the set wall moves with the center of the machine as a reference. After the machine travels, set 2D boundary control again.**
- **If 2D boundary control is used for a long time, the set wall can be moved by the influence of the operating environment on the sensor. If this phenomenon occurs, set 2D boundary control again.**
- **The work equipment can stop long before the set wall, based on its posture. For the left wall/right wall setting, the swing speed decreases before the set wall, and stops.**
  If the control is effective and it interferes with the work, use the control temporary cancel function or set the 2D boundary control to OFF.

Prohibited Operations When You Use 2D Boundary Control

Prohibition of Function During Lifting Work

While you do a lifting work with the work equipment, do not use the 2D boundary control.

If the 2D boundary control causes a deceleration or stop, the lifted load could cause damage to the surrounding structure or cause serious personal injury or death.

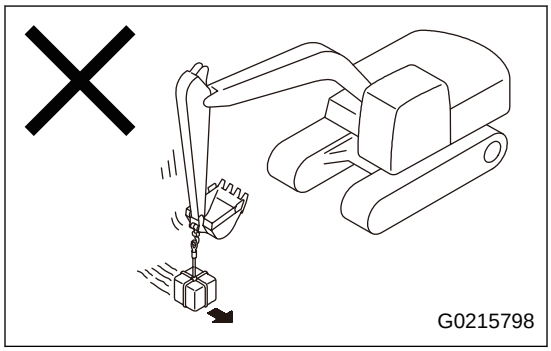

Prohibition of Function During Demolition Work

While you do a demolition work with the work equipment, do not use the 2D boundary control.

If the 2D boundary control causes a deceleration or stop, it could cause demolished objects to break down, surrounding structures to get damage, or serious personal injury or death.

NOTICE

In addition to the above, operations that can cause serious personal injury or death are prohibited.
For details, see “Prohibited Operations (2-37)”.

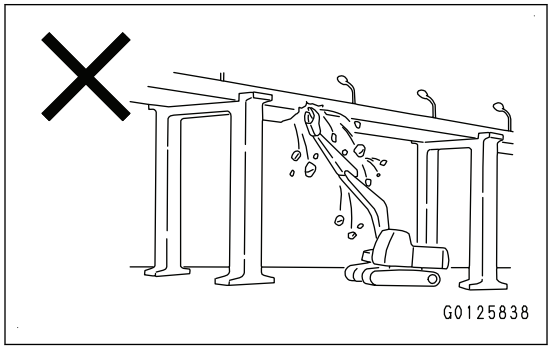

Precautions When You Use 2D Boundary Control

When There is Possibility That Machine Becomes Unstable Because of Sudden Stop

The machine stop control of the 2D boundary control can operate and suddenly stop the machine.

Examples of works where sudden stops can let the machine lose stability are shown below.

Be sure of the safety around you before you operate the machine.

For the procedure to set the machine stop control to OFF, see “How to Set 2D Boundary Control (3-378)”.

- When you do the work on a steep slope
- When you do the work on a slippery road
- When you do the work on soft ground where there is a danger of landslide

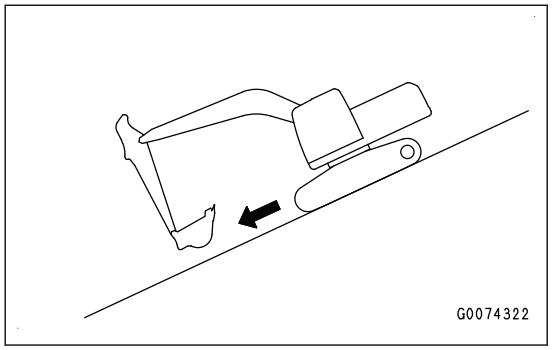

- Make a swing operation on a slope

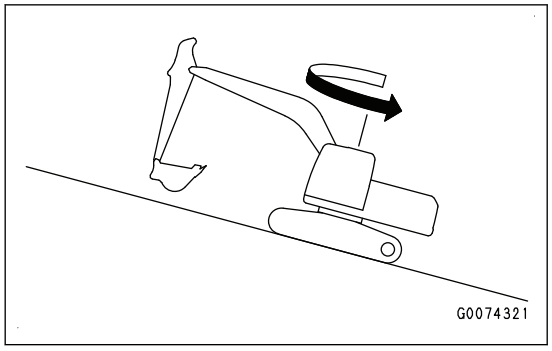

- When you do the work on a rough road

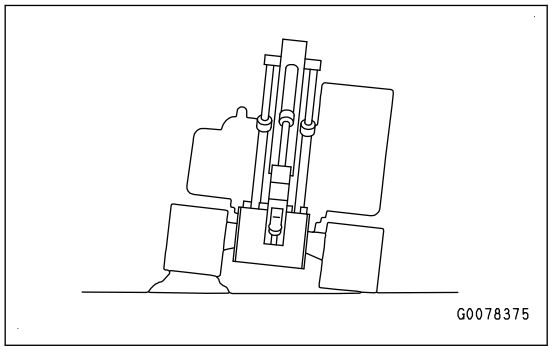

When There is Possibility That You Cannot Evacuate Machine Because of Machine Stop Control

CAUTION

If the emergency evacuation operation is temporarily restricted while the 2D boundary control is activated, push the temporary control cancel switch to do the evacuation operation.

If the machine stop control of the 2D boundary control is activated, the evacuation operation in an emergency can be temporarily restricted.

The works that follow are examples where the operation of the machine stop control can temporarily restrict the escape operation in an emergency.

Be sure of the safety around you before you operate the machine.

For the procedure to set the machine stop control to OFF, see “How to Set 2D Boundary Control (3-378)”.

- Work under a cliff

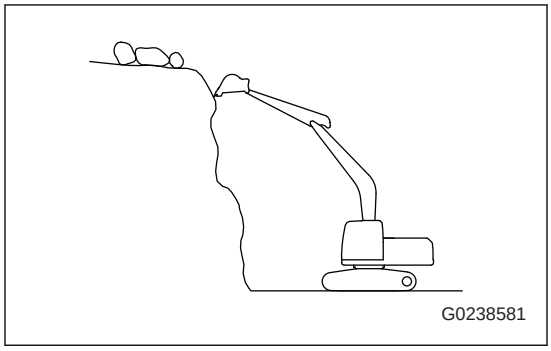

- Work near a cliff or road edge

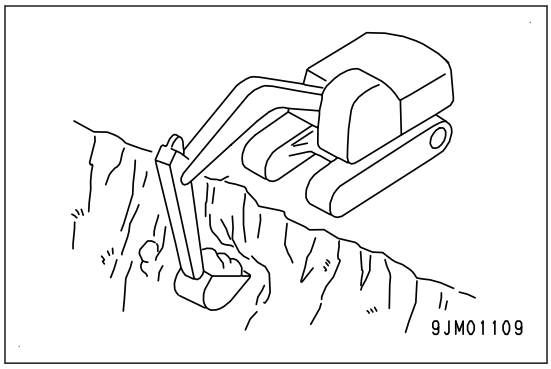

- Work on a structure such as a building

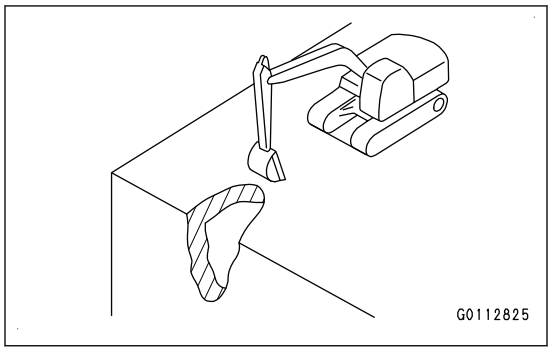

2D Boundary Control

WARNING

- **It is not easy to hear the buzzer sound in some conditions around the machine.**
- **If a buzzer other than the 2D boundary control operates, the alarm when the machine goes near the set wall possibly does not operate.**
- **Use the 2D boundary control as an aid. Make sure of the safety around the machine visually when you work.**

The 2D boundary control automatically decelerates the work equipment and swing operated by the operator to stop the machine just before the set wall.

Setting range of 2D boundary control

- Set the set walls horizontally (1) or vertically (2) to the front, top, bottom, right and left of the machine.
- You can set the angle to limit the swing of the upper structure to the right and left.

For the setting range, see the icon shown on the monitor.

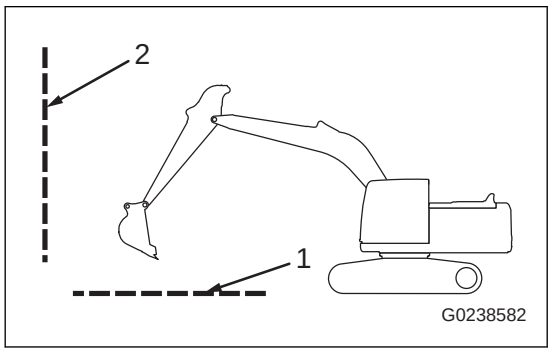

In 2D boundary control, when the machine goes near the set wall, the icon on the monitor is shown in red or yellow, and the in-cab buzzer operates.

Relationship with the set wall	Icon	In-cab buzzer
Out of working range limit	Red	One long beep (Continuous alarm)
Position of machine stop control	Yellow	Continuous beeps (fast) Only for swing angle limit: Continuous beeps (slow)
In range of machine deceleration control	Yellow	Continuous beeps (Slow)

Monitor Display of 2D Boundary Control

2D boundary control icon

The 2D boundary control icon shows the controlling state of the 2D boundary control by the change of the color of the wall around the icon.

Wall color around icon	Function status
Red	Abnormal When the work equipment is at 500mm {1 ft 8 in} or more from the machine control position
Yellow	ON While the machine is stopped in the range of machine stop control or While the machine decelerates in the range of machine deceleration control
Green	ON Shows that control is enabled for the wall
Gray	OFF Temporary control cancel in operation While travel operation is sensed
All walls red	Malfunction
No	No function

G0238622

G0238623

CAUTION

If the swing angle limit function is set only on one side, the left (right) swing angle limit restricts only the left (right) swing.
Accordingly, if the machine turns to the right (left) while only the left (right) swing angle limit is set, the deceleration and stop control is not done.

Swing limit display

The swing limit display shows the control state of the swing angle limit by the change of the line color on the circumference.

- If you set the right and left swing angle limits, the swing limit display (1) is shown with lines at the two ends of the arc.
- If the swing angle limit is set only on one side, the swing limit display (2) shows the set swing angle with a line and the set direction with an arrow.

Icon arc color	Function status
Red	Abnormal When the work equipment is at 500mm {1 ft 8 in} or more from the machine control position
Yellow	ON While the machine is stopped in the range of machine stop control or While the machine decelerates in the range of machine deceleration control
Green	ON Shows that control is enabled for the wall
No	OFF Temporary control cancel in operation While travel operation is sensed or No function
Red all around	Malfunction

G0238624

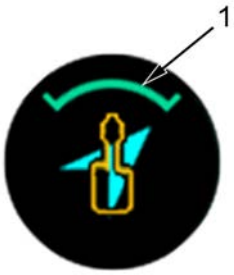

G0238625

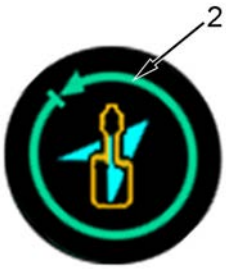

G0238626

2D Boundary Control During Travel

CAUTION

When the machine travels, the limit range set by the 2D boundary control moves based on the center of the machine. After the travel is completed, examine the setting to make sure that the limit range is correct.

When you start the travel while the 2D boundary control is ON, the 2D boundary control becomes disabled. A pop-up (A) is shown on the machine monitor at this time.

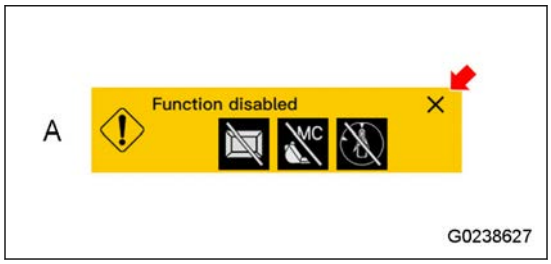

In addition, 10 seconds or more after the machine starts to travel, the 2D boundary control goes OFF. A pop-up (B) is shown on the machine monitor at this time.

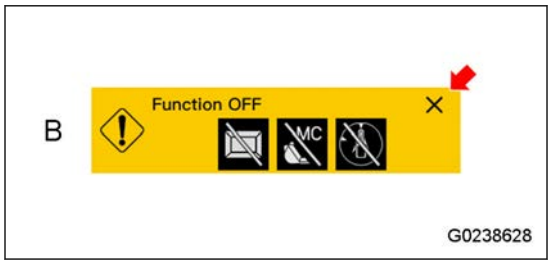

REMARK

If the travel time is less than 10 seconds, the setting of the 2D boundary control is saved. After the travel is completed, the 2D boundary control will be ON.
If the travel time is 10 seconds or more, the setting of the 2D boundary control is deleted. After the travel is completed, the 2D boundary control will be OFF.
When you tap the CLOSE button, the pop-ups (A) and (B) are hidden. Even in this case, the function stays disabled or OFF during the travel.

How to Temporarily Disable 2D Boundary Control

CAUTION

If you push the temporary control cancel switch (1) with the lever activated while the stop control is in operation, the work equipment moves suddenly.
Set the lever to the NEUTRAL position, and push the temporary control cancel switch (1).

While the temporary control cancel switch (1) on the L.H. work equipment control lever is pushed, the control to the machine is disabled, and the machine operates as operated by the operator.

Secure the safety around the machine when you operate it.

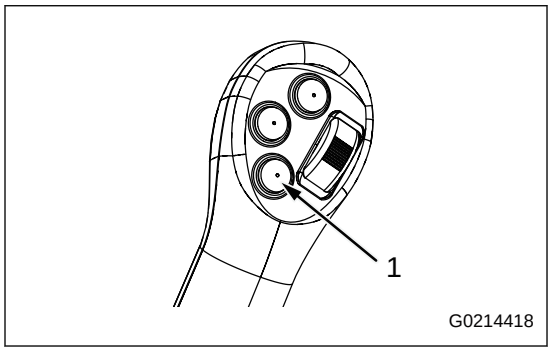

How to Set 2D Boundary Control

You can change between the wall setting and swing angle limit setting of the 2D boundary control.

1. Tap the 2D boundary control icon (1) to show “2D Boundary Control Settings” screen.

G0238629

REMARK

You can also tap the bird’s eye view icon (2) to show “Feature selection” screen and then tap “2D Boundary Control Settings” (3) to show “2D Boundary Control Settings” screen.

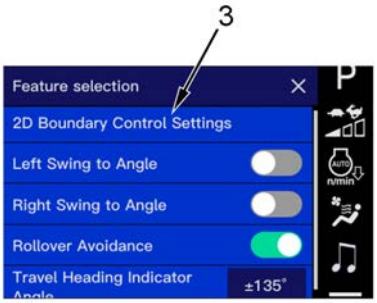

G0238630

2. Do the settings that follow on “2D Boundary Control Settings” screen.

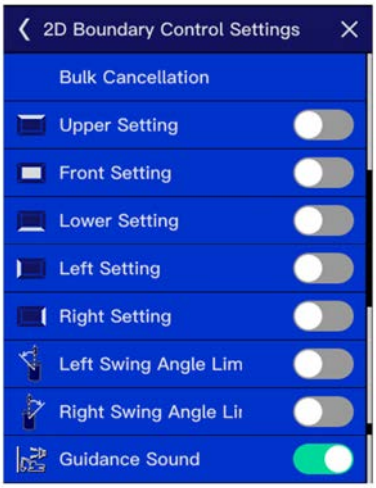

G0238631

How to Set 2D Boundary Control (Upper Wall)

The upper wall setting of the 2D boundary control is set based on the upper end of the attachment and arm contour (1).

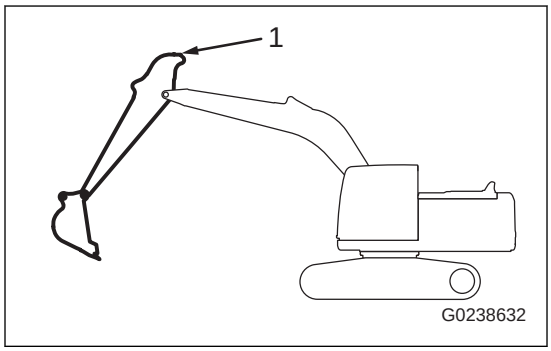

1. Move the arm and attachment to the position where you want to set the upper wall.
2. When you tap “Upper Setting” toggle switch (2) at the position where you want to set the upper wall, the ON/OFF of “Upper Setting” changes.

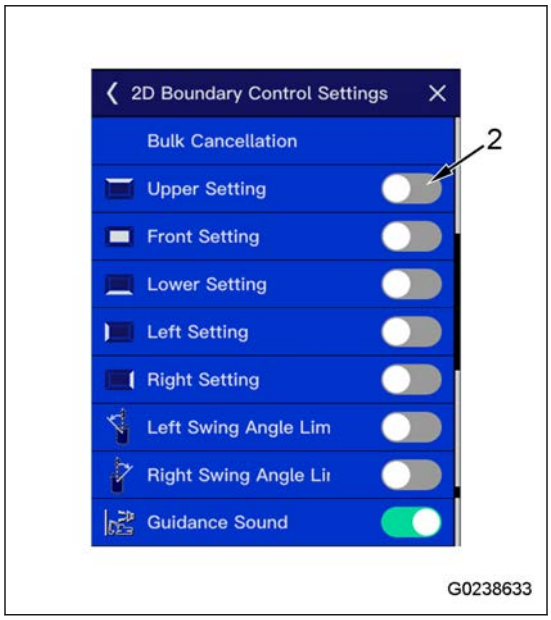

3. When the settings are applied, “Settings changed.” is shown.

   When you tap the checkmark button (3), the screen goes back to “2D Boundary Control Settings” screen.

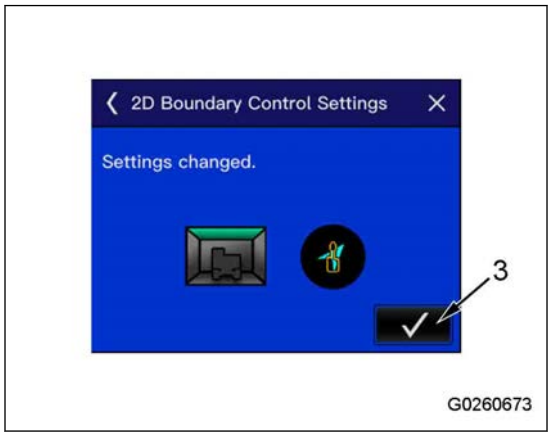

How to Set 2D Boundary Control (Front Wall)

The front wall setting of the 2D boundary control is set based on the front end of the attachment contour (1).

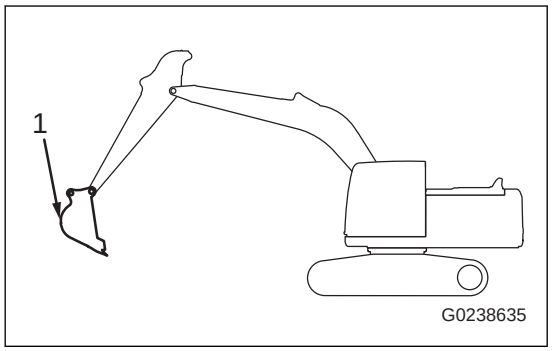

1. Move the attachment to the position where you want to set the front wall.
2. When you tap “Front Setting” toggle switch (2) at the position where you want to set the front wall, the ON/OFF of “Front Setting” changes.

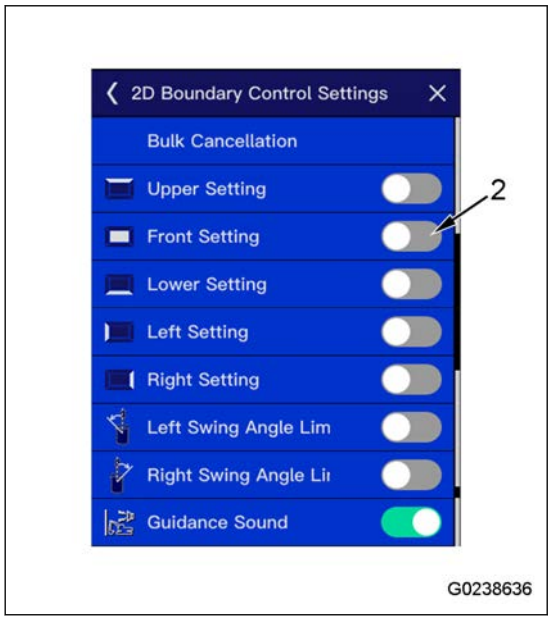

3. When the settings are applied, “Settings changed.” is shown.

   When you tap the checkmark button (3), the screen goes back to “2D Boundary Control Settings” screen.

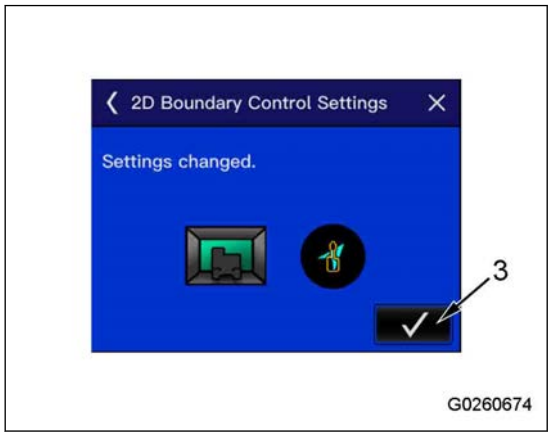

How to Set 2D Boundary Control (Lower Wall)

The lower wall setting of the 2D boundary control is set based on the end (1) of the attachment cutting edge.

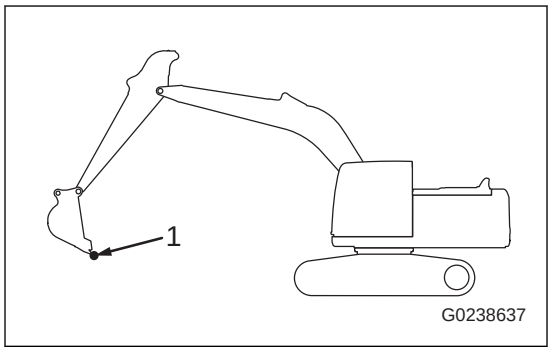

1. Move the end (1) of the attachment cutting edge to the position where you want to set the lower wall.
2. Tap “Lower Setting” toggle switch (2) at the position where you want to set the lower wall.

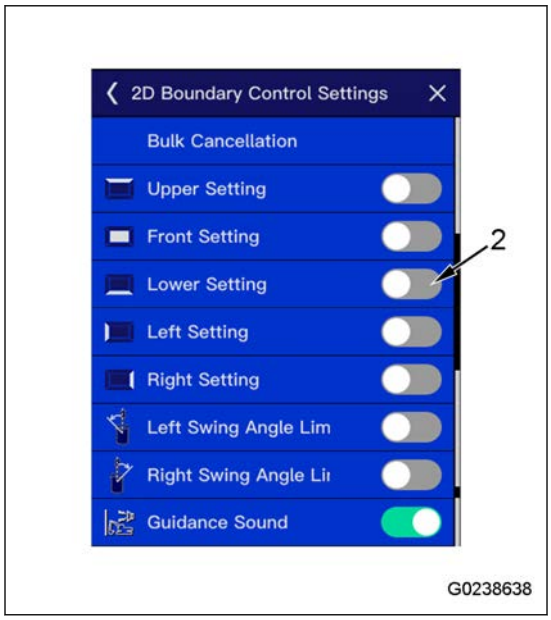

3. “Lower Setting” screen is shown.

   When you tap the checkmark button (3), the lower wall is set at the end position (1) of the attachment cutting edge.

   Tap the numeric input button (4), and the numeric keypad screen is shown.

   REMARK

   The numeric value changes in real time in response to the end position (1) of the attachment cutting edge.

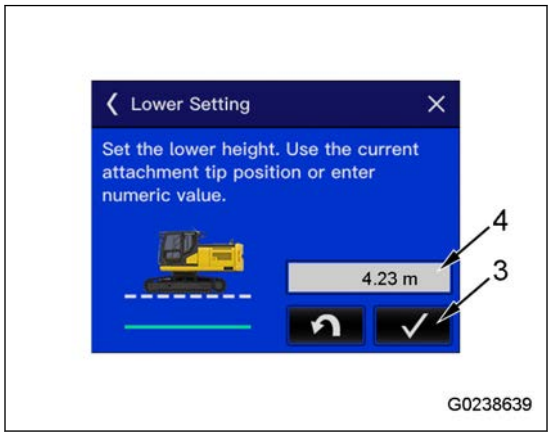

4. When you input the numeric value on the numeric keypad screen and tap the checkmark button (5), the lower wall is set based on the input numeric value.

   REMARK

   The numeric value is based on the ground position.
   If you set it to the position at a depth of 1m {3 ft 3 in} from the ground surface, input “-1 m”.
   If you set it to the position at a height of 1m {3 ft 3 in} from the ground surface, input “1 m”.

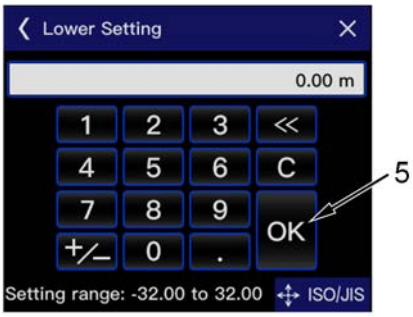

G0238640

5. When the settings are applied, “Settings changed.” is shown.

   When you tap the checkmark button (6), the screen goes back to “2D Boundary Control Settings” screen.

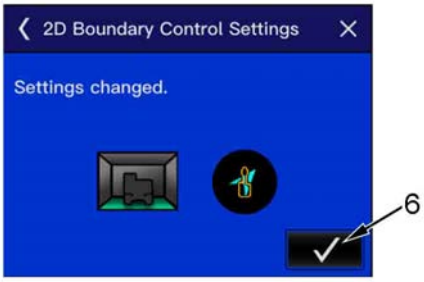

G0260675

How to Set 2D Boundary Control (Left Wall)

The left wall setting of the 2D boundary control is set when you set 2 control points based on the end (1) of the attachment cutting edge.

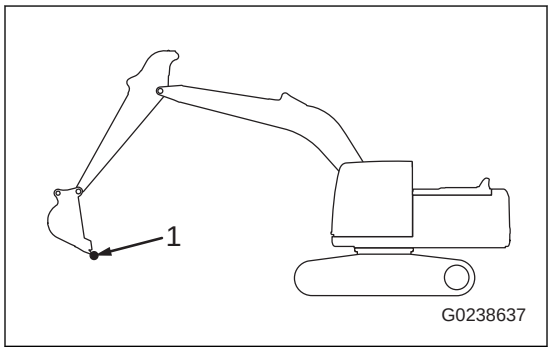

1. Move the end (1) of the attachment cutting edge to the position where you want to set the left wall.
2. Tap “Left Setting” toggle switch (2) at the position where you want to set the left wall.

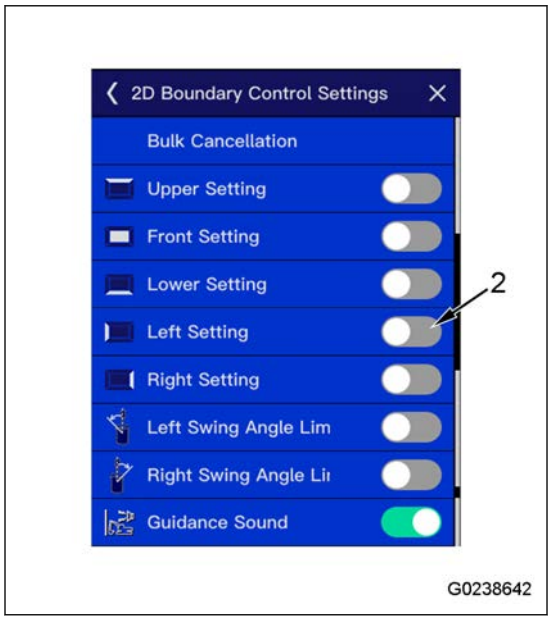

3. The first control point setting screen of the left wall is shown.

   When you tap the checkmark button (3), the end position (a) of the attachment cutting edge is set as the reference for the first point.

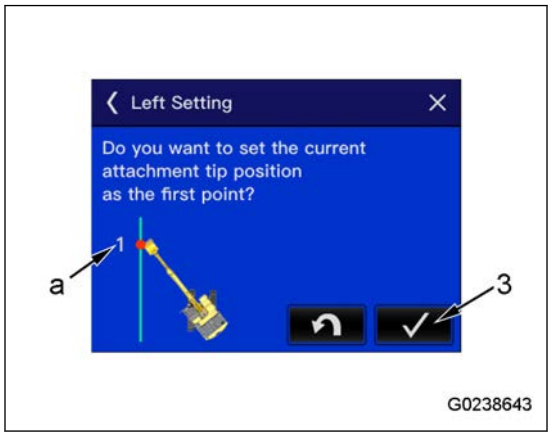

4. The second control point setting screen of the left wall is shown.

   Move the end (1) of the attachment cutting edge from the position where you set the first point to the position where you want to set the second point.

   When you tap the checkmark button (4), the end position (b) of the attachment cutting edge is set as the reference for the second point.

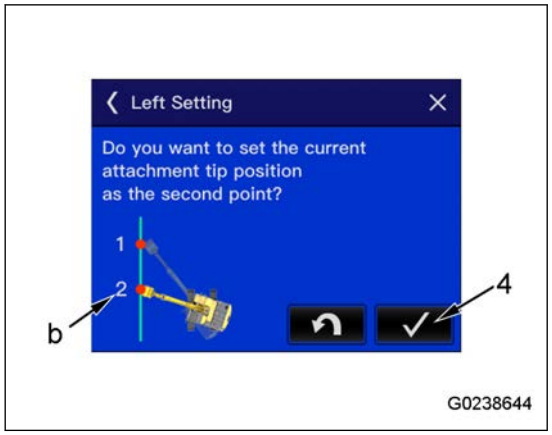

5. When the settings are applied, “Settings changed.” is shown.

   When you tap the checkmark button (5), the screen goes back to “2D Boundary Control Settings” screen.

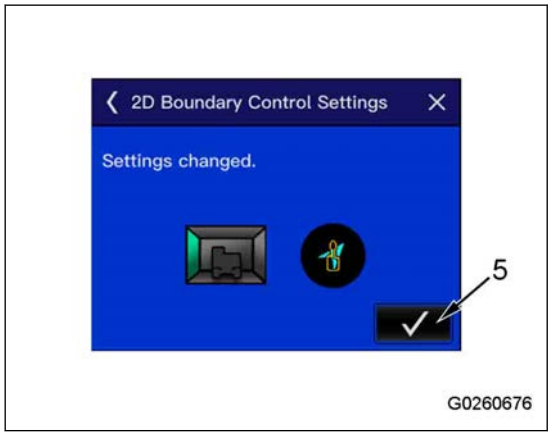

How to Set 2D Boundary Control (Right Wall)

The right wall setting of the 2D boundary control is set when you set 2 control points based on the end (1) of the attachment cutting edge.

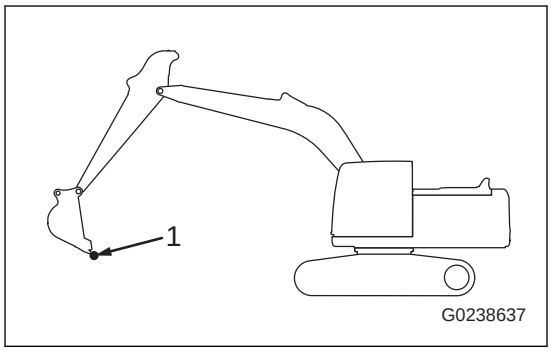

1. Move the end (1) of the attachment cutting edge to the position where you want to set the right wall.
2. Tap “Right Setting” toggle switch (2) at the position where you want to set the right wall.

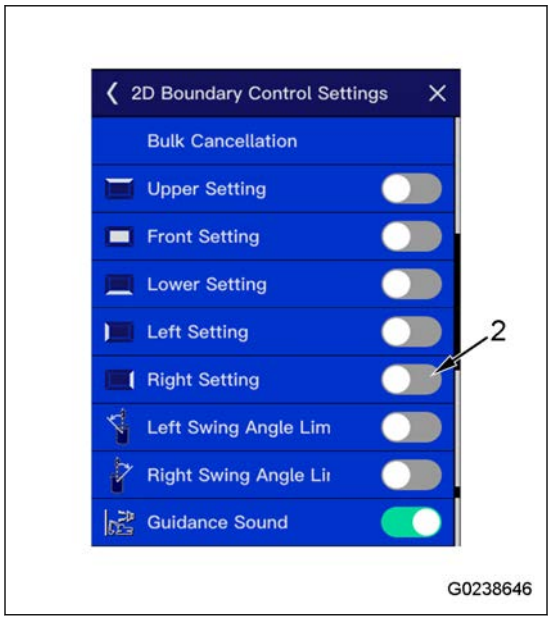

3. The first control point setting screen of the right wall is shown.

   When you tap the checkmark button (3), the end position (a) of the attachment cutting edge is set as the reference for the first point.

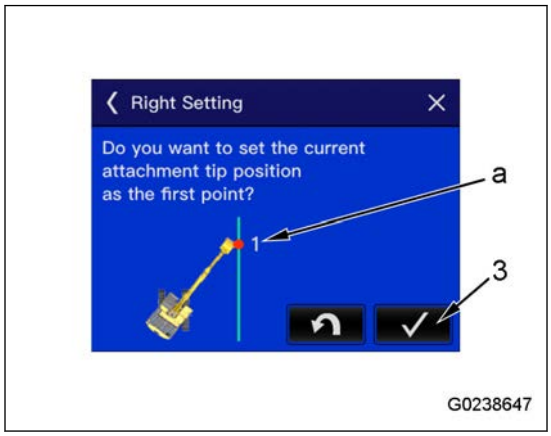

4. The second control point setting screen of the right wall is shown.

   Move the end (1) of the attachment cutting edge from the position where you set the first point to the position where you want to set the second point.

   When you tap the checkmark button (4), the end position (b) of the attachment cutting edge is set as the reference for the second point.

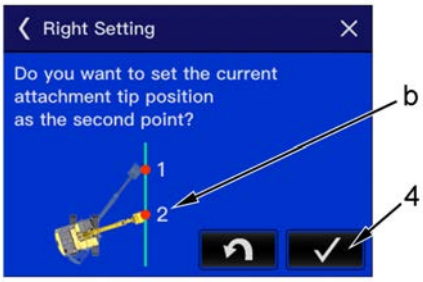

G0238648

5. When the settings are applied, “Settings changed.” is shown.

   When you tap the checkmark button (5), the screen goes back to “2D Boundary Control Settings” screen.

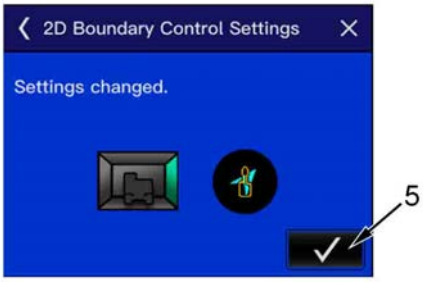

G0260677

How to Set 2D Boundary Control (Left Swing Angle Limit, Right Swing Angle Limit)

Left swing angle limit and right swing angle limit are functions to limit the swing angle of the upper structure.

The left swing angle limit setting and right swing angle limit setting of the 2D boundary control are set based on the swing position of the upper structure.

1. Swing the upper structure to the angle you want to set for the left swing angle limit setting or right swing angle limit setting.
2. When you tap “Left Swing Angle Limit” toggle switch (1) at the position where you want to set the left swing angle limit, the ON/OFF of “Left Swing Angle Limit” changes.

   When you tap “Right Swing Angle Limit” toggle switch (2) at the position where you want to set the left swing angle limit, the ON/OFF of “Right Swing Angle Limit” changes.

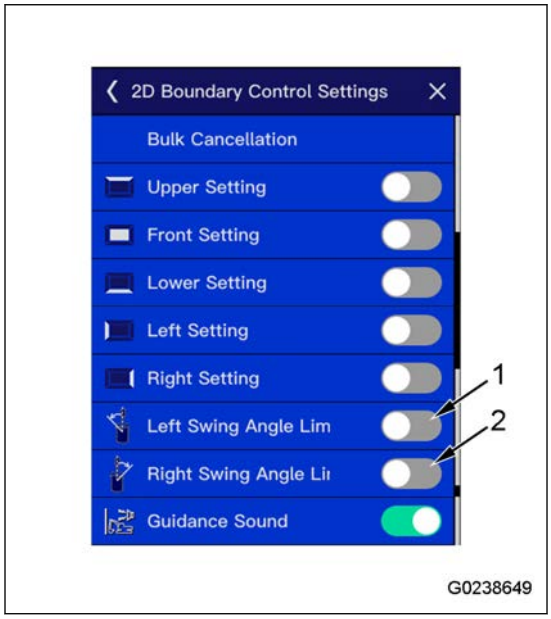

REMARK

When swing angle limits are set, swing angle limit display lines (which shows the set swing angle) are shown at the positions where the work equipment points.

(a): Display when only 1 direction is set

(b): Display when 2 directions are set

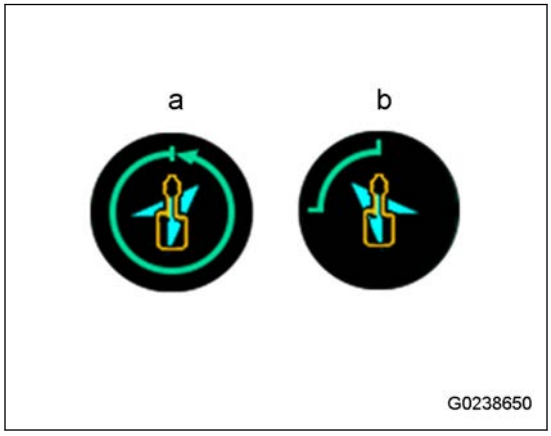

3. When the settings are applied, “Settings changed.” is shown.

   When you tap the checkmark button (3), the screen goes back to “2D Boundary Control Settings” screen.

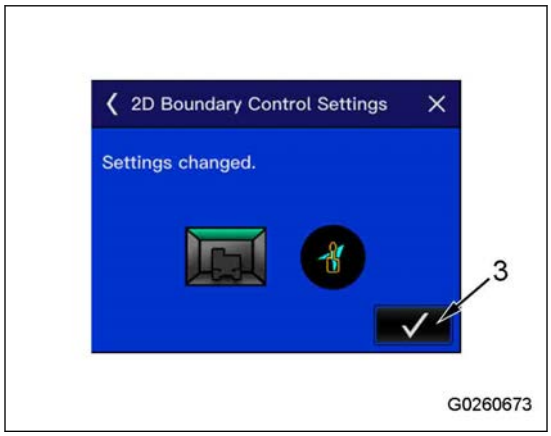

How to Disable 2D Boundary Control

You can cancel the setting of the 2D boundary control as follows.

1. When you tap the toggle switch (1) of the function to be cancelled, the ON/OFF of the function to be cancelled changes.

G0238651

If you want to cancel all the functions of the 2D boundary control at the same time, tap “Bulk Cancellation” button (2). All the functions of the 2D boundary control go OFF.

REMARK

Even if you tap “Bulk Cancellation” button (2), “Guidance Sound Setting” is not canceled.

G0238652

2. When the settings are applied, “Settings changed.” is shown.

   When you tap the checkmark button (3), the screen goes back to “2D Boundary Control Settings” screen.

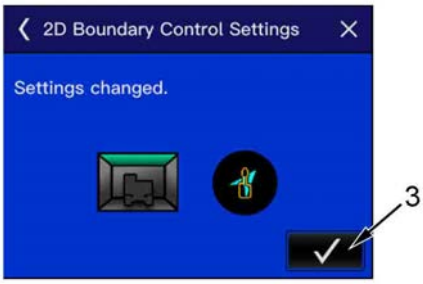

G0260673

Cab Interference Prevention

(If equipped)

⚠ WARNING

- **Cab interference prevention is a prevention system in case of emergency. If you rely on this system too much, it can be dangerous. Be careful not to let the work equipment go too near when you operate the machine.**
- **The operator is responsible for the safe operation of the machine.**
- **The operator must operate the machine safely in accordance with all the safety rules and regulations.**
- **The operator must be careful of the condition of the machine at all times.**
- **Operate the machine visually. Use the monitor screen as an aid for the operation.**
- **If you rely too much on the cab interference prevention during the operation, it can cause an accident (such as a collision), personal injury, or death. While you operate the machine, do not rely too much on the cab interference prevention.**
- **Do not use the cab interference prevention to stop the machine without the usual stopping operation.**
- **If the machine cannot decelerate or stop in time because of conditions (inclination, ground stability, weight of load/attachment), it possibly decelerates suddenly.**
- **Even if the operator moves the work equipment to avoid the danger, the machine does not operate as desired in some cases. Be very careful when you do the work.**
- **When you use the cab interference prevention, read “How to Set Cab Interference Prevention (3-393)” and make sure that the cab interference prevention is “ON”.**
- **If the cab interference prevention is “OFF”, the machine control is not done. Before you start the work, make sure that cab interference prevention is “ON”.**
- **When you replace the attachment, do the monitor setting and adjustment correctly in response to the attachment. The cab interference prevention does not operate correctly in some cases.**
- **Do the warm-up operation fully before the work, and make sure that the cab interference prevention operates correctly.**
  Even if the work equipment stops, do the operation checks again and again, and if the machine goes back to the correct state, it is not a problem.

⚠ CAUTION

Do not use the cab interference prevention when you install an attachment with movable parts, such as a slide arm, because some of these cannot stop at the interference prevention wall.

When cab interference prevention comes near the wall preset at the front of the cab (hereinafter referred to as the interference prevention wall), it does the control that follows.

- Decelerate and stop the work equipment operation to prevent contact with the interference prevention wall.
- When the work equipment stops near the interference prevention wall, the monitor display and buzzer operate to give a warning to the operator.

Function of Cab Interference Prevention

WARNING

- **It is not easy to hear the buzzer sound in some conditions around the machine.**
- **If a buzzer other than the cab interference prevention operates, the alarm when the machine goes near the interference prevention wall possibly does not operate.**
- **Use the cab interference prevention as an aid. Make sure of the safety around the machine visually when you work.**

CAUTION

If cab interference prevention is activated when you release the remained pressure in the hydraulic circuit, the remained pressure cannot be released in some cases.
While the remained pressure is released, disable cab interference prevention. At this time, be careful not to interfere with the cab and work equipment.

The cab interference prevention prevents interference between the cab and work equipment, and automatically stops the work equipment at a specified distance from the cab.

In the cab interference prevention, when the machine goes near the interference prevention wall, the icon on the monitor is shown in red or yellow, and the in-cab buzzer operates.

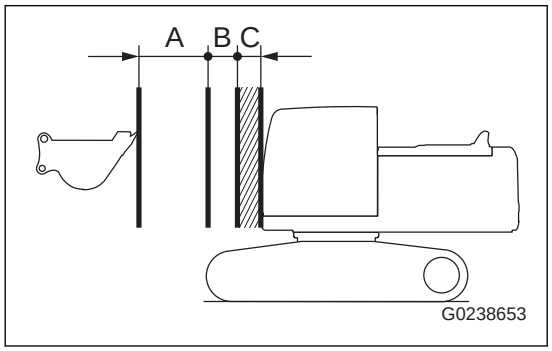

Relation with interference prevention wall	Icon	In-cab buzzer
In the emergency stop area	Red	One long beep (Continuous alarm)
In the automatic stop area	Yellow	Beep and beep (Fast)
In the automatic deceleration area	Yellow	-

Operation of Cab Interference Prevention

Automatic deceleration area

If the attachment goes into the automatic deceleration area (A) while the work equipment is operated to come near the operator seat, the work equipment speed is lowered. With this function, the soil does not spill off when the work equipment is stopped.

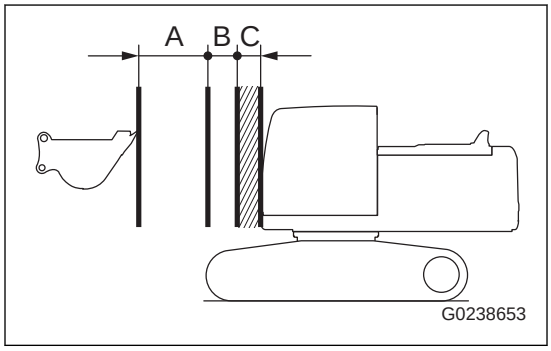

REMARK

In the automatic deceleration area, the deceleration start position is different for each attachment.

Automatic stop area

If you operate to furthermore move the work equipment near the operator seat from the automatic deceleration area (A), and the bucket goes near the range of the automatic stop area (B), the work equipment stops automatically, and the alarm buzzer beeps continuously (fast).

Emergency stop area

If the work equipment does not stop automatically in the range of the automatic stop area (B) for an unknown cause, the operation of the work equipment (boom, arm, bucket) stops in the range of the emergency stop area (C).

At this time, the alarm buzzer operates continuously, and red icons for the emergency stop caution lamp and cab interference prevention are shown on the machine monitor.

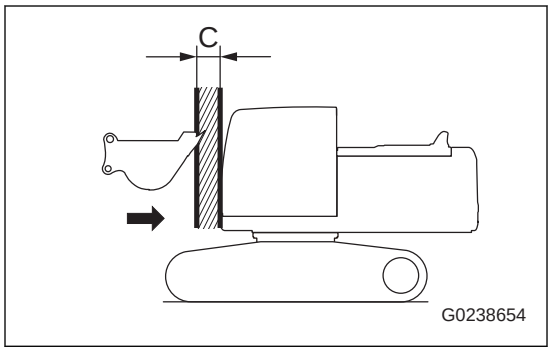

If you move the work equipment away from the cab while you push the temporary control cancel switch, the emergency stop is cancelled and the operation can be done.

Monitor Display of Cab Interference Prevention

CAUTION

The automatic stop and emergency stop areas are where there is a danger that the cab will interfere with the work equipment.
If the icon is shown in yellow or red, do not do the sudden operation.

The cab interference prevention display (1) shows 4 color levels for each state of the cab interference prevention.

Color of icon	Function status
Red	ON Stopped in the emergency stop area or Abnormality or malfunction
Yellow	ON Stopped in the automatic stop area or During deceleration in the range of the automatic deceleration area
Green	ON
Gray	OFF Temporary control cancel in operation
No	No function

G0238622

G0238656

How to Temporarily Disable Control of Cab Interference Prevention

CAUTION

If you push the temporary control cancel switch (1) with the lever activated while the stop control operates, the work equipment moves suddenly.
Set the lever to the neutral position, and push the temporary control cancel switch (1).

While the temporary control cancel switch (1) on the L.H. work equipment control lever is pushed, the control to the machine is disabled, and the machine operates as operated by the operator.

Work while you make sure of the safety in front of the cab.

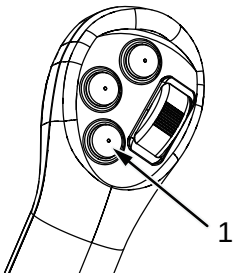

G0214418

How to Set Cab Interference Prevention

You can change the ON/OFF of cab interference prevention.

The settings are stored for each operator ID. The same settings are taken over the next time the same operator logs on.

1. You can set the ON/OFF of the cab interference prevention on “Machine Setting” screen of the user menu.

   Tap the menu icon to show “Machine Setting” screen in the user menu.

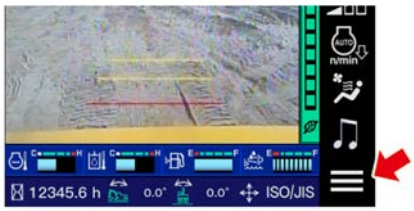

G0209111

2. When you tap “Cab interference prevention” toggle switch (1), the ON/OFF of cab interference prevention changes.

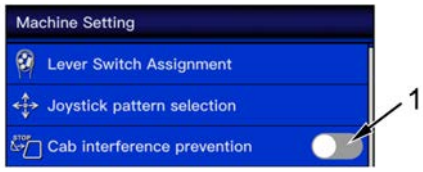

G0238657

Swing to Angle

(If equipped)

⚠ WARNING

- **The operator is responsible for the safe operation of the machine.**
- **“Swing to angle” is not designed to prevent operator carelessness such as inattentive operation or distraction.**
- **The operator must operate the machine safely in accordance with all the safety rules and regulations.**
- **The operator must be careful of the condition of the machine at all times.**
- **Operate the machine visually. Use the monitor screen as an aid for the operation.**
- **If you rely too much on “swing to angle” during operation, it can cause an accident (such as a collision), personal injury, or death. While you operate the machine, do not rely too much on “swing to angle”.**
- **Do not use “swing to angle” to stop the machine without the usual stopping operation.**
- **If the machine cannot decelerate or stop in time because of conditions (inclination, ground stability, weight of load/attachment), it possibly decelerates suddenly.**
- **Even if the operator moves the work equipment to avoid the danger, the machine does not operate as desired in some cases. Be very careful when you do the work.**
- **When you use “swing to angle”, read “How to Set “Swing to Angle” (3-400)” and make sure that “swing to angle” is “ON”.**
- **If the undercarriage moves unexpectedly, there is a risk of collision because of a change in the relative position with obstacles.**

⚠ CAUTION

When “swing to angle” is set only on one side, the left (right) swing position setting restricts only the left (right) swing.
Accordingly, if the machine turns to the right (left) while only the left (right) swing position is set, the deceleration and stop control is not done.

“Swing to angle” is a function to slow down and temporarily stop the swing operation when the swing angle comes near the value preset by the operator, and to help the operation of the work equipment at the desired swing angle.

In addition, when the lever is set to the neutral position near the set swing angle, the function can be canceled temporarily.

Monitor Display of “Swing to Angle”

“Swing to angle” display

“Swing to angle” display is shown by “right swing to angle” display (1) and “left swing to angle” display (2).

The direction of the arrow icon shows the direction of the angle that is restricted.

The circle (3) in the figure shows the set swing angle position of “swing to angle”.

The limit range of “swing to angle” is shown by “swing to angle” display on the circumference of the circle.

When the temporary control cancel switch is activated or the travel operation is sensed while “swing to angle” is temporarily cancelled, the control is disabled and the icon goes off.

G0238624

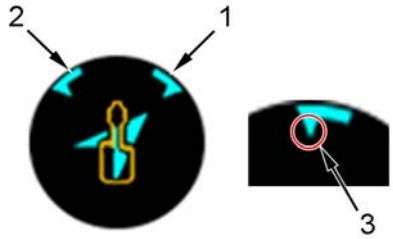

G0238659

Prohibited Operations When You Use “Swing to Angle”

Prohibition of Function During Lifting Work

Do not use “swing to angle” while the lifting work is done on the work equipment.

If “swing to angle” decelerates or stops, there is a danger that the lifted load causes damage to the structure around the machine, or it causes serious personal injury or death.

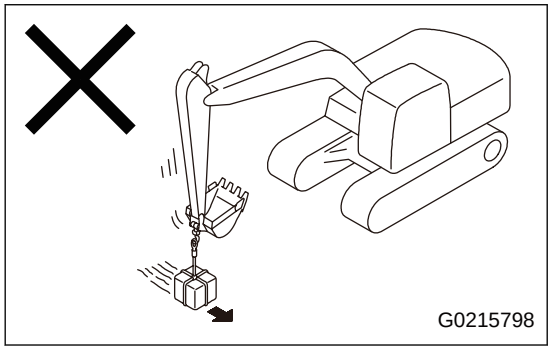

Prohibition of Function During Demolition Work

Do not use “swing to angle” while the demolition work is done on the work equipment.

If “swing to angle” decelerates or stops, there is a danger that the demolished structure collapses, the structure around it has damage, and serious personal injury or death can occur.

NOTICE

In addition to the above, operations that can cause serious personal injury or death are prohibited.
For details, see “Prohibited Operations (2-37)”.

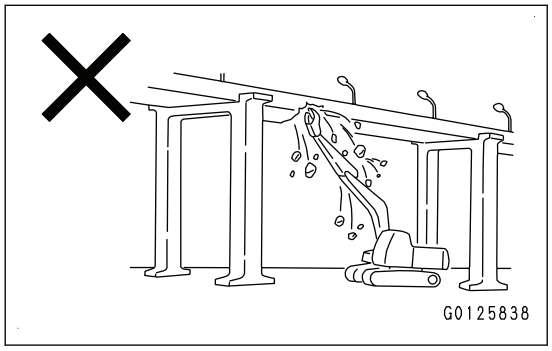

Precautions When You Use “Swing to Angle”

When There is Possibility That Machine Becomes Unstable Because of Sudden Stop

The machine stop control of “swing to angle” is activated, and the machine can stop suddenly.

Examples of works where sudden stops can let the machine lose stability are shown below.

Be sure of the safety around you before you operate the machine.

For the procedure to set the machine stop control to OFF, see “How to Set “Swing to Angle” (3-400)”.

- When you do the work on a steep slope
- When you do the work on a slippery road
- When you do the work on soft ground where there is a danger of landslide

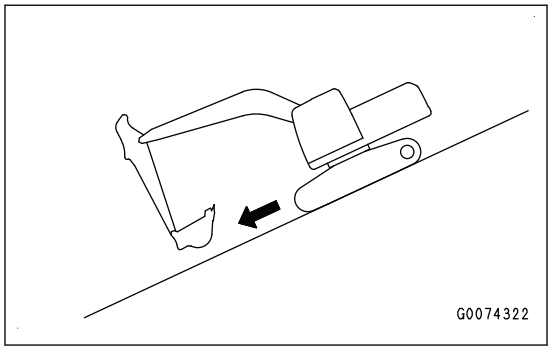

- Make a swing operation on a slope

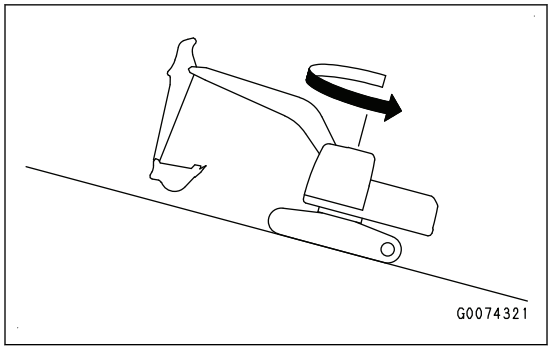

- When you do the work on a rough road

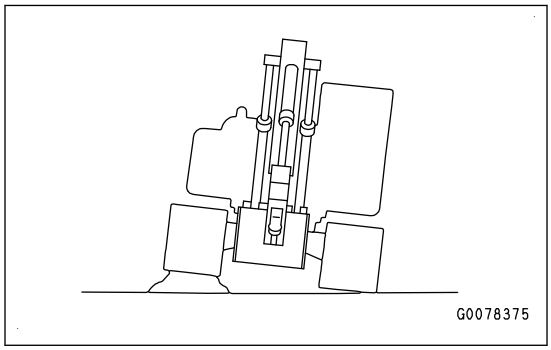

When There is Possibility That You Cannot Evacuate Machine Because of Machine Stop Control

If the machine stop control of “swing to angle” is activated, the escape operation in an emergency can be temporarily restricted.

The works that follow are examples where the operation of the machine stop control can temporarily restrict the escape operation in an emergency.

Be sure of the safety around you before you operate the machine.

For the procedure to set the machine stop control to OFF, see “How to Set “Swing to Angle” (3-400)”.

- Work under a cliff

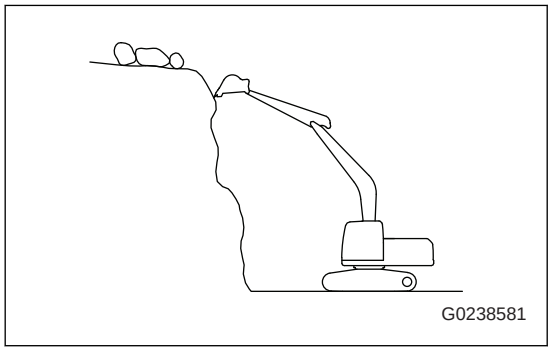

- Work near a cliff or road edge

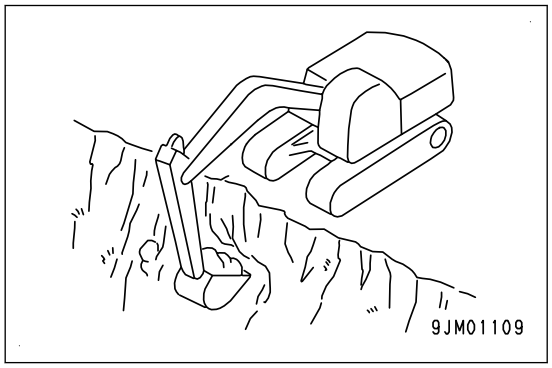

- Work on a structure such as a building

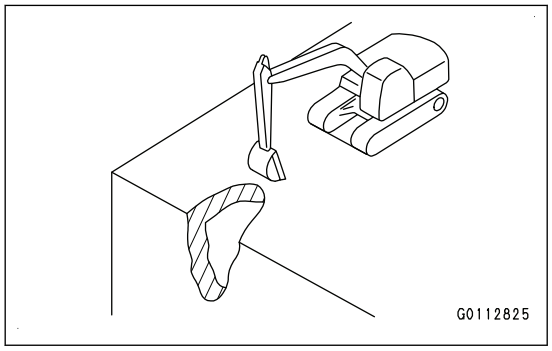

“Swing to Angle” for Travel

⚠ CAUTION

When the machine travels, the limit angle range set by “swing to angle” moves based on the center of the machine. After the travel is completed, examine the setting to make sure that the limit angle range is correct.

When you start the travel while “swing to angle” is ON, “swing to angle” becomes disabled. A pop-up (A) is shown on the machine monitor at this time.

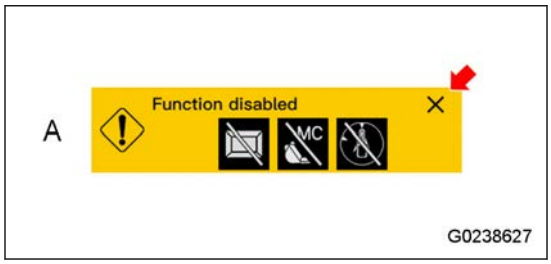

In addition, 10 seconds or more after the machine starts to travel, “swing to angle” goes OFF. A pop-up (B) is shown on the machine monitor at this time.

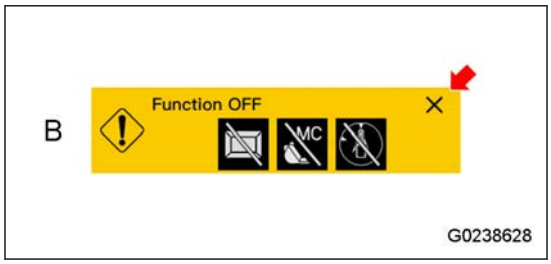

REMARK

If the travel time is less than 10 seconds, the setting of “swing to angle” is saved. After the travel is completed, “swing to angle” will be ON.
If the travel time is 10 seconds or more, the setting of “swing to angle” is deleted. After the travel is completed, “swing to angle” will be OFF.
When you tap the CLOSE button, the pop-ups (A) and (B) are hidden. Even in this case, the function stays disabled or OFF during the travel.

How to Temporarily Disable Control of “Swing to Angle”

⚠ CAUTION

If you push the temporary control cancel switch (1) with the lever activated while the stop control operates, the work equipment moves suddenly.
Set the lever to the neutral position, and push the temporary control cancel switch (1).

There are 2 methods to disable the control of “swing to angle” temporarily, as follows.

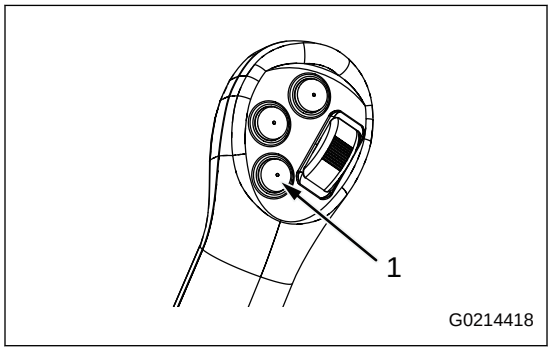

1. Operate the temporary control cancel switch.

   While the temporary control cancel switch (1) on the L.H. work equipment control lever is pushed, the control to the machine is disabled, and the machine operates as operated by the operator.

2. Operate the lever to the neutral position.
   If the lever is set to the neutral position when the machine is near the set swing angle (10° or less away), the control intervention to the machine is disabled. The machine operates as the operator's control.
   When you turn the machine to the right or left approximately 10° from the set swing angle, the machine temporarily goes back to the normal state from the disabled state.

Secure the safety around the machine when you operate it.

How to Set “Swing to Angle”

You can change the angle setting of “swing to angle”.

“Left swing to angle” and “Right swing to angle” of “swing to angle” are set based on the swing position of the upper structure.

1. Tap the bird's eye view icon (1) to show “Feature selection” screen.
2. Swing the upper structure to the desired angle set in “left swing to angle” or “right swing to angle”.

G0238660

3. When you tap “Left Swing to Angle” toggle switch (2) on “Feature selection” screen at the position where you want to set “left swing to angle”, the ON/OFF of “Left Swing to Angle” changes.

   When you tap “Right Swing to Angle” toggle switch (3) at the position where you want to set “right swing to angle”, the ON/OFF of “Right Swing to Angle” changes.

G0238661

REMARK

When you set “swing to angle”, “swing to angle” display is shown at the position where the work equipment points.

(a): Display when only 1 direction is set

(b): Display when 2 directions are set

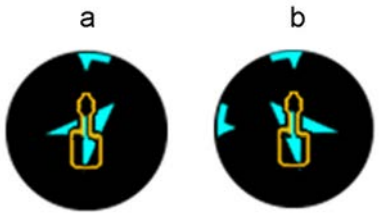

G0238662

2D Machine Control

(When installed)

⚠ WARNING

- **Before you move the machine for a loading operation or calibration, be sure of the safety around the machine.**
- **Do not move the machine while you operate the monitor.**
  When you operate the monitor, stop the machine and set the lock lever to the LOCK position.
- **When you operate the machine, do not look only at the monitor. Be sure to look around the machine and operate it.**

2D machine control is a function that allows construction with ICT (information communication technology) on the machine monitor.

Also, when the semi-auto mode is used, the work equipment is automatically controlled to prevent over-digging based on the set design surface.

Use this function mainly for the operations that follow.

- Digging work
- Ditching work
- Loading work
- Leveling work

For details of the work procedure, see “Explanation of Function of Semi-Auto Mode (3-423)”.

How to Use 2D Machine Control

Before you use the 2D machine control, reset the stroke of the bucket cylinder and set the attachment correctly.

For how to reset the stroke of the bucket cylinder, see “Cylinder Function State Caution Lamp (3-33)”.

For the attachment setting, see “Attachment Setting (3-300)”.

REMARK

If the 3D machine control is used on the ICT monitor, the 2D machine control is not available.
If you use the 3D machine control, see the 3D Machine Control Operation and Maintenance Manual.
If it is used together with the cab interference prevention or 2D boundary control, priority is given to the cab interference prevention or 2D boundary control.

NOTICE

- **Only one design surface (A) can be set with the 2D machine control. The design surface does not end at the top of slope (B), toe of slope (C), or in the right and left directions (D).**

- **Even if the direction of the upper structure changes by swings, the position of the design surface (A) does not move.**

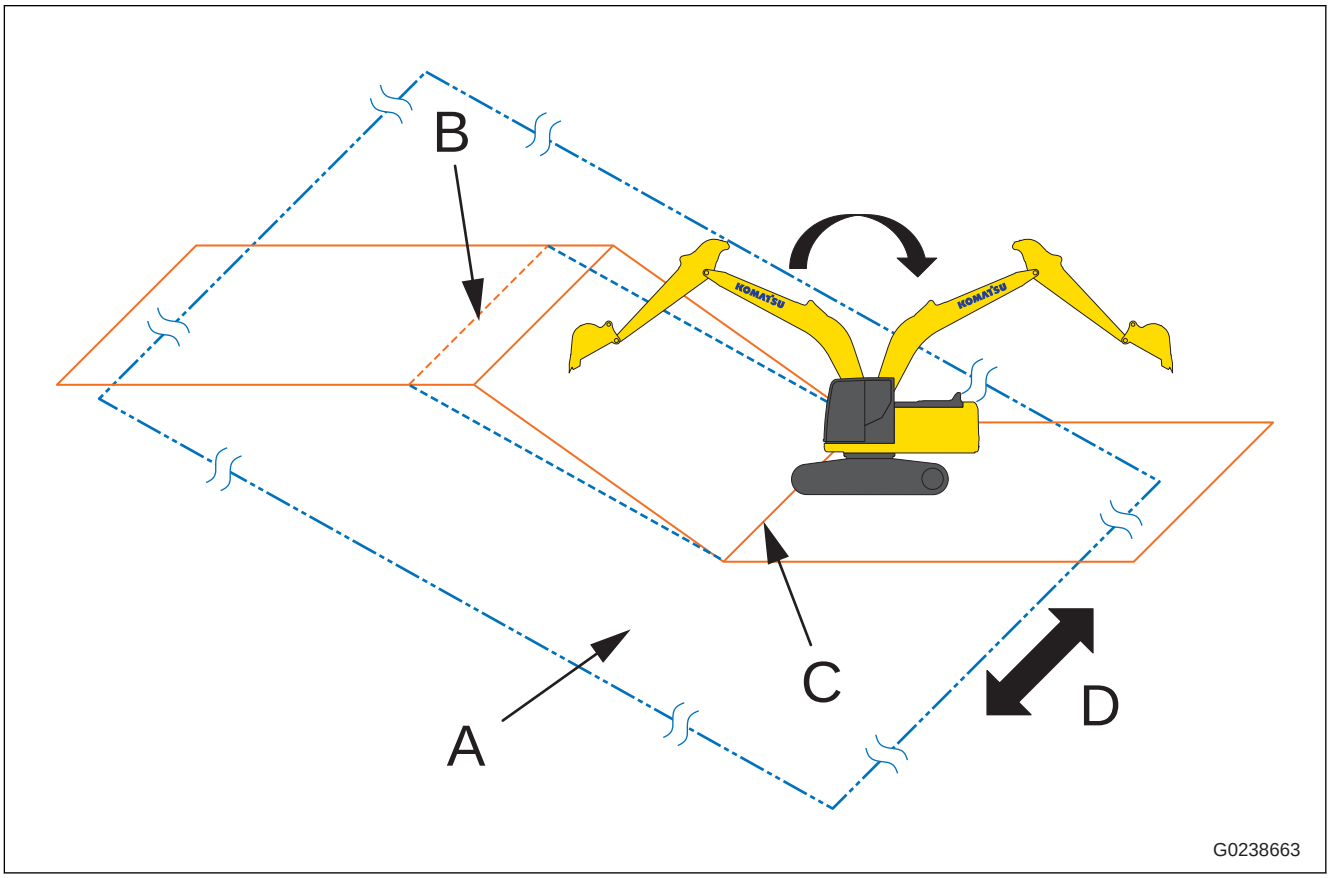

- **If the machine travels after the design surface is set, the design surface also moves. After the machine travels, set the design surface again.**
- **When you use the touchpoint, you can keep the design surface before and after the travel. For the touchpoint, see “Touchpoint (3-408)”.**
- **If the 2D machine control is used for a long time, the set wall can be moved by the influence of the operating environment on the sensor. If this phenomenon occurs, set the design surface again.**
  For the setting of the design surface, see “Target Design Surface (3-407)”.

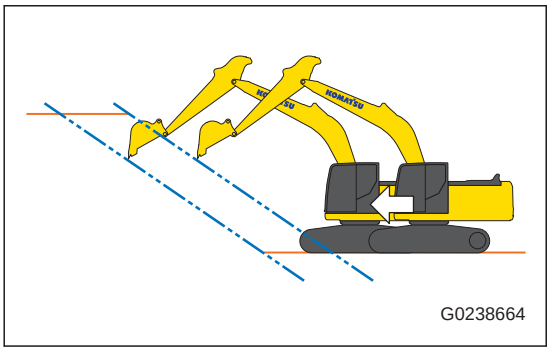

Display of Machine Monitor

The displays on the machine monitor related to the 2D machine control are as follows.

When only the 2D machine control is used

(1) 2D machine control/payload meter selector icon

(2) 2D machine control bar

(3) Manual/semi-auto selector bar

(4) Light bar

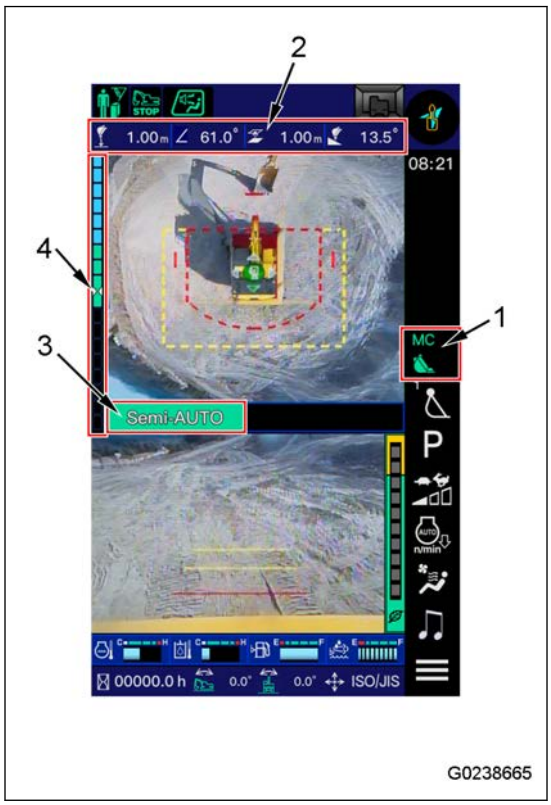

When you use the 2D machine control and payload meter function together

(1) 2D machine control/payload meter selector icon

(2) Payload meter bar

(3) Manual/semi-auto selector bar

(4) Light bar

(5) 2D machine control bar

REMARK

When payload meter setting screen or machine control setting screen is shown, 2D machine control bar (5) is not shown.

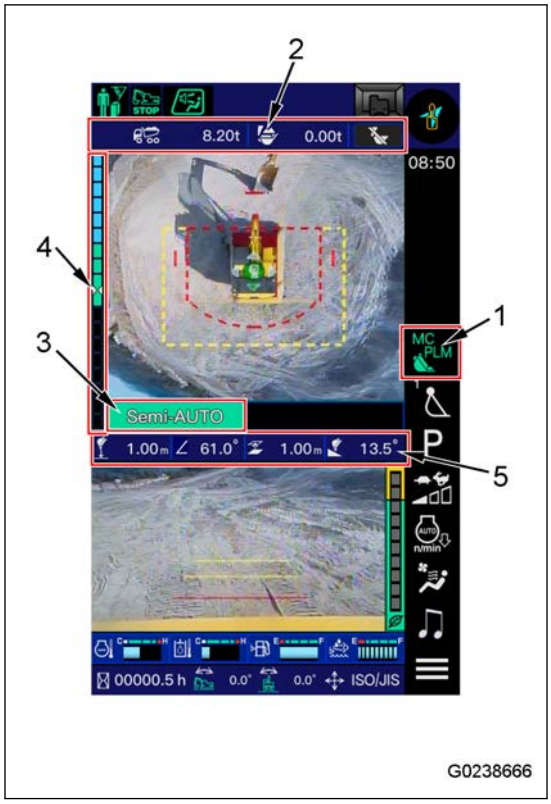

(1) 2D machine control/payload meter selector icon is shown as follows. The state changes each time the icon is tapped.

(a) 2D machine control/payload meter is disabled.

(b) 2D machine control is enabled.

(c) Payload meter is enabled.

(d) 2D machine control/payload meter is enabled.

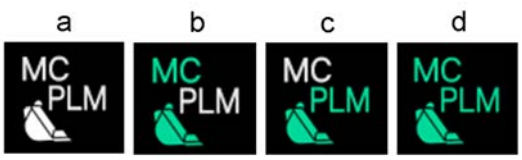

G0238566

REMARK

When the 3D machine control is used, the 2D machine control/payload meter selector icon is hidden.
When the payload meter function is used on the ICT monitor, the 2D machine control/payload meter selector icon does not change to (c) or (d).

(2) For details of the payload meter bar, see “When You Use Payload Meter Function on Machine Monitor (3-435)”.

(3) The display content of the manual/semi-auto selector bar is as follows.

(e) Manual state

(f) Semi-auto standby state

(g) Semi-auto activation state

Also, the currently enabled machine control is shown on the manual/semi-auto selector bar.

G0258371

The icons for each function are as follows.

Function	Function disabled	Function enabled	Function activated
Attachment angle hold control	Not shown	G0241199	G0241200
Auto boom down	Not shown	G0241201	G0241202
Compaction control	Not shown	G0241203	G0241204
2D laser (if equipped)	Not shown	G0261374	G0261375

For details of the machine control function, see “Explanation of Function of Semi-Auto Mode (3-423)”.

(4) The light bar visually shows the distance from the blade edge to the design surface.

(h) Distance of 3 times from “Target Surface Tolerance” (upward)

(i) Distance from “Target Surface Tolerance” (upward)

(j) Distance of 1/3 of “Target Surface Tolerance” (upward)

(k) Distance of 1/3 of “Target Surface Tolerance” (downward)

(l) Distance from “Target Surface Tolerance” (downward)

(m) Distance of 7/3 from “Target Surface Tolerance” (downward)

(n) Distance of 3 times from “Target Surface Tolerance” (downward)

The range (i) to (l) shown by the green gauge is the tolerance set by “Target Surface Tolerance”.

The lighting conditions of the upper limit, lower limit, blue gauge, and red gauge are automatically set based on the setting of “Target Surface Tolerance”.

- Upper limit: (h)
- Lower limit: (n)

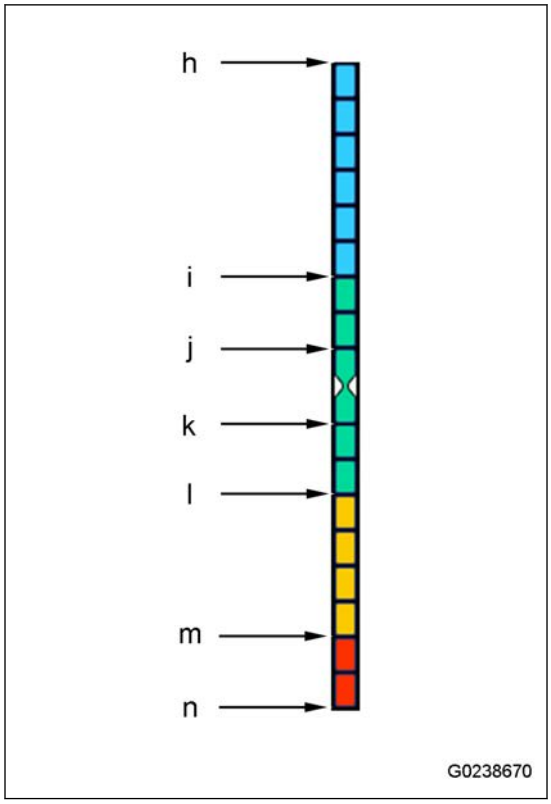

REMARK

When the benchmark setting is OFF, the gauge color will be grayed out.

(5) The display content of the 2D machine control bar is as follows.

(o) The distance from the blade edge to the design surface

Shows the distance between the design surface and blade edge.

- When the design surface is not set: “---”
- When it is in the target construction surface tolerance: Shown in green
- During digging more than target construction surface tolerance: Shown in red

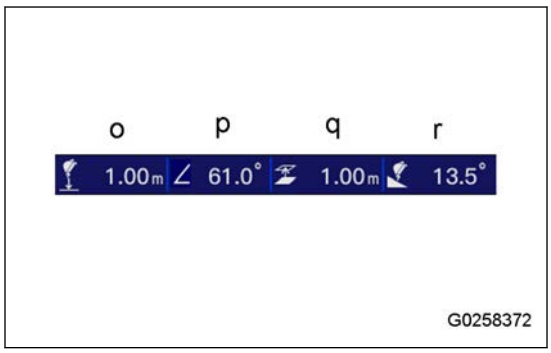

(p) Attachment angle

Shows the attachment angle relative to the ground plane.

(q) Height adjustment value

Shows the target height of the set design surface (when the design surface is not set, “ ---”).

There are 2 adjustment methods as follows.

- Push the offset up/down switch allocated by lever switch assignment to adjust to “Elevation Adjustment Range Setting” set on the setting screen.
- Tap the display of the height adjustment value to input the numeric value manually.

(r) Pitch angle setting value

Shows the set value of the pitch angle (when the design surface is not set, “---”).

Machine Control Setting

When you tap the 2D machine control bar, “Machine Control Setting” screen is shown, and you can set and see the contents that follow.

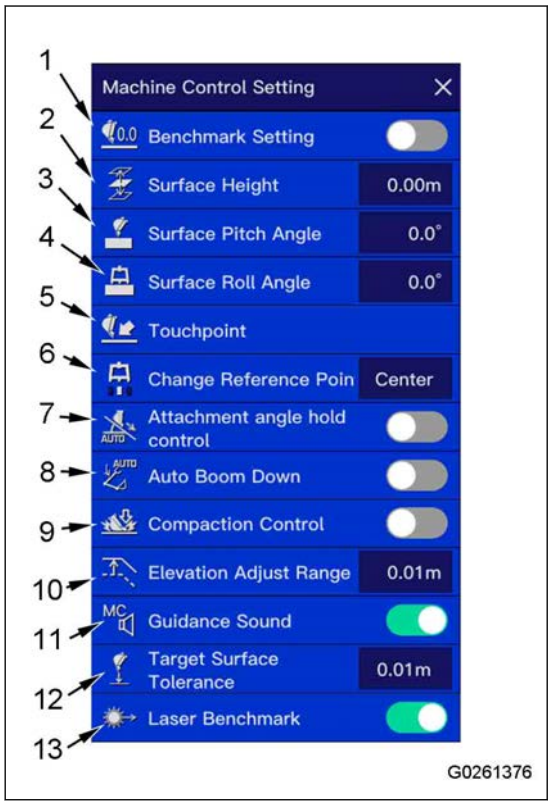

(1) “Benchmark Setting”

Change ON/OFF of the benchmark setting.

When it is set to ON, you can set the design surface.

(2) “Surface Height”

You can set the design surface height.

(3) “Surface Pitch Angle”

You can set the design surface pitch angle.

(4) “Surface Roll Angle”

You can set the design surface roll angle.

(5) “Touchpoint”

Use it when you want to keep the design surface before and after the travel.

(6) “Change Reference Point”

You can change the reference point of the blade edge.

(7) “Attachment angle hold control”

Change enabled/disabled of the attachment angle hold control function.

(8) “Auto Boom Down”

Change enabled/disabled of the auto boom lower control function.

(9) “Compaction Control”

Change enabled/disabled of the compaction control function.

(10) “Elevation Adjust Range”

You can set the width to adjust the elevation adjustment value.

(11) “Guidance Sound”

Change ON/OFF of the guidance sound.

(12) “Target Surface Tolerance”

You can set the target construction surface tolerance (allowable error).

(13)“Laser Benchmark”

(if equipped)

Changes ON/OFF of the benchmark setting for the 2D laser. When it is set to ON, you can set the design surface using the laser level and laser catcher.

REMARK

While the semi-auto mode is in operation, all the items in “Machine Control Setting” are grayed out, and the settings cannot be changed.

Target Design Surface

1. Tap “Benchmark Setting” toggle switch to set it to ON.

   The reference point of the blade edge at this time becomes the control point.

   REMARK

   If “Benchmark Setting” is allocated to a lever switch, you can change ON/OFF with the applicable lever switch.

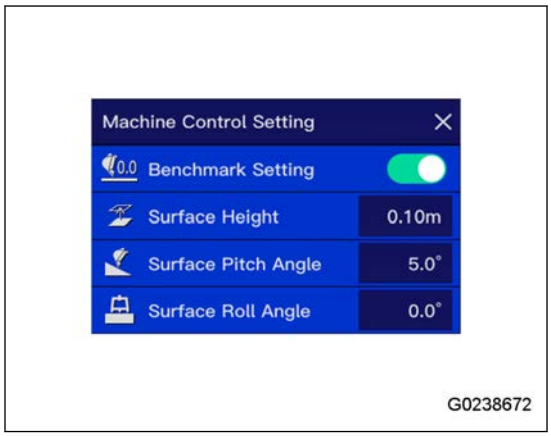

2. Tap “Surface Height” to input the desired numeric value.

   The icon changes in response to the input value.

   (a) It shows that the design surface is above the control point.

   (b) It shows that the design surface is at the height of the control point.

   (c) It shows that the design surface is below the control point.

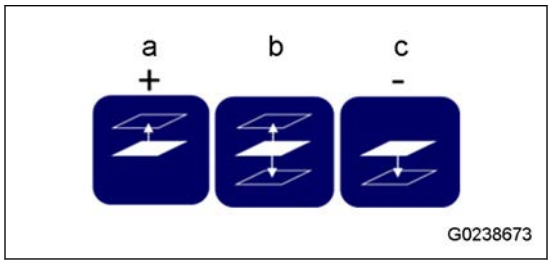

3. Tap “Surface Pitch Angle” to input the desired numeric value (inclination angle).

   The icon changes in response to the input value.

   (d) It shows that the design surface in the pitch direction is an upside slope.

   (e) It shows that the design surface in the pitch direction is horizontal.

   (f) It shows that the design surface in the pitch direction is a downside slope.

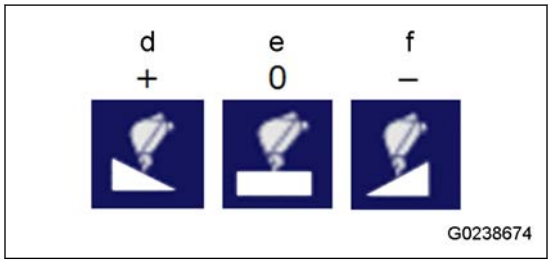

4. Tap “Surface Roll Angle” to input the desired numeric value (inclination angle).

   The icon changes in response to the input value.

   (g) It shows that the design surface in the roll direction is down to the right.

   (h) It shows that the design surface in the roll direction is horizontal.

   (i) It shows that the design surface in the roll direction is up to the right.

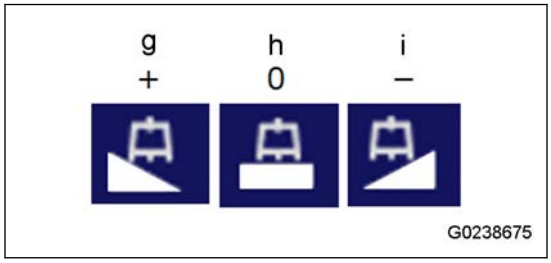

Touchpoint

Use touchpoint when you want to keep the original design surface before and after the machine travels.

1. Tap “Touchpoint” while “Benchmark Setting” is ON.

   REMARK

   If “Touchpoint” is allocated to a lever switch, you can enter with the applicable lever switch.

G0238676

2. Touch the reference point that you touch even after the movement with the attachment blade edge, and tap the checkmark button.

   REMARK

   Put the reference point in the area where you can touch it even after the movement.

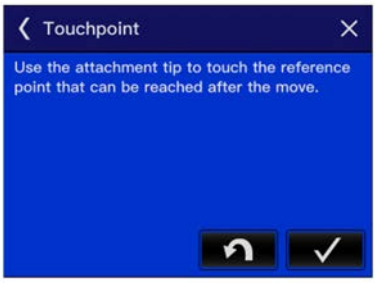

G0238677

3. After you move (travel) the machine, touch the same reference point with the attachment blade edge again, and tap the checkmark button.
4. The original design surface is kept.

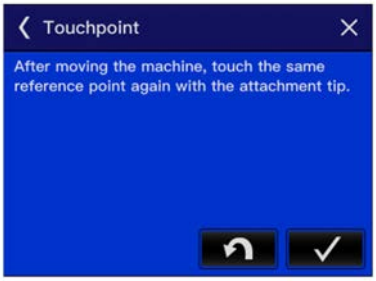

G0238678

REMARK

If a misalignment occurs, set the design surface again.

When you use the “Touchpoint” while “Benchmark Setting” is set to OFF, the screen that follows is shown. Use “Touchpoint” while “Benchmark Setting” is set to ON.
When the machine travels for 10 seconds or more, the “Benchmark Setting” is set to OFF. When the “Touchpoint” is used, the screen that follows is shown and the “Touchpoint” is disabled. For the behavior during travel, see “Machine Control Function During Travel (3-421)”.

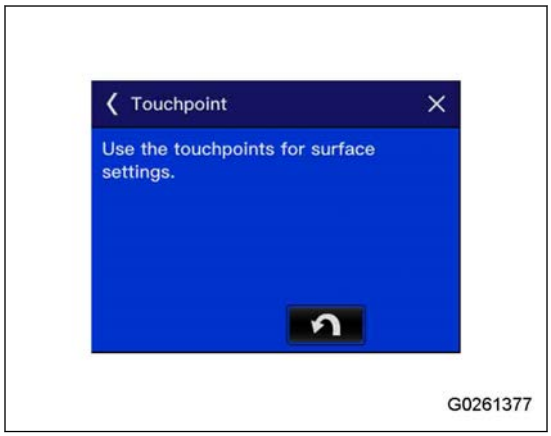

Change Reference Point

1. Tap “Change Reference Point”.

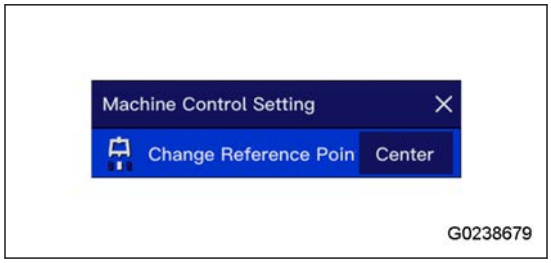

The screen below is shown.

2. Tap the desired icon (a), (b), or (c).
   (a) Do the machine control/guidance based on the left end of the attachment blade edge.
   (b) Do the machine control/guidance based on the middle position of the attachment blade edge.
   (c) Do the machine control/guidance based on the right end of the attachment blade edge.
3. Tap the checkmark button.
4. The reference point of the attachment blade edge changes.

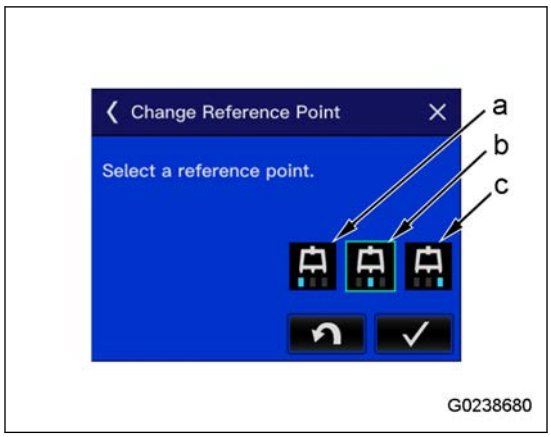

Attachment Angle Hold Control

Tap “Attachment angle hold control” toggle switch to set the function to ON.
At this time, the attachment angle hold control becomes available.

For details of this function, see “Semi-Auto Mode (3-413)”.

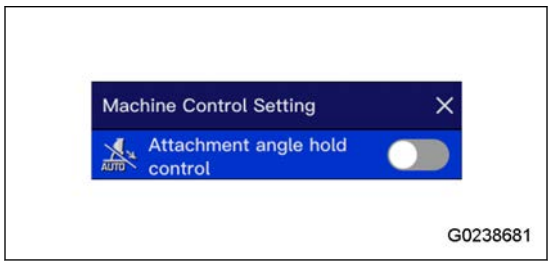

Auto Boom Down

Tap “Auto Boom Down” toggle switch to set the function to ON. At this time, the auto boom down becomes available.

For details of this function, see “Semi-Auto Mode (3-413)”.

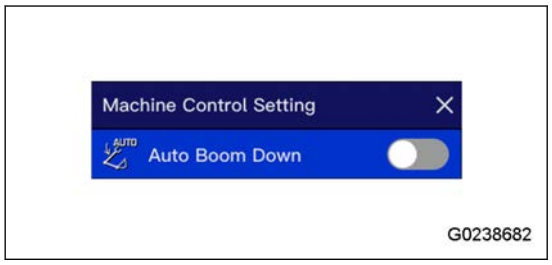

Compaction Control

Tap “Compaction Control” toggle switch to set the function to ON.
At this time, the compaction control becomes available.

For details of this function, see “Semi-Auto Mode (3-413)”.

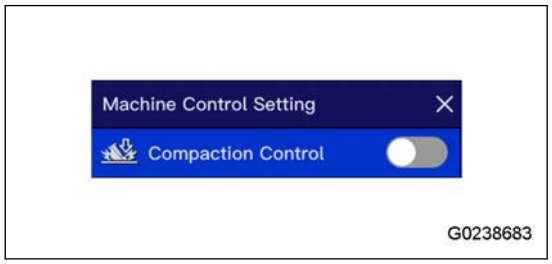

Elevation Adjust Range

1. Tap “Elevation Adjust Range”.
2. Input the desired number and tap the checkmark button.

   REMARK

   You can operate the offset up/down switch allocated by lever switch assignment to adjust to the set “Elevation Adjust Range”.

Guidance Sound

1. Tap “Guidance Sound”.
2. The ON/OFF of the guidance sound changes.

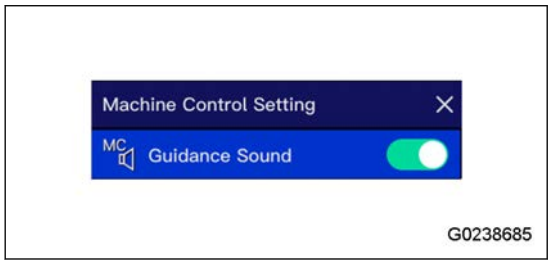

Target Surface Tolerance

1. Tap “Target Surface Tolerance”.
2. Input the desired number and tap the checkmark button.

   The target construction surface tolerance (allowable error) is updated.

   At the same time, the lighting conditions of the upper limit, lower limit, green gauge, blue gauge, and red gauge of the light bar on the standard screen are updated automatically.

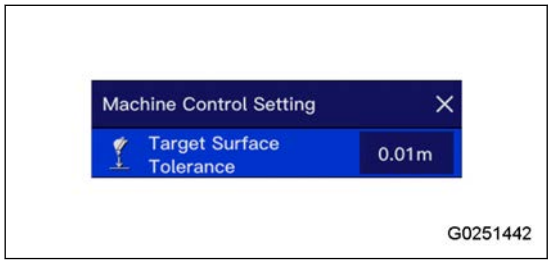

Laser Benchmark

(If equipped)

1. Move the machine so that the laser catcher (a) on the arm receives the laser from the laser level (b).

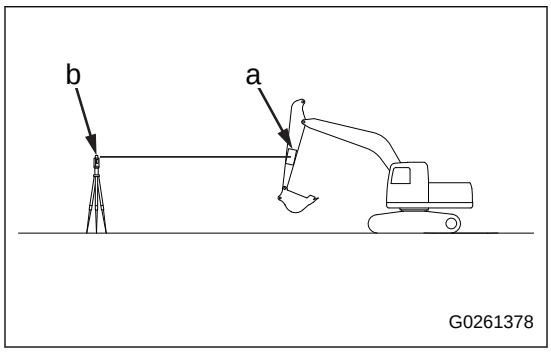

2. Tap the toggle switch of the “Laser Benchmark” to set the function to ON.

   At this time, the confirmation screen that follows is shown. Tap the checkmark button.

   If the laser catcher does not receive the laser, the screen below is shown. When the laser catcher receives the laser, the screen changes to the confirmation screen.

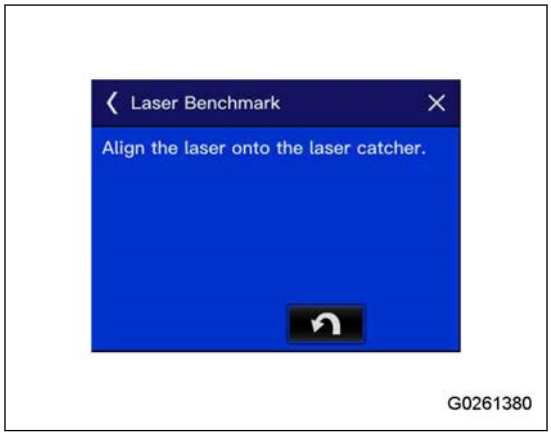

3. The function is activated, and the design surface is set based on the laser reception position.

   At this time, the 2D laser icon (c) is shown on the manual/semi-auto selector bar.

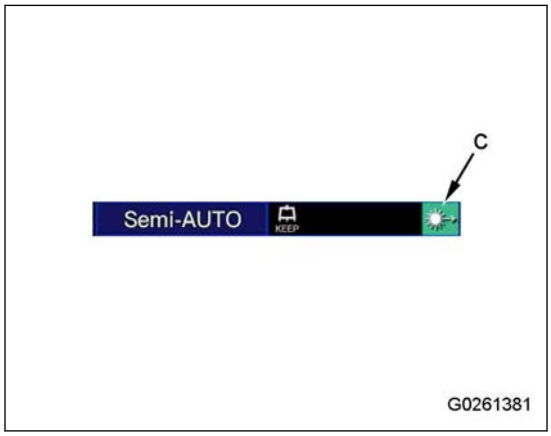

<Control mode icon>

(1): Function enabled

The laser is NOT received while the design surface is set.

(2): Function activated

The laser is received while the design surface is set.

You can update the design surface when the laser catcher receives the laser.

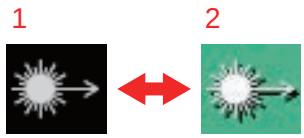

G0261382

REMARK

When you change the “Surface Height”, you can adjust the height of the design surface based on the laser reception position.
For the setting of Surface Height, see “Target Design Surface (3-407)”.

4. After the machine travels, make the laser catcher (a) receive the laser again. Then tap the 2D laser icon (c) on the manual/semi-auto selector bar. This action updates the design surface. The system keeps the same design surface as before the travel.

REMARK

If “Surface update(Laser)” is allocated to a lever switch, you can change ON/OFF with the applicable lever switch.
For the lever switch allocation, see “Lever Switch Assignment (3-58)”.

The design surface (e) is tilted based on the laser reception position (d) of the laser catcher in response to the “Surface Pitch Angle” and “Surface Roll Angle”. Accordingly, when you keep the inclined design surface before and after the movement, set the “Surface Pitch Angle” and “Surface Roll Angle” to the desired angle, and tilt the laser irradiated from the laser level (b). The “Surface Height” (h) is kept before and after the movement.

If the machine travels for 10 seconds or more, the “Laser Benchmark” is turned OFF. For the behavior during travel, see “Machine Control Function During Travel (3-421)”.

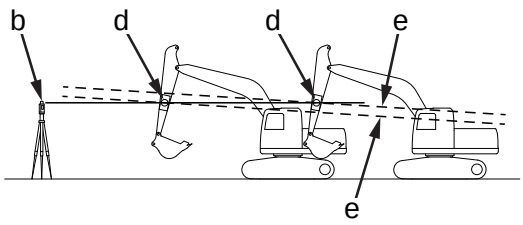

G0261383

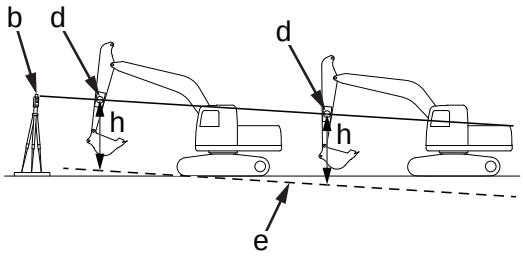

G0261384

Semi-Auto Mode

Precautions for Operation

⚠ WARNING

- **The semi-auto mode is the function to restrict the digging range automatically. With this function, even if the operator moves the work equipment to avoid the danger, the work equipment does not operate as desired in some cases. Be very careful when you do the work.**
  Do not use the semi-auto mode function to avoid danger. The operating state can become worse.
- **When the semi-automatic mode is activated, the work equipment stops automatically not to dig deeper than the design surface. Accordingly, when the machine is tilted, you cannot lower the bucket to the ground and hold the machine to avoid a danger. Obey the precautions for the operation, and operate the machine carefully and safely.**
- **The semi-auto mode is used to control the movement of the work equipment (boom, arm, bucket, attachment), and does not control the swing and travel operations.**
  But, if you swing the upper structure while you operate the work equipment, the semi-auto mode controls the operation. Operate the machine carefully.
  The semi-auto mode is set in the standby state and does not operate during travel.
- **If the machine monitor freezes, stop the work, lower the work equipment to the ground, set the lock lever to the LOCK position, and then start the machine monitor again.**
  To start the machine monitor again, turn the starting switch back to the OFF position, and wait until the machine monitor goes off. Then turn the starting switch to the ACC or ON position again.
- **If the work equipment does not operate correctly, let go of the work equipment lever, and set the lock lever to the LOCK position. The work equipment stops.**
- **Be sure to do the warm-up operation before you start the work. If the work equipment is operated without sufficient warming-up operation of the machine, there is a possibility that the response of the work equipment to the movement of the control lever becomes slow, the work equipment cannot respond as the operator desires, or the semi-auto mode control does not operate correctly. It is very dangerous.**
  In cold season in particular, do the warm-up operation sufficiently and make sure that the work equipment moves smoothly before you start the work.
- **Before you use the semi-automatic mode, be sure to examine the attachment settings and calibration. If the semi-automatic mode is used with the different attachment setting that is not applicable to the actual installed bucket, it is dangerous because it cannot respond as the operator desires.**
  For the attachment setting, see “Attachment Setting (3-300)”.
- **If an attachment other than the bucket such as a breaker is used, the precision of the construction is degraded compared when the bucket is used. The precision of the work changes largely in response to the conditions such as the material of the construction target. Before you start the construction, examine the precision by the trial operation, and do the work with sufficient space against the finishing surface.**

NOTICE

- **When the semi-auto mode is used, run the engine at high idle to keep the precision of control.**
- **If you do the work on hard soil or the bucket load is large, the precision of the construction can be degraded.**
- **The working precision can be degraded by the influence of the operating environment on the sensor.**
- **When you use the semi-auto mode, make sure that the working mode is set to P+, P, or E mode.**
- **The distance between the bucket edge and design surface is calculated, and the guidance is shown on the machine monitor. The guidance is not shown even if the bucket bottom exceeds the design surface.**
  In the semi-auto mode, this function controls not only the bucket edge but also the outline of the bucket not to dig deeper than the design surface.
- **If the machine stop control of the object avoidance is activated during the semi-auto mode, the system cannot be restored by the semi-auto mode control even if you do the restoration operation with the lock lever in the machine stop state. In such case, move the bucket away from the design surface and restore the object avoidance.**

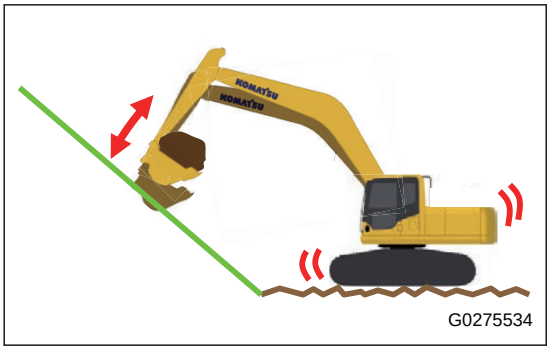

1. If the bucket edge is not set correctly, it can cause unexpected machine behavior.

   For the setting to select the bucket edge, see “Change Reference Point (3-409)”.

2. If the machine moves largely on a rough road, there is a danger that the machine digs deeper than the design surface with the bucket edge or bucket bottom. This is not a problem.
   If you want to do the finishing work accurately, operate the work equipment lever slowly.
   If the digging depth exceeds 500 mm {1 ft 8 in}, the mode changes from the semi-auto mode to the manual mode.
   When you operate the machine on a jobsite with buried pipes such as water pipes, gas pipes, or high-voltage pipes, make the surface with the space of 500 mm {1 ft 8 in} or more from them. It will reduce the danger to cause damage to the buried pipes, and the work can be done easily.

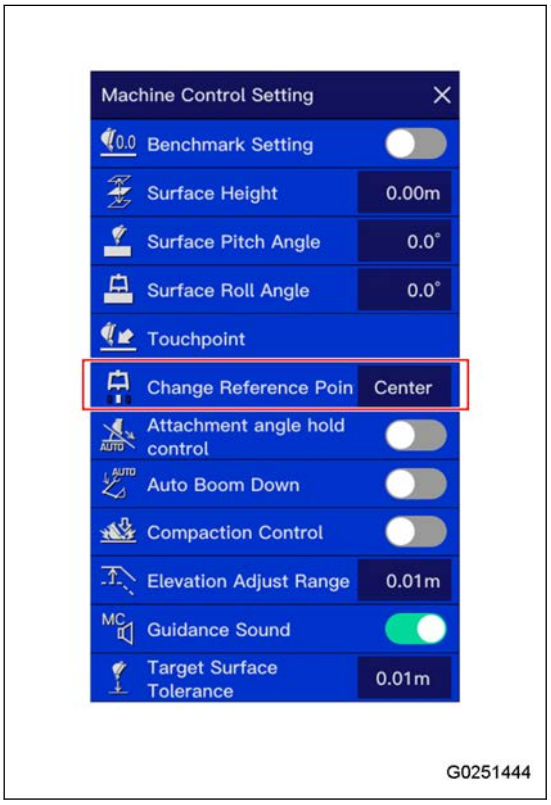

3. If you start the digging operation near the MAX reach, the construction surface can be dug deeper than the design surface (A) with the bucket edge or bucket bottom.
4. If the you do the boom LOWER operation while the arm IN operation is done at a point near the design surface such as during the reverse clearance operation, unexpected fluctuation of the bucket edge or shock can occur.

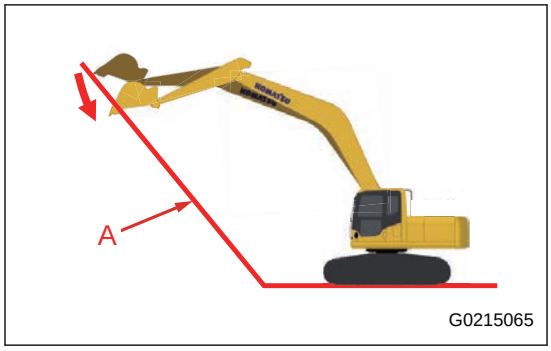

5. The machine control can be activated in an unintended area by the setting of the design surface (for example, when you do the 180 ° swing operation when you set the lower slope).

   In such case, turn off the machine control function or push the temporary control cancel switch to do the work.
   For how to operate, see “How to Temporarily Turn off Semi-Auto Mode Control (3-422)”.

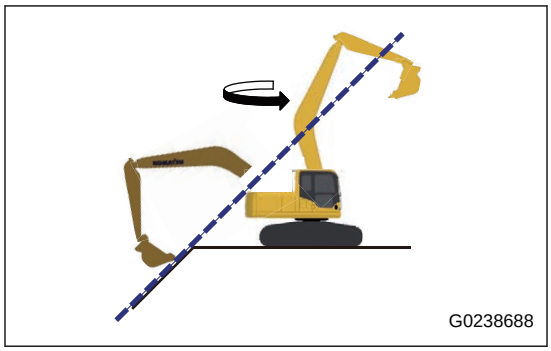

Prohibited Operations When You Use Semi-Auto Mode

Prohibition of Function During Lifting Work

Do not use the semi-auto mode while the lifting work is done on the work equipment.

If the semi-auto mode decelerates or stops, there is a danger that the lifted load causes damage to the structure around the machine, or it causes serious personal injury or death.

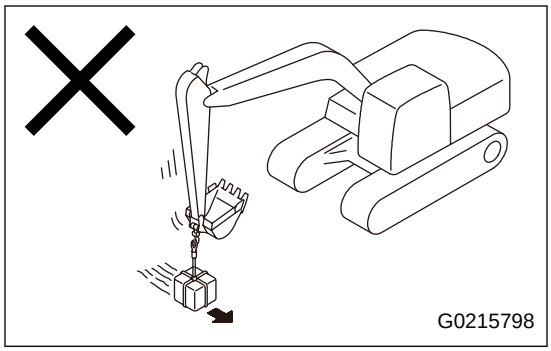

Prohibition of Function During Demolition Work

Do not use the semi-auto mode while the demolition work is done.

If the semi-auto mode decelerates or stops, there is a danger that the demolished structure collapses, the structure around it has damage, and serious personal injury or death can occur.

NOTICE

In addition to the above, operations that can cause serious personal injury or death are prohibited.
For details, see “Prohibited Operations (2-37)”.

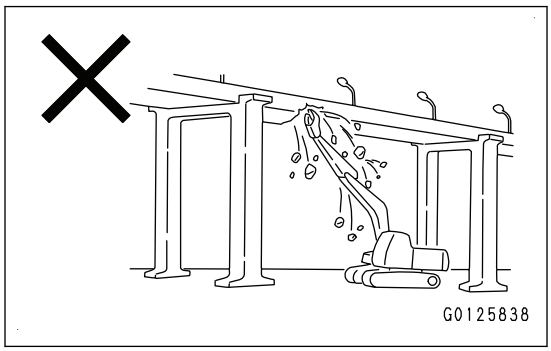

Precautions When You Use Semi-Auto Mode

When There is Possibility That Machine Becomes Unstable Because of Sudden Stop

The auto stop control in the semi-auto mode is activated, and the machine can stop suddenly.

Examples of works where sudden stops can let the machine lose stability are shown below.

Be sure of the safety around you before you operate the machine.

For the procedure to set the semi-auto mode to OFF, see “How to Switch to Manual Mode (3-422)”.

- When you do the work on a steep slope
- When you do the work on a slippery road
- When you do the work on soft ground where there is a danger of landslide

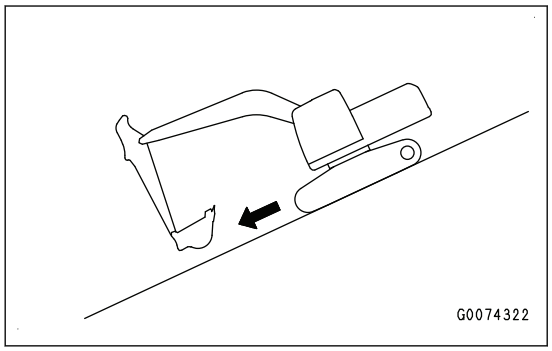

- Make a swing operation on a slope

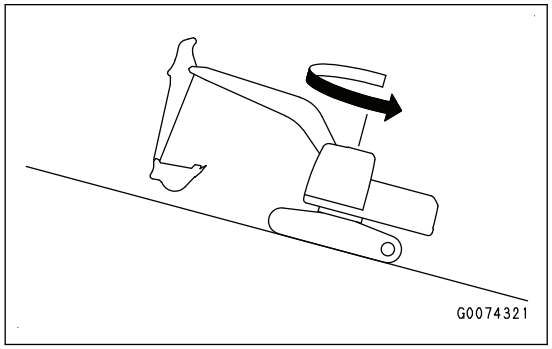

- When you do the work on a rough road

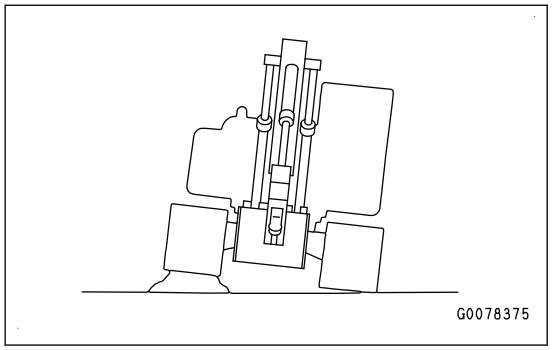

When There is Possibility That You Cannot Evacuate Machine Because of Machine Stop Control

⚠ CAUTION

If the emergency danger prevention operation is temporarily restricted while the 2D machine control is activated, push the temporary control cancel switch to do the evacuation operation.
For details, see “How to Temporarily Turn off Semi-Auto Mode Control (3-422)”.

If the control in the semi-auto mode is activated, the evacuation operation in an emergency can be temporarily restricted.

The works that follow are examples where the operation of the machine stop control can temporarily restrict the escape operation in an emergency.

Be sure of the safety around you before you operate the machine.

For the procedure to set the semi-auto mode to OFF, see “How to Switch to Manual Mode (3-422)”.

- Work under a cliff

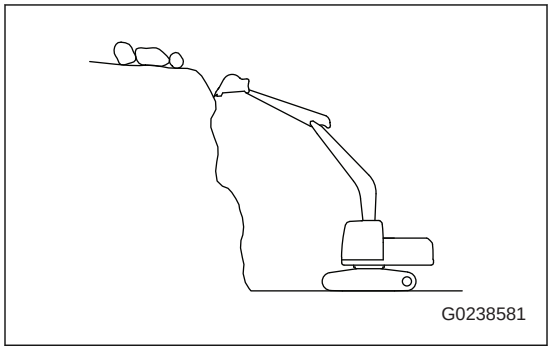

- Work near a cliff or road edge

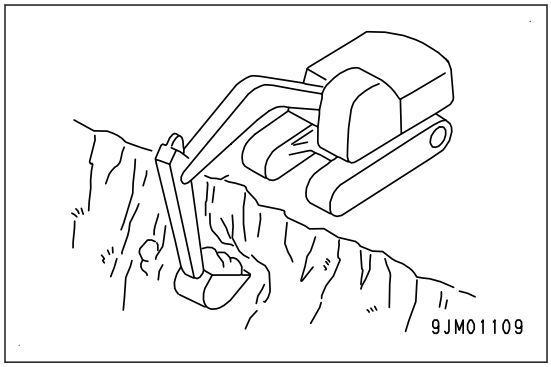

- Work on a structure such as a building

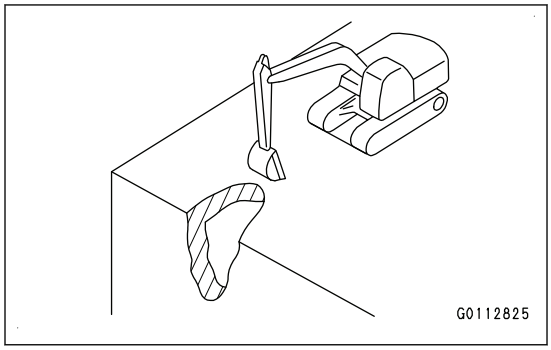

Precautions When You Replace Parts and Failures

NOTICE

- **Calibration is needed if the boom, arm, or bucket is replaced. In such a case, consult your Komatsu distributor.**
- **Do not remove, install, disassemble, and modify a sensor.**
  This may cause an malfunction of semi-auto mode.
  Ask your Komatsu distributor for this work to be performed.
- **If sensor is hit or damaged, check if the semi-auto mode operates normally.**
  If any problem is found, ask your Komatsu distributor for repair.

Semi-Auto Mode Settings

Change the mode between the semi-auto mode and manual mode as follows.

Change to Semi-Auto Mode

1. Make sure that the engine is started.
2. If the machine is on a steep slope, move the machine to a moderate slopes or level ground.
3. Make sure that the action level display (1) or caution lamp (2) is not shown on the machine monitor.

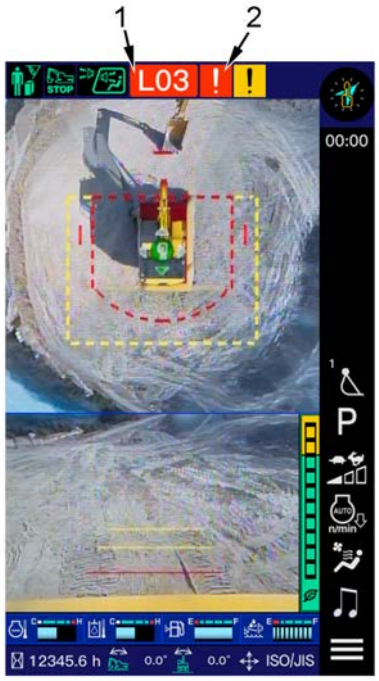

G0238689

4. Tap the 2D machine control/payload meter selector icon, and make sure that the 2D machine control bar (3) is shown.

   Also, make sure that no warning message is shown.

   REMARK

   When the payload meter function is used at the same time, the 2D machine control bar is shown on the center of the screen.
5. Make sure that all the control levers are at the NEUTRAL position.
6. Tap the 2D machine control bar (3) to do the machine control setting.

   For how to operate, see “Machine Control Setting (3-406)”.

G0238690

7. Push the auto/manual selector switch on the lever.

   For machines with tilt bucket, make sure that the tilt angle is stable, and push the auto/manual selection switch.

   REMARK

   For the setting of the auto/manual selector switches, see “Lever Switch Assignment (3-58)”, and set the mode to the desired switch.
   It is set to the right lever switch (b) as a default.

G0214417

When the mode changes to the semi-auto mode, the semi-auto mode symbol (4) is shown on the screen of the machine monitor, and the voice signal operates.

The semi-auto mode symbol (4) is shown for a specified time, and then it automatically goes off.

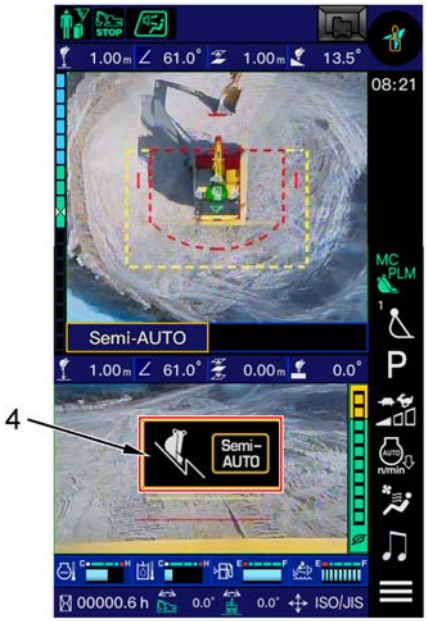

G0238691

- While the semi-auto mode is in operation, the semi-auto mode symbol is shown on the screen of the machine monitor.

  (Shown in green, frame flashes in yellow)

G0238692

- While the automatic control is not in operation in the semi-auto mode, the symbol that shows the semi-auto mode is in standby state is shown on the screen of the machine monitor.

  (Shown in blue, frame flashes in yellow)

G0238693

Machine Control Function During Travel

CAUTION

If you travel without the “Touchpoint” or “Laser Benchmark”, the target design surface that is set with the machine control function moves together.
After the travel is completed, examine the setting to make sure that the target design surface is correct.

When the machine starts the travel in semi-auto mode operation, the machine changes to the semi-auto standby state.
The buzzer operates, and the pop-up (A) is shown on the machine monitor at this time.

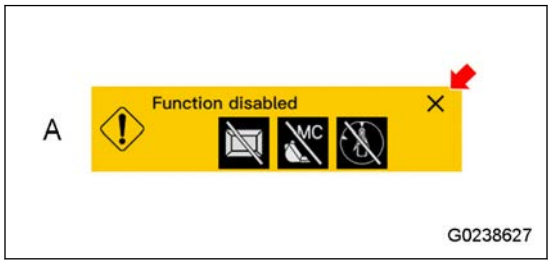

Also, if the machine travels for 10 seconds or more, “Benchmark Setting” and “Laser Benchmark” are turned OFF. And “Touchpoint” and “Laser Benchmark” are disabled.

The buzzer operates again, and the pop-up (B) is shown on the machine monitor at this time.

But, there is no buzzer or pop-up display only if the attachment posture hold control function is used independently.

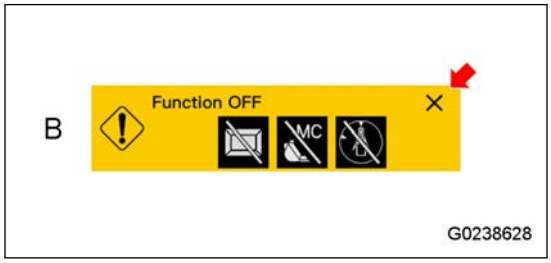

REMARK

If the travel time is less than 10 seconds, the pop-up (A) is hidden after the travel is completed, and the machine stays in the semi-auto standby state.
If the travel time is 10 seconds or more, the pop-up (B) is shown even after the travel is completed.
When you tap the CLOSE button, the pop-ups (A) and (B) are hidden. Even in this case, the function stays disabled or OFF during the travel.

How to Switch to Manual Mode

CAUTION

The machine operates as the operator operates in the manual mode.
In the manual mode, the automatic control is not activated even if the work equipment exceeds the design surface. Be careful not to dig too much during the work.

When the auto/manual selector switch on the lever is pushed in the semi-auto state, the mode changes to the manual mode.
In addition, if the machine travels for 10 seconds or more, if it is sensed that the blade edge is deeper than the design surface by 500 mm {1 ft 8 in} or if the machine has a failure, the mode automatically changes to the manual mode.

When the mode changes to the manual mode, the manual mode symbol is shown on the screen of the machine monitor, and the voice signal operates.

The manual mode symbol is shown for a specified time, and then it automatically goes off.

G0214519

How to Temporarily Turn off Semi-Auto Mode Control

CAUTION

If you push the temporary control cancel switch (1) with the lever activated while the stop control is in operation, the work equipment moves suddenly.
Set the lever to the NEUTRAL position, and push the temporary control cancel switch (1).

While the temporary control cancel switch (1) on the L.H. work equipment control lever is pushed, the control to the machine is disabled, and the machine operates as operated by the operator.

Secure the safety around the machine when you operate it.

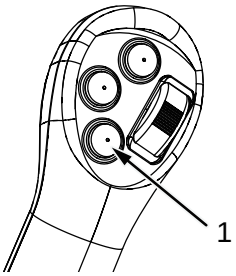

G0214418

The pop-up (2) is shown on the machine monitor at this time.

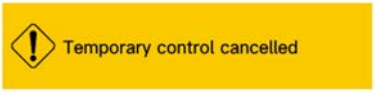

G0244101

Explanation of Function of Semi-Auto Mode

The semi-auto mode has the automatic ON control mode and ON/OFF selectable control mode.

Control Mode With Automatic ON Function

Function name	Contents of control
Auto grade assist	The boom is raised automatically along the design surface while the arm is operated. When the auto boom down is activated, the boom lowers automatically along the design surface.
Auto stop control	When the boom or bucket is operated, it stops automatically on the design surface.

Control Mode With Selectable ON/OFF Function

Function name	Contents of control
Auto boom down	The boom automatically lowers along the design surface while the auto grade assist is activated.
Attachment angle hold control function	The attachment angle is kept constant automatically while the auto grade assist is activated.
Compaction control	The tamping operation by the operator is sensed and the property of the auto stop control is changed. You can do the compaction with tamping of the bucket bottom in the semi-auto mode.

REMARK

You can set the Enable/Disable of the function for the selectable modes. For details, see “Machine Control Setting (3-406)”.

Auto Grade Assist

- The boom is automatically raised not to let the bucket dig deeper than the design surface (A) when the arm is operated.

  The boom is raised as necessary even when the operator does the boom LOWER operation.
  This function controls not only the bucket edge but also the outline of the bucket not to dig deeper than the design surface. (minimum distance control)

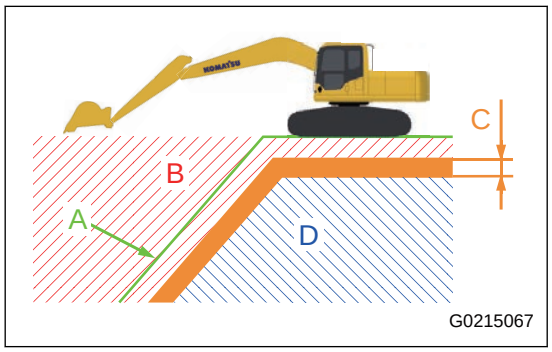

- This control is applied to the slope design surface (A) in which the angle (G) is 70 ° or below. On the slope design surface with the angle (G) of 70 ° or more, the control mode becomes the auto stop control during the arm IN operation (H), and it automatically stops the work equipment not to dig deeper than the design surface (A).

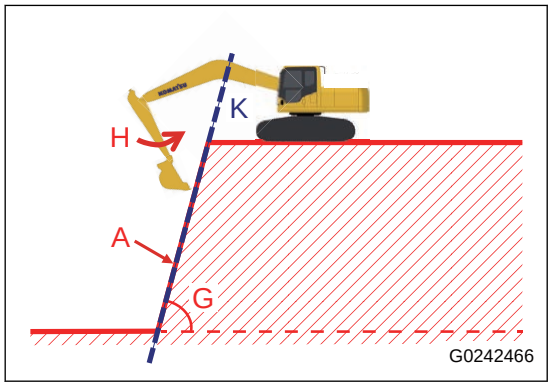

- The working mode becomes the manual mode for the slope surface with the angle (G) of 70 ° or more during the arm OUT operation (J).

  The working mode becomes the auto stop control during the bucket operation and boom LOWER operation.

- The operation changes in response to the digging quantity if the bucket digs deeper than the design surface (A).
  (B) Below 300 mm {1 ft}: The machine operates to reduce the digging quantity with the auto grade assist.
  (C) 300 mm {1 ft} or more, below 500 mm {1 ft 8 in}: The auto stop control is activated.
  (D) 500 mm {1 ft 8 in} or more: The manual mode is applied.

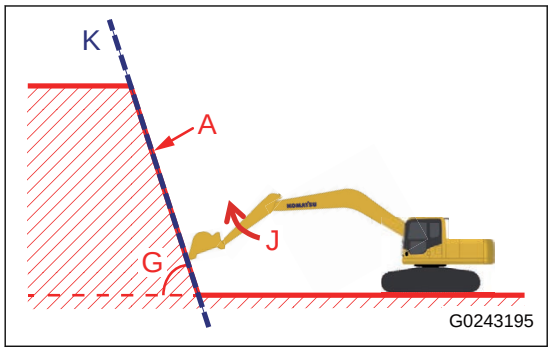

REMARK

Only one surface (K) can be set with the 2D machine control.
In addition, the design surface is not blocked by the shoulder and butt.

At finishing

- (E): The operation can be done with the arm control lever only.
- (F): You can move the bucket edge along to the design data for all working area with the multiple operations of the boom LOWER control lever and arm control lever.

REMARK

When the auto boom down is set, the auto grade assist is activated, and the boom operates along the design surface without the boom LOWER lever operation.

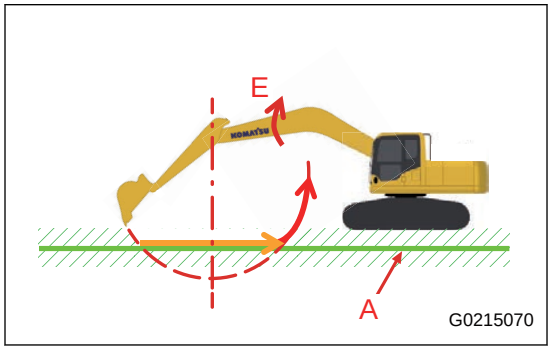

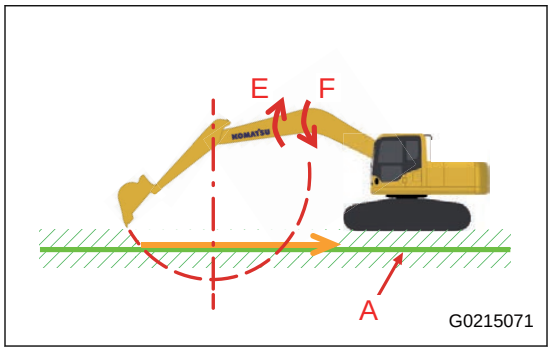

- The bucket angle is not automatically held. It is necessary to manually adjust the bucket angle to be held.

REMARK

When the attachment angle hold control is set, the auto grade assist operates along the design surface while the attachment angle is held even if the attachment lever is not operated.

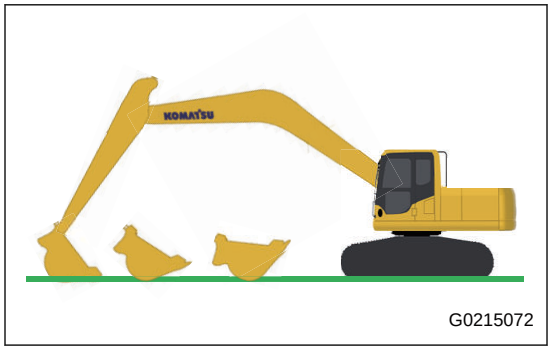

Auto Boom Down

- This function helps the boom LOWER operation automatically without the boom operation as necessary during the auto grade assist.
- When the boom is operated, the auto boom down is canceled, and the auto grade assist operates as the priority of the control is given to the operation by the operator.
- You can concentrate on the operations such as fine adjustment of the bucket angle and boom Raise/ Release operation during auto grade assist, and it gives sufficient time for the operator to examine the state of the numerical values on the monitor.
- You can tap the auto boom lower item that can be set with “Machine Control Setting (3-406)” to enable or disable this function.

NOTICE

To avoid danger, be sure to keep your hand on the boom control lever during the work.

(a) The boom is raised automatically.

(b) The boom is lowered automatically (auto boom down).

(c) Auto grade assist

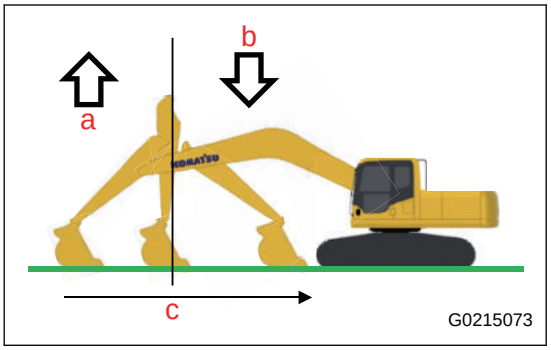

<Control mode icon>

(1): Function enabled

The auto boom down is ready for operation.

(2): Function activated

The auto boom down is in operation.

When the boom is operated while the function is activated, the state becomes (1) (Function enabled), and the priority of the control is given to the operation by the operator.

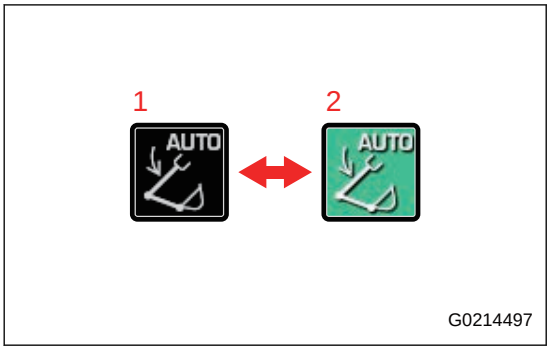

REMARK

- When the boom is operated, the priority of the control is given to the operation by the operator, and the auto boom down does not operate.
- The auto boom down is activated during the arm IN/OUT operation.
- If the boom moves away from the design surface by 100 mm {3.9 in} or more, the auto boom down does not operate in some cases.
- If the machine posture angle changes suddenly, the auto boom down is canceled.

Attachment Angle Hold Control Function

- When the auto grade assist is activated, it automatically helps the attachment operation to hold the attachment angle without the attachment operation.
- When the attachment is operated, the attachment angle hold control is canceled, and the auto grade assist operates while the priority of the control is given to the operation by the operator. Accordingly, the attachment angle can be changed with the attachment operation during the work, and the attachment angle can be held after it is changed.
- This function helps the leveling work with the constant bucket edge angle or with the rubbing of the attachment bottom.
- You can tap the attachment angle hold control item to be set with “Machine Control Setting (3-406)” to enable or disable this function.

NOTICE

- **To avoid danger, be sure to keep your hand on the attachment control lever during the work.**
- **If there is an error in the attachment parameter, the error also occurs in the attachment angle hold control. If the attachment angle does not align with the construction surface correctly, do the calibration of the attachment.**

(c) Auto grade assist

(d) The attachment angle is held.

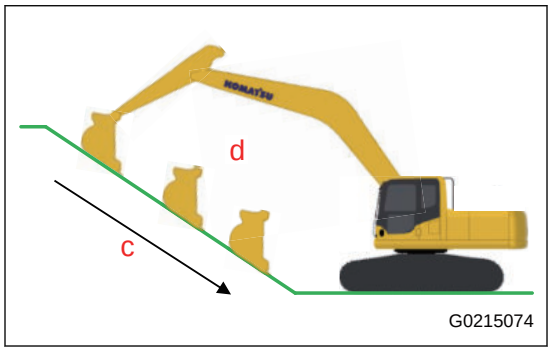

<Control mode icon>

(1): Function enabled

The attachment angle hold control is ready for operation.

(2): Function activated

The attachment angle hold control is in operation.

When the attachment is operated while the function is activated, the state becomes (1) (Function enabled), and the priority of the control is given to the operation by the operator.

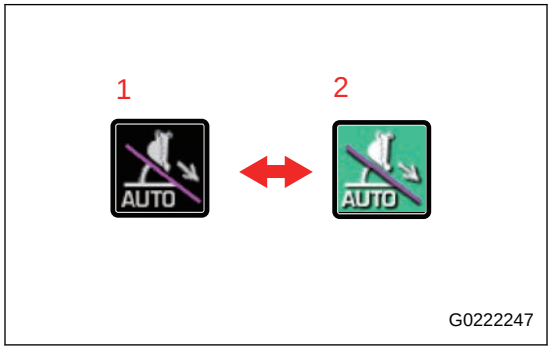

REMARK

- When the attachment is operated, the priority of the control is given to the operation by the operator, and the attachment angle hold control does not operate.
- The attachment angle hold control is activated during the arm IN/OUT operation.
- If the attachment is away from the design surface by 50 mm {2 in} or more, the function is not activated in some cases.

- When the attachment goes through the point where the angle of the design surface changes, the attachment angle is not adjusted.

  Adjust the attachment angle with the attachment operation as necessary.
  (e) The attachment angle can be changed with the bucket operation by the operator.

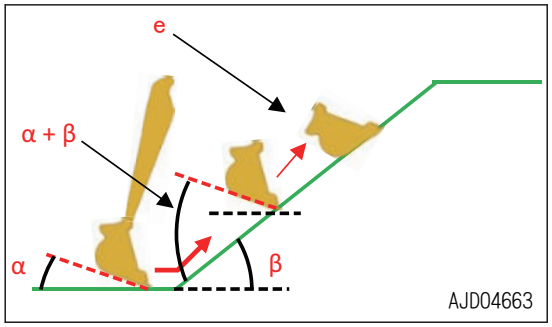

- When the attachment cylinder reaches its operation limit, the attachment angle hold control is automatically canceled.

  (f) Bucket cylinder stroke end

  (g) The attachment angle hold control is canceled.

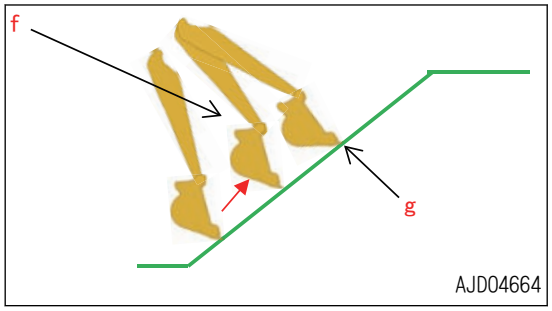

- You can cancel the attachment angle hold control temporarily with the lever switch operation.
  See “Lever Switch Assignment (3-58)”.
- When the work equipment does not operate smoothly because of friction with the ground, lower the arm speed, and continue the work.

Auto Stop Control (in Boom LOWER or Bucket Operation)

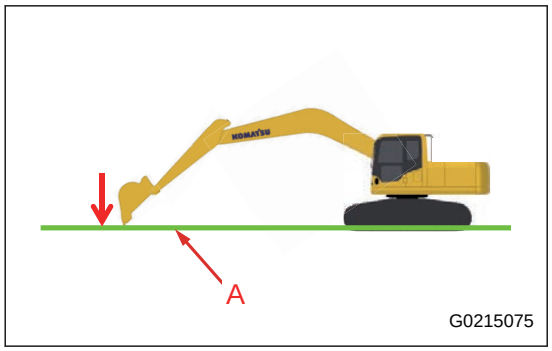

- When the boom LOWER or bucket is operated, this function automatically stops the work equipment not to let the bucket dig deeper than the design surface (A).
  This function controls not only the bucket edge but also the outline of the bucket not to dig deeper than the design data. (minimum distance control)
- The operation changes in response to the digging quantity if the bucket digs deeper than the design surface (A).
  Below 500 mm {1 ft 8 in}: The auto stop control is activated.
  500 mm {1 ft 8 in} or more: The manual mode is applied.

REMARK

If the boom is lowered or the bucket is operated suddenly, the auto stop control cannot be adjusted immediately, and there is a danger that the construction surface can be dug deeper than the design surface (A).

Compaction Control

- This function helps the tamping work on the construction surface in the semi-auto mode.
- When sudden operation of the boom by the operator is sensed while the compaction control is enabled, the property of the auto stop control is changed, and the tamping work becomes available.
- The auto stop control against the design surface is not canceled. As a result, unevenness is reduced in the tamping work, and the machine bounce in the boom LOWER operation is reduced.
- When the boom lever is operated slowly, the compaction control does not operate.
- You can tap the compaction control item that can be set with “Machine Control Setting (3-406)” to enable or disable this function.

NOTICE

- **This function is used for the tamping operation. And the precision of the automatic stop control will be degraded. After the tamping operation, align the bucket edge with the construction surface, and examine the value on the monitor.**
- **When the tamping operation is done continuously, there can be a difference in the cylinder stroke, and the screen display can be different from the actual posture. When you do the tamping work continuously, move each cylinder to the stroke end from time to time, and do the stroke reset compensation.**
- **If the boom is operated fast such as in rough operation, sudden operation of the boom can be sensed and interfere with the operation. Set the Enable/Disable as necessary.**
- **Continuous sudden operation of boom RAISE/LOWER**

  ⇒ Compaction control activates.

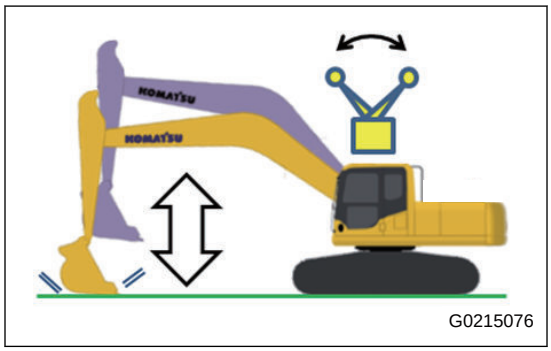

- **Sudden operation of boom LOWER**

  ⇒ Compaction control activates.

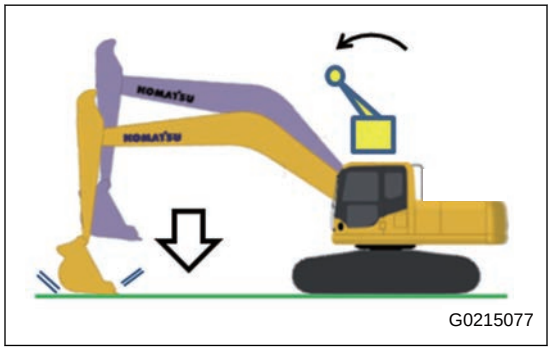

- **Slow operation of boom LOWER**

  ⇒ Compaction control does not activate.

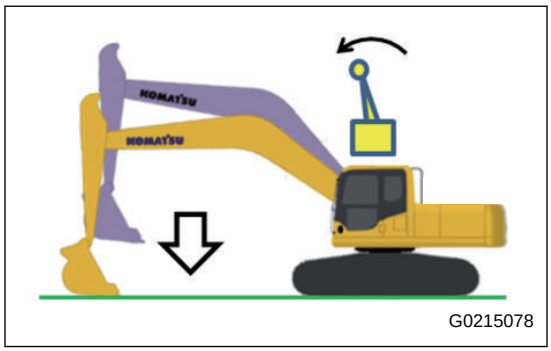

<Control mode icon>

(1): Function enabled

The compaction control is ready for operation.

(2): Function activated

The compaction control is in operation.

When the bucket starts to be operated while the function is activated, the state becomes (1) (Function enabled), and the priority of the control is given to the operation by the operator.

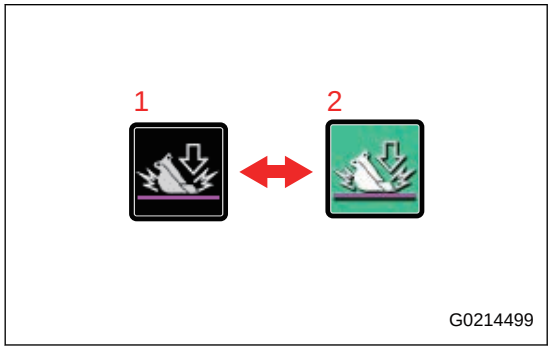

REMARK

- When sudden operation of the boom LOWER is done near the design surface, the bucket cannot tamp the ground correctly in some cases.
  In such a case, do the compaction control at the area far from there.
- When the arm lever is operated, the priority is given to the auto grade assist, and the compaction control cannot operate correctly in some cases.
- This function is useful when you thrust the bucket edge into hard soil near the design surface in the semi-auto mode.
- When sudden operation of the boom is sensed, the compaction control can be activated and the operation icon can be shown frequently. This is not a problem.

Attachment Angle Hold Control Temporary Cancel Switch

- If you want to cancel the attachment angle hold control temporarily, push the attachment angle hold control temporary cancel switch set by the operator on the lever switch.
- You can cancel the attachment angle hold control temporarily during the work to change the attachment angle easily.

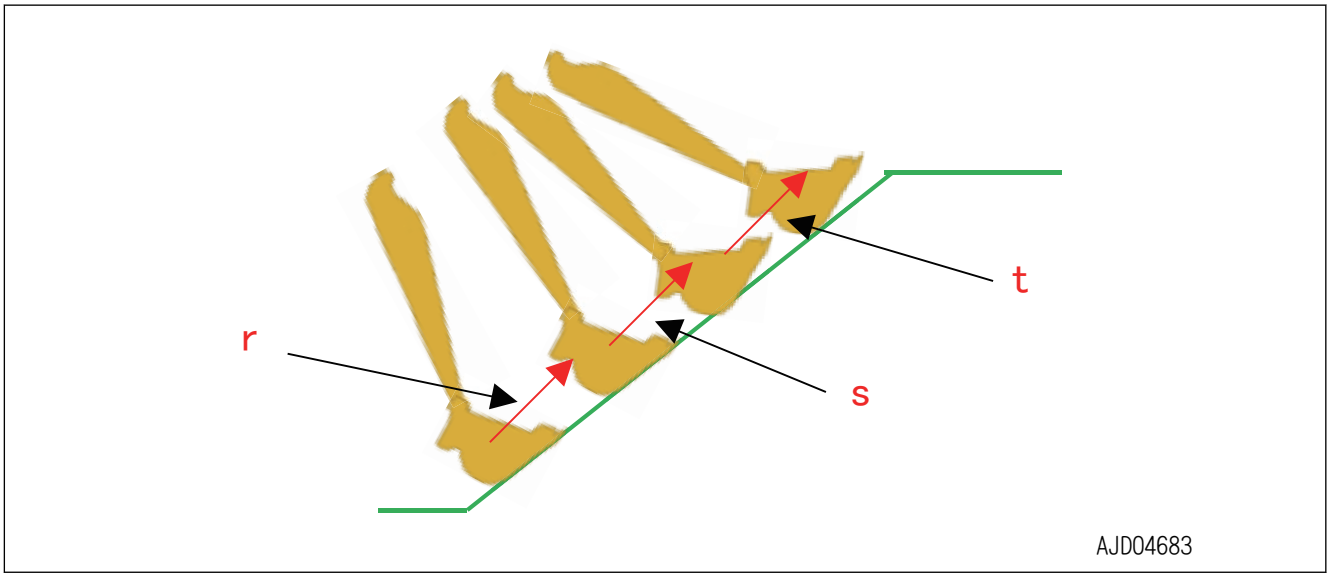

(r) Attachment angle hold control: ON

(s) The attachment angle hold control is set to OFF while the switch is pushed.

(t) The attachment angle hold control is set to ON when you let go of the switch.

Error of Semi-Auto Mode

Phenomenon	Check items	Reference
The auto grade assist control does not operate while the semi-auto mode is shown.	Make sure that the design surface is set correctly. The auto grade assist control does not operate without the design surface.	“Machine Control Setting (3-406)”
	Make sure that the bucket edge is near the design surface. If the machine does the digging work at the area above the design surface, the machine is in the standby state, and the auto grade assist control does not operate.	-
	Make sure that the travel lever is not operated. The auto grade assist control does not operate during travel.	“Precautions for Operation (3-413)”
	Make sure that the digging distance does not exceed the design surface by 300 mm {1 ft} or more. If the digging distance exceeds the design surface by 300 mm {1 ft}, the auto stop control is activated.	“Explanation of Function of Semi-Auto Mode (3-423)”
	Make sure that the digging distance does not exceed the design surface by 500 mm {1 ft 8 in} or more. If the digging distance exceeds the design surface by 500 mm {1 ft 8 in} or more, the mode changes to the manual mode.	
	Make sure that there is no defective setting on the set design surface. If there is a defective setting, the auto grade assist control cannot operate correctly.	-
	If the engine runs at low speed, run it at full speed.	-
The auto stop control does not operate while the semi-auto mode is shown.	Make sure that the design surface is set correctly. The auto stop control does not operate without the design surface.	-
	Make sure that the bucket edge is near the design surface. If the machine does the digging work at the area above the design surface, the machine is in the standby state, and the auto grade assist control does not operate.	-
	Make sure that the travel lever is not operated. The auto stop control does not operate during travel.	“Precautions for Operation (3-413)”
	Make sure that the arm is not operated. The auto grade assist control is operated while the arm is in operation.	“Explanation of Function of Semi-Auto Mode (3-423)”
	Make sure that the digging distance does not exceed the design surface by 500 mm {1 ft 8 in} or more. If the digging distance exceeds the design surface by 500 mm {1 ft 8 in} or more, the mode changes to the manual mode.	
	Make sure that there is no defective setting on the set design surface. If there is a defective setting, the auto stop control cannot operate correctly.	-

Phenomenon	Check items	Reference
When the machine goes out of the design surface near the design surface boundary while the auto grade assist control is in operation, the machine operation is not cancelled.	Make sure that the machine is not out of the design surface. If the machine goes out of the design surface while the auto grade assist control is in operation, the auto grade assist control is cancelled, and the machine state changes to the standby mode. At this time, change the machine state to the standby mode slowly to prevent a sudden change of the machine behavior.	“Precautions When You Replace Parts and Failures (3-418)”
The arm does not operate along the design surface near the arm vertical position during the auto grade assist control.	Make sure that the boom LOWER operation is done. If the boom LOWER operation is not done, the bucket edge can move away from the design surface. The semi-auto mode restricts the movement of the work equipment against the operation controlled by the operator. It is necessary to do the operation in the direction to dig into the design surface.	-
The arm stops before the stroke end during the auto grade assist control.	If the arm is near the stroke end, the auto stop control operates. If the digging distance exceeds the design surface by 300 mm to 500 mm {1 ft to 1 ft 8 in}, the auto stop control is activated, and the bucket edge stops.	“Explanation of Function of Semi-Auto Mode (3-423)”

Error of Precision

Phenomenon	Check items	Reference
When you examine and adjust the bucket edge precision, the value is different largely.	• Make sure that the selected bucket edge is the same as the bucket edge on the benchmark. • Make sure that the installed attachment is selected correctly and the calibration is completed. • Set the benchmark setting to OFF one time, then set the benchmark setting to ON again to set the design surface again. • Make sure that the bucket cylinder reset is done. If the precision is not sufficient even after all the items are examined, replacement of the sensor or calibration can be necessary. Consult your Komatsu distributor for investigation of cause and repair.	“Attachment Setting (3-300)” “Machine Control Setting (3-406)”
The finishing work cannot be done accurately. • The average height of the finished surface is deeper than the design data or the bucket does not touch the surface. • Wavy finish surface occurs.	Make sure that there is no defective setting on the set design surface. If the there is a defective setting, the semi-auto mode cannot operate correctly.	-
	Make sure that the machine does not move on an unstable ground. If the machine moves largely, it can dig the surface deeper than the design surface because of the response of the IMU sensor to sense the machine posture. This is not a problem.	“Precautions When You Replace Parts and Failures (3-418)”
	Make sure that the weight setting is applicable to the installed bucket. If the bucket weight is not set correctly, the precision of the construction can be degraded. Adjust the weight to an applicable setting.	“Change in Weight Adjustment (3-305)”
	Set the benchmark setting to OFF one time, then set the benchmark setting to ON again to set the design surface again. If the function is used for a long time, the design surface can move because of the properties of the sensor. This is not a failure.	“Machine Control Setting (3-406)”

Payload Meter Function

(If installed)

⚠ WARNING

- **Before you move the machine for a loading operation or calibration, be sure of the safety around the machine.**
- **Do not move the machine while you operate the monitor.**
  When you operate the monitor, stop the machine and set the lock lever to the LOCK position.
- **When you operate the machine, do not look only at the monitor. Be sure to look around the machine and operate it.**

The payload meter function measures the weight of the excavated soil by the bucket, and records it on the machine.

This function can be used to do the operations that follow.

- Show and record the weight of the load loaded in the bucket
- Show and record the weight of the load loaded on a truck, etc.

NOTICE

- **The payload meter function is used to help the worker measure the payload and reduce the work of payload management. It does not prevent overloading fully.**
- **If the loading is done while the machine is tilted too much or while the machine is not stable, the load cannot be measured correctly. Loading operations must be done when the machine is in a level and stable condition.**
- **When the attachment with tilt mechanism or attachment with rotate mechanism is installed, you cannot measure the load correctly if it is in the tilted or rotated posture. For the loading work, make the bucket horizontal and in a face-to-face posture.**
- **Payload meter performance has limits. The shown value on the payload meter can have errors caused by adhesion of soil, method of operation, and soil type. Take the shown weight as a reference.**
  If you try to set to 100 % of the payload, overloading can occur. Set around 90 % as a guideline.
- **The payload meter is not a validated measuring instrument. Do not use the measured data for trades or certifications.**
  For trades or certifications, use a measuring instrument such as a truck scale to measure weights.

REMARK

When the payload meter function is used on the ICT monitor, the payload meter function cannot be used on the machine monitor.

How to Use Payload Meter Function

Before you use the payload meter function, reset the stroke of the bucket cylinder and do the payload meter calibration.

For how to reset the stroke of the bucket cylinder, see “Cylinder Function State Caution Lamp (3-33)”.

For the payload meter calibration, see “Payload Meter Calibration (3-73)”.

When You Use Payload Meter Function on Machine Monitor

When payload meter function is used on the ICT monitor, payload meter function cannot be used on the machine monitor.

When you use payload meter function, see “When You Use Payload Meter Function on ICT Monitor (3-444)”.

Machine Monitor Display

The displays and their meanings on the machine monitor related to the payload meter function are as follows.

(1) 2D machine control/payload meter selector icon

(2) Payload meter display part

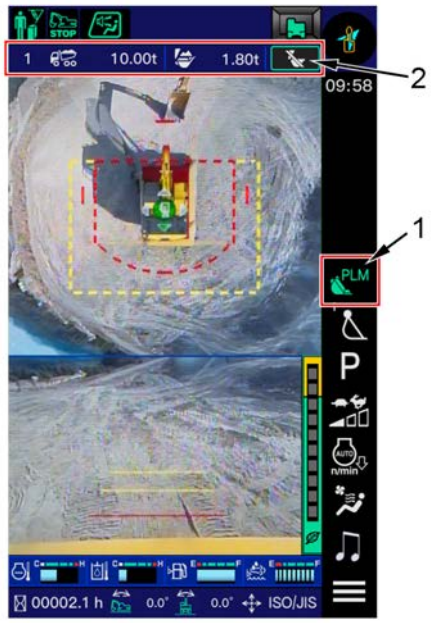

G0238498

The 2D machine control/payload meter selector icon is shown as follows. The state changes each time the icon is tapped.

(a) 2D machine control/payload meter function is disabled.

(b) 2D machine control is enabled.

(c) Payload meter function is enabled.

(d) 2D machine control/payload meter function is enabled.

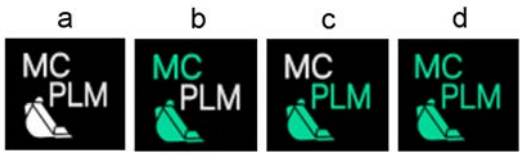

G0238566

REMARK

The contents of the display are different with the usage state of the ICT monitor.

The icons in payload meter display part and their meaning are as follows.

Remaining payload on truck display (3)

Shows the weight to reach the truck maximum payload. The colors and meanings of the text are as follows.

White: At or below maximum payload of the truck

Red: The target payload of the truck is exceeded

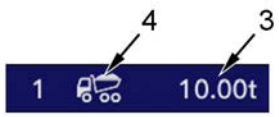

G0238500

REMARK

When the target payload of the truck is exceeded, the excessive weight above the maximum payload of the truck is shown.

Truck icon (4)

The display color of the truck icon changes in response to the payload. The colors of the icon are as follows:

White: There is room in the truck payload.

Yellow: The target payload of the truck is likely to be reached with the next loading.

Green: The payload loading completion percentage is reached.

Red: The target payload of the truck is exceeded

Bucket icon (5)

The icon color shows whether the weighing is completed. The colors and meanings of the icon are as follows.

White: The weighing is not completed.

Green: The weighing is completed.

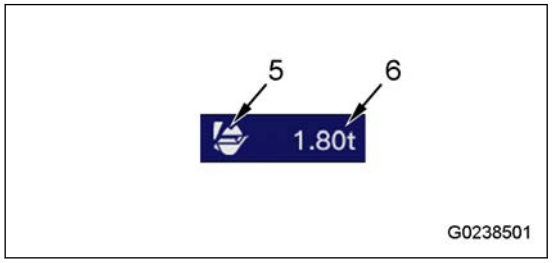

NOTICE

Weighing is to calculate the loaded weight in the bucket accurately and to record it.

Weighing is done when the machine makes a swing after an excavating operation.

If you make a dump operation before the weighing completes, the precision of payload meter function deteriorates.

Bucket payload display (6)

The current weight of the load in the bucket is shown.

If the bucket icon (5) is shown in white, the weighing is not completed. Use the value shown as a reference.

Tap the button (7) to change the measurement state of loading start, loading stop, and loading restart of the payload meter function.

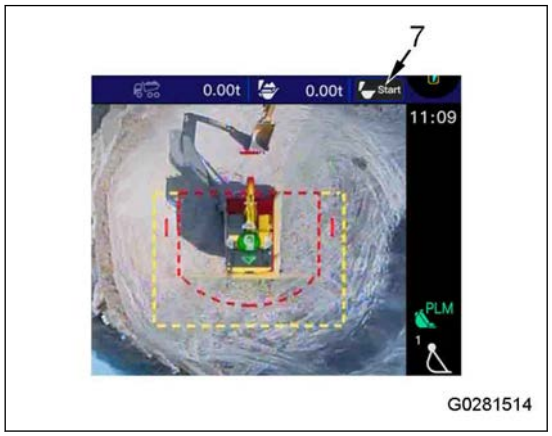

Loading start button

Tap it to start the measurement with payload meter function.

This is not shown during the measurement with payload meter function.

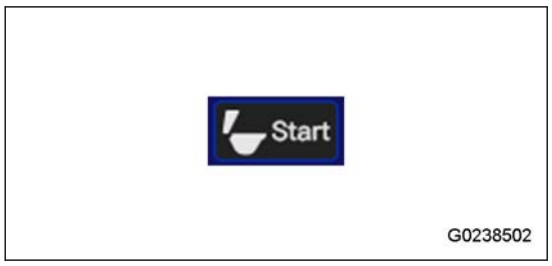

Loading pause button

Tap it to pause the measurement with payload meter function.

This is not shown when payload meter function is not in measurement.

Loading restart button

Tap to start the paused measurement with payload meter function again.

This is not shown when payload meter function is not in measurement or not paused.

How to Use Payload Meter Function (Machine Monitor)

Activate Payload Meter Function

1. Tap the 2D machine control/payload meter selector icon (1) to set it to the state of (c) or (d).

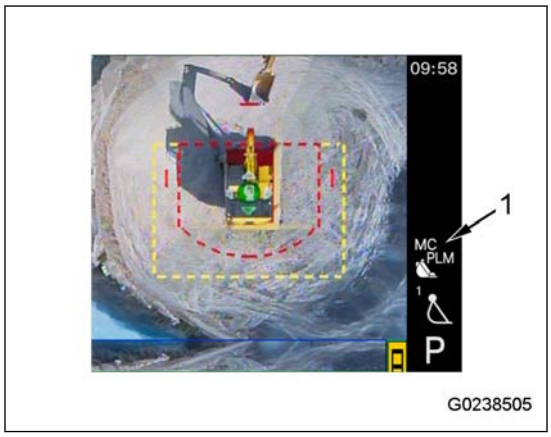

REMARK

When payload meter function is used on the ICT monitor, the state does not change to (c) or (d).

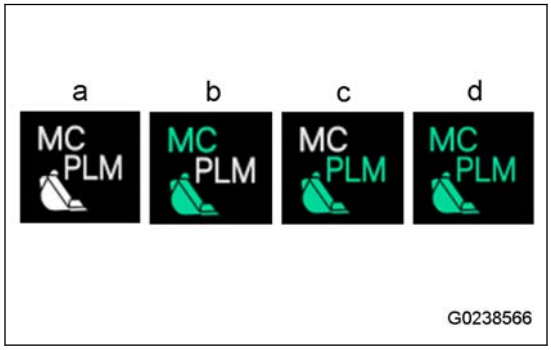

2. When payload meter function is activated, payload meter display part (2) is shown on the top of the machine monitor.

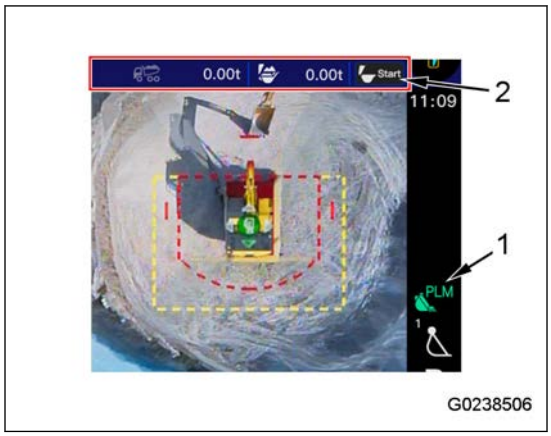

Select Truck and Start Measurement

1. Tap the truck icon (3).

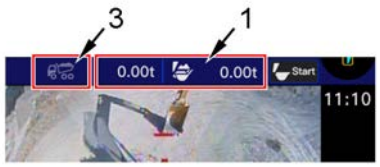

G0238507

Or, tap the range of (1) to show the payload meter setting, and tap truck selection (2).

The truck selection screen is shown.

REMARK

- If “Truck list select (machine monitor)” is allocated to a lever wheel, you can operate the lever wheel up or down to show the truck selection screen.
- To cancel the selected truck and go back to the no trucks selected condition, tap truck selection cancel (7) on Payload Meter setting screen.

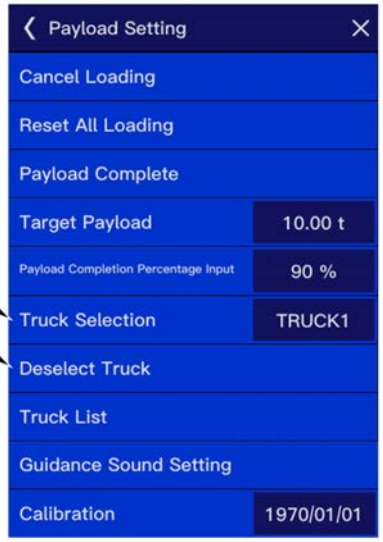

G0238508

2. Tap the loading target truck from the truck list.

REMARK

- When you select the truck and start the weighing, the target payload in the truck information is applied.
- Set the truck information in advance. For the setting procedure, see “When You See or Edit Registered Truck Information (3-475)”.
- If “Truck list enter (machine monitor)” is allocated to a lever switch, and “Truck list select (machine monitor)” is allocated to a lever wheel, you can operate the lever wheel to move the cursor on the truck display in the input direction. To move the cursor continuously, operate and hold the wheel for 2 seconds or more. When you push “Truck list enter (machine monitor)” switch when the cursor is on the truck on which you want to do the loading, the truck is selected.

G0238509

3. Tap the loading start button.

The weighing starts.

REMARK

If “Payload Start/Stop” is allocated to a lever switch, push the switch to start loading.

G0238502

Do Not Select Truck and Start Measurement

1. Tap the loading start button (8) while a truck is not selected.

   The measurement starts.

   REMARK

   - When the weighing starts and a truck is not selected, Target Payload set by Payload Meter is applied as Target Payload.
   - Set Target Payload in advance. For the setting method, see “Set Target Payload Weight (3-490)”.
   - If “Payload Start/Stop” is allocated to a lever switch, push the switch to start loading.

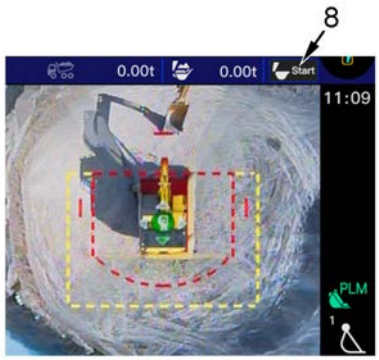

G0238510

Do Measurement and Register Payload

When you tap the loading start button to start the measurement, the truck icon becomes non-transparent.

REMARK

Tap the loading start button before you take the soil or sand into the bucket. If you tap the loading start button after the loading operation starts, the weight can possibly not be correctly measured.

1. Excavate the soil or sand.

   REMARK

   If the bucket payload is 300 kg {661.5 lb} or below, the measurement does not start.

2. Make a swing and measurement.

   When the weighing is completed, the bucket icon (4) changes to green, and the buzzer operates.

   NOTICE

   - **Weighing is to calculate the loaded weight accurately and to record it.**
   - **Do the swing operation for 45 ° or more as a rough guide.**
   - **If the swing angle is small, the weighing of the bucket load cannot be completed before the dumping. If the dumping is done before the weighing is completed, the precision deteriorates. Make sure that the weighing is completed before the dumping.**
   - **After you excavate, make an arm IN operation until the arm becomes vertical, and then start the swing. If you make an arm IN operation to the stroke end, or a swing operation while the boom is at highest position, the measurement precision can deteriorate. If you feel there is a problem with the measured value, do the swing operation again with the arm in an approximately vertical position, and then measure the weight again. For the method of remeasurement, see “Measure Again at Loading (3-458)”.**

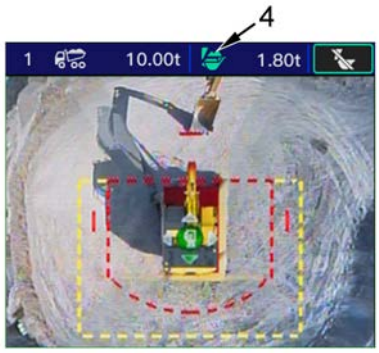

G0238511

REMARK

You can set the buzzer sound ON or OFF. For the setting method, see “Guidance Sound Setting (3-492)”.

3. Make sure that the weighing is completed before you do the dumping of the soil or sand fully in the bucket into the dump truck body.

REMARK

When you discharge the soil or sand fully in the bucket, do the dumping operation until the bucket angle (A) becomes 30 ° or more.

When the bucket angle (A) is 30 ° or less, the dumping will be in the tip-off mode.

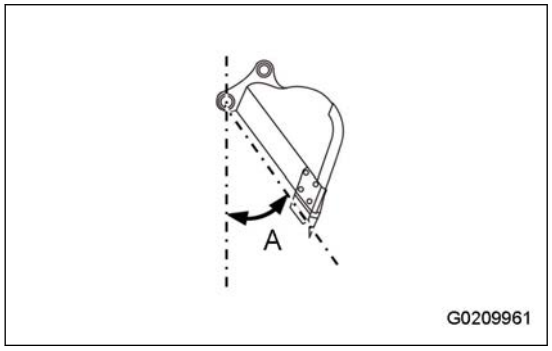

4. Continue loading until the truck icon (3) changes to yellow.

REMARK

- To stop the measurement of payload meter function during loading, tap the loading pause button (9). The truck icon (3) and the weight to reach the maximum payload (11) are grayed out. Even if you do a digging or dumping work during this time, it is not reflected in the payload.
- To start the measurement of payload meter function again, tap the loading start button (8).

5. When the target payload is likely to be reached with the next loading operation, the truck icon (3) changes to yellow, the buzzer operates, and a message is shown at the center of the machine monitor.

REMARK

You can set the buzzer sound ON or OFF. For the setting procedure, see “Guidance Sound Setting (3-492)”.

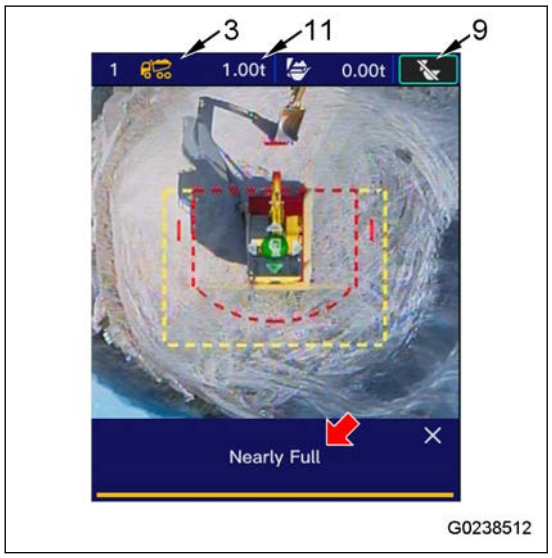

6. Excavate the soil or sand. Do the final loading adjustment. Do the dumping. The function to adjust the loading weight is called the tip-off function. There are 2 modes.

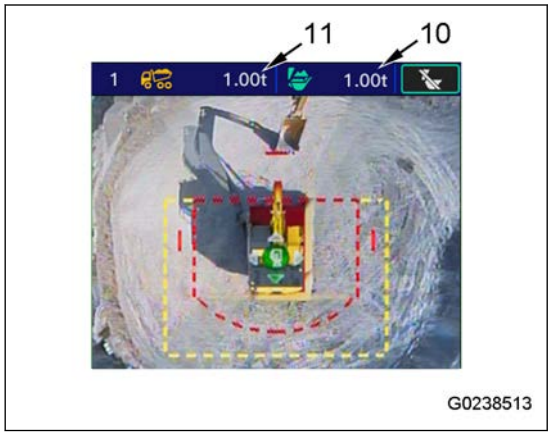

(a) Tip-off truck mode (when you adjust the loading weight on the truck body)

1) After you excavate roughly, make a swing to move the bucket over the dump body. When the weighing is completed, the bucket icon (4) changes to green.
2) If overloading is predicted when all the soil and sand in the bucket are loaded, “Overloaded (Warning)” is shown on the machine monitor. Also, the buzzer operates intermittently.
3) Operate the bucket and shake it to drop the soil or sand in the bucket to the dump body of the truck.

REMARK

- When the bucket angle (A) becomes 30 ° or more, it is judged that the soil or sand fully in the bucket are loaded on the truck. Do the dump operation while you keep the bucket angle 30° or less. A larger angle can cause overloading or precision deterioration of payload meter function.
- The measurement value sways largely when the bucket is operated quickly in the tip-off truck mode. Read the value in a static and stable state for payload adjustment.

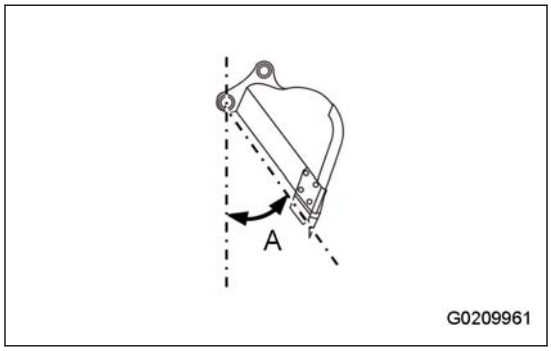

4) When the payload loading completion percentage is reached after you shake off soil or sand, the truck icon (3) changes to green. The buzzer operates, and “Payload Complete” is shown. Complete the operation to shake off the soil or sand.
5) After you complete the loading adjustment, make a swing to the excavating area.

NOTICE

When you do the dumping in the tip-off truck mode, be sure to make a swing to go back after you complete the dumping.
The discharged weight in the tip-off truck mode is reflected to the dump truck after the swing to go back. If you complete the payload adjustment before the swing to go back, the recorded payload value will have an error.

(b) Tip-off pile mode (when you adjust the bucket payload at the current location)

1) Operate the work equipment and adjust the volume of soil or sand in the bucket to make bucket payload (10) equal to or below the remaining load to the truck payload (11).
2) When the adjustment is completed, Overloaded (Warning) goes off.

REMARK

If you make a swing operation, the weighing is completed in some cases. When you adjust in the tip-off pile mode, complete the adjustment before you make a swing operation.

3) After you complete the adjustment, do the same operation as normal loading.

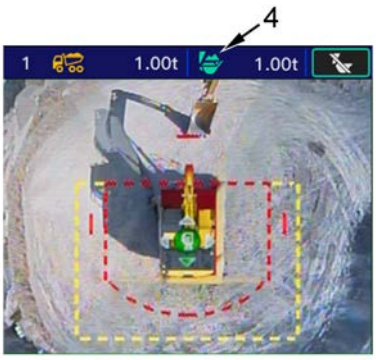

G0238516

7. When the payload loading completion percentage is reached, “Payload Complete” is shown.
8. Tap the range of (1) to show Payload Meter setting.

REMARK

The payload loading completion percentage is a function that tells the completion of loading at the set ratio to the maximum payload. For the setting method, see “Set Payload Loading Completion Ratio (3-491)”.

G0238517

9. Tap “Payload Complete”.

REMARK

If you cannot register the loading result after the loading is completed, make a swing to the excavating area.

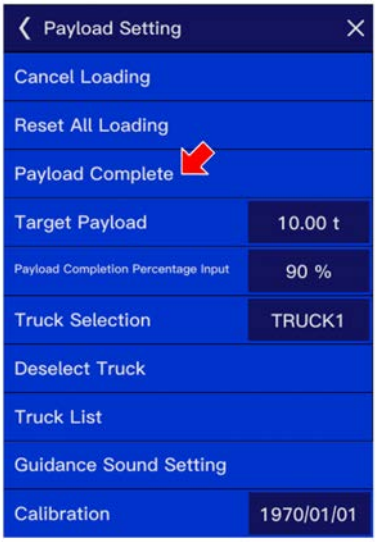

G0238518

10. See the shown content, and tap the checkmark button.

    The weight of the material loaded on the truck is recorded.

    REMARK

    If “Payload Complete” is allocated to a lever switch, the confirmation screen is shown when the switch is pushed. When you push the same switch again, you can record the loading result.

11. When payload loading result is done, the selected truck is canceled and payload meter function stops.
    If you continue to use payload meter function, start from “Select Truck and Start Measurement (3-438)” or “Do Not Select Truck and Start Measurement (3-439)”.

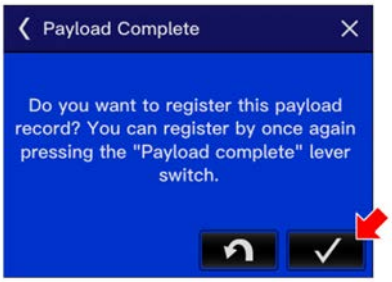

G0238519

When You Use Payload Meter Function on ICT Monitor

When the payload meter function is used on the ICT monitor, the payload meter function cannot be used on the machine monitor.

ICT Monitor Display

The payload meter function-related display items on the ICT monitor and their meanings are as follows.

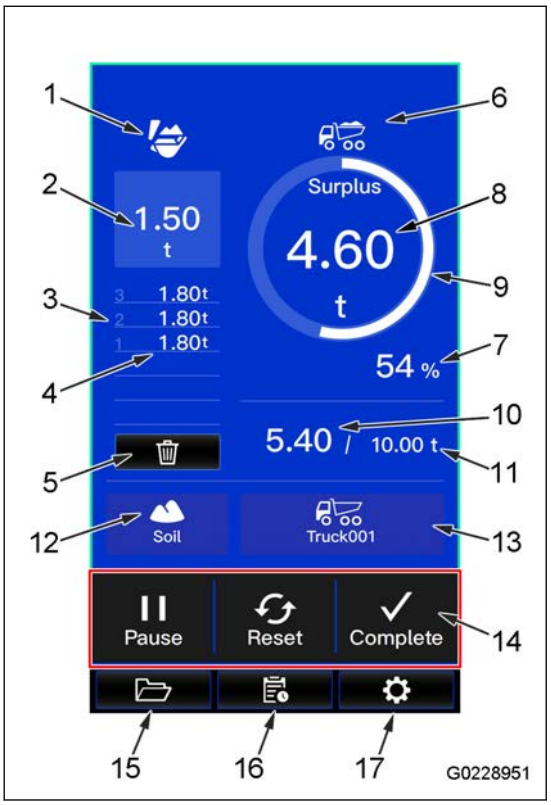

(1) Bucket icon

The icon color shows whether the weighing is completed.

The colors and meanings of the icon are as follows.

White: The weighing is not completed.

Green: The weighing is completed.

NOTICE

Weighing consists of accurate calculation and registration of the load in the bucket.
The weighing is done when the machine makes a swing after an excavating operation.
If you make a dump operation before the weighing completes, the precision of the payload meter function deteriorates.

(2) Bucket load

The current weight of the load in the bucket is shown.

If the bucket icon (1) is shown in white, the weighing is not completed. Use the value shown as a reference.

(3) Number of times of loading, (4) Weight history

The recent loading history is shown. The example in the figure shows that the 2nd time load to the currently loaded truck was 1.80 t.

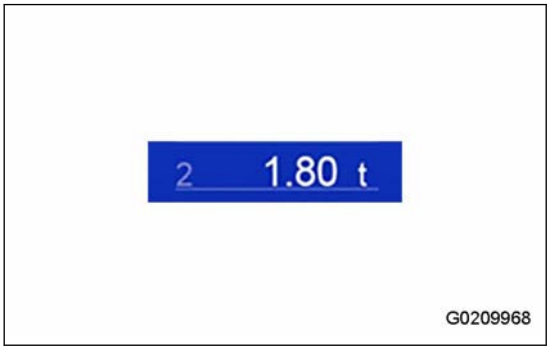

(5) Last loading history delete button

Tap this button to delete the last 1 loading history.

(6) Truck icon, (7) Loading percentage

The display color of the truck icon (6) and the loading percentage (7) changes in response to the load. The colors show meanings as follows.

White: There is a margin in the truck payload.

Yellow: The target payload of the truck is likely to be reached with the next loading.

Green: The payload full percentage is reached.

Red: The target payload of the truck exceeded.

(8) Remaining load to truck payload, (9) Payload graph

The weight and percentage to reach the truck maximum payload are shown. The colors and meanings of the payload graph (9) are as follows.

White: There is a margin in the truck payload.

Green: The payload full percentage is reached.

Red: The target payload of the truck exceeded.

(10) Loading result, (11) Maximum payload

The loaded weight on the truck and the maximum payload of the truck are shown.

White: There is a margin in the truck payload.

Yellow: The target payload of the truck is likely to be reached with the next loading.

Green: The payload full percentage is reached.

Red: The target payload of the truck exceeded.

(12) Material selection

The material currently selected is shown.

(13) Truck selection

The truck currently selected is shown.

(14) Loading control bar

Shows the loading start button, loading pause button, loading restart button, loading reset button, and loading complete button.

Loading start button

Tap it to start the measurement with the payload meter function.

This is not shown during the measurement with the payload meter function.

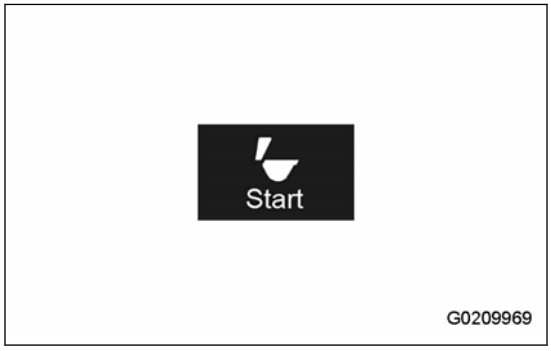

Loading pause button

Tap it to pause the measurement with the payload meter function.

This is not shown when the payload meter function is not in measurement.

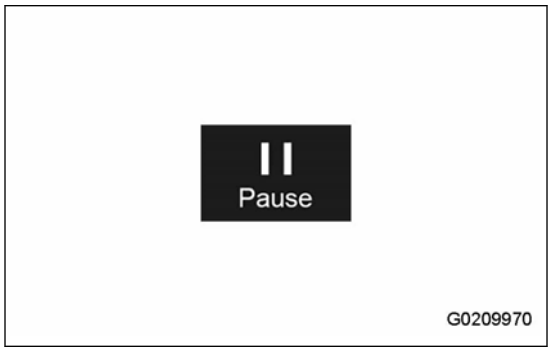

Loading Restart button

Tap to start the paused measurement with the payload meter function again.

This is not shown when the payload meter function is not in measurement or not paused.

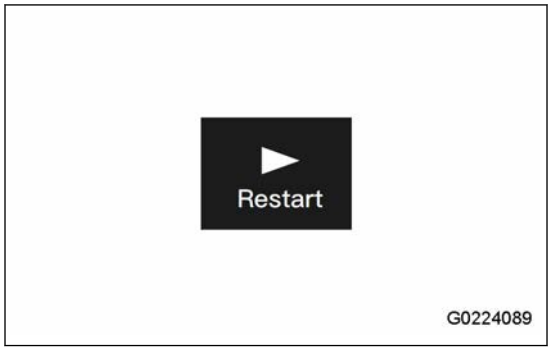

Loading Reset button

Tap it to reset the loading history for the currently loaded truck.

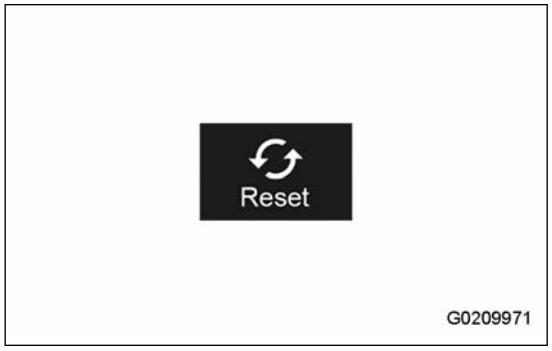

Loading complete button

Tap to register the loading result when the loading is completed.

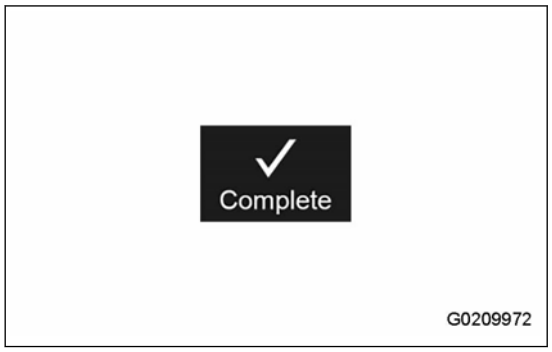

(15) List button

Tap to show or edit the truck list or material list.

(16) History button

Tap to see the loading history, etc.

(17) Settings button

Tap to configure settings.

How to Use Payload Meter Function (ICT Monitor)

The payload meter function operates even if the application runs in the background.

REMARK

If you change the application to a different one after the payload meter function starts measurement, the payload meter function operates in the background. The buzzer can unexpectedly operate when loaded to an unexpected weight. When you change the application to a different one, tap the loading complete button or tap the loading pause button to stop the payload meter function.

Change Application

1. Swipe the ICT monitor from the left to the right.

   REMARK

   When you swipe from the left end of the monitor, swipe from the outside toward the inside of the screen. When you swipe across the screen boundary, the display changes to a thumbnail screen.

G0230426

2. Tap the payload meter screen.

   The application changes. The payload meter screen is shown on the ICT monitor.

G0228953

Select Truck and Start Measurement

1. Tap the truck selection button (1).

   The truck list is shown.

   REMARK

   If “List Select (ICT monitor)” is allocated to a lever wheel, turn the lever wheel up or down, and the truck list is shown.

2. Tap the loading target truck from the truck list (2).

   The tapped truck is selected. The truck name is shown on the truck selection button (4).

   REMARK

   - When you select the truck and start the weighing, the target payload in the truck information is applied.
   - Set the truck information in advance. For the setting, see “When You Register New Truck (3-477)” and “When You See or Edit Registered Truck Information (3-478)”.
   - If you do not select a truck or use the payload meter function to cancel a selected truck, tap the Unselect button (3).
   - If “ENTER (ICT monitor)” is allocated to a lever switch, and “List Select (ICT monitor)” is allocated to a lever wheel, turn the lever wheel and the cursor on the truck display moves in the operated direction. If you want to move the cursor continuously, continue to operate the wheel for 1 second or more. Push the “ENTER (ICT monitor)” switch when the cursor is on the truck on which you want to do the loading. The truck is selected.

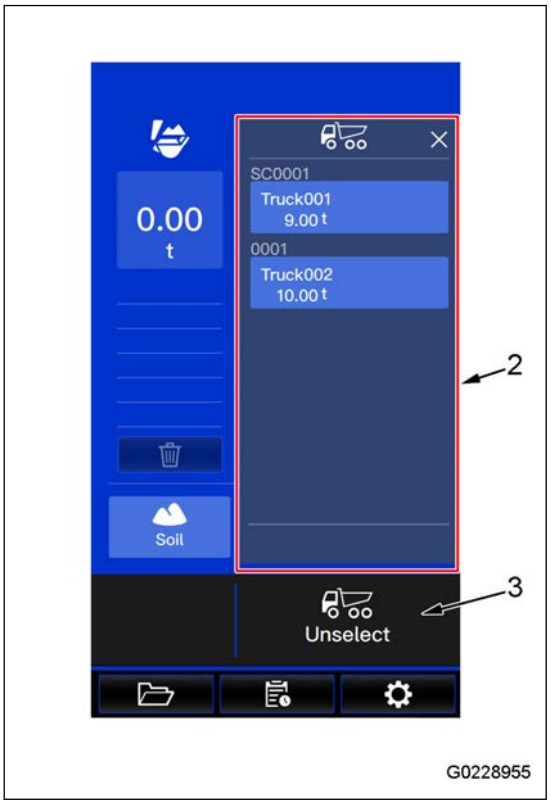

3. Tap the loading start button (5). The measurement starts.

REMARK

If “Loading start/stop” is allocated to a lever switch, push the switch to start loading.

Do Not Select Truck and Start Measurement

1. Tap the loading start button (1).

   The measurement starts.

REMARK

- When the weighing starts and a truck is not selected, Target Payload of the payload meter setting is applied.
- Set the target payload in advance. For the adjustment, see “Set Target Payload Weight (3-494)”.
- If “Loading start/stop” is allocated to a lever switch, push the switch to start loading.

Select Material

1. Tap the material selection button (2).

   The material list (3) is shown.

2. Tap the loading material from the material list (3).

   REMARK

   - “Soil” is set as the default material. To manage the volume of the payload, set the material that agrees with the loading material and select it.
   - Set the material information in advance. For how to set up, see “When You Register New Material Information (3-483)” and “When You See or Edit Registered Material Information (3-485)”.

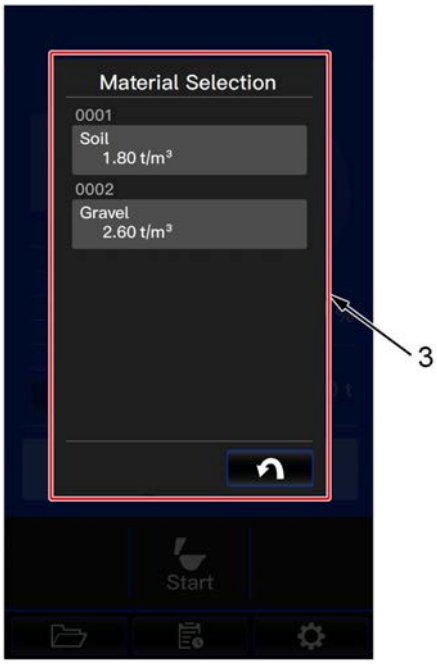

G0228958

Do Measurement and Register Payload

When you tap the loading start button and the measurement starts, a green frame is shown on the screen, and the buttons in the loading control bar change.

REMARK

Tap the loading start button before you take the soil or sand into the bucket. If you tap the loading start button after the loading operation starts, the weight cannot be correctly measured.

1. Excavate the soil or sand.

   REMARK

   If the bucket payload is 300 kg {661.5 lb} or below, the measurement does not start.

2. Make a swing and measurement.

   When the weighing is completed, the bucket icon (11) changes to green and the buzzer operates.
   Also, the weight when the soil or sand in the bucket is fully loaded into the dump truck body is shown in pale color in the loading weight graph (12).

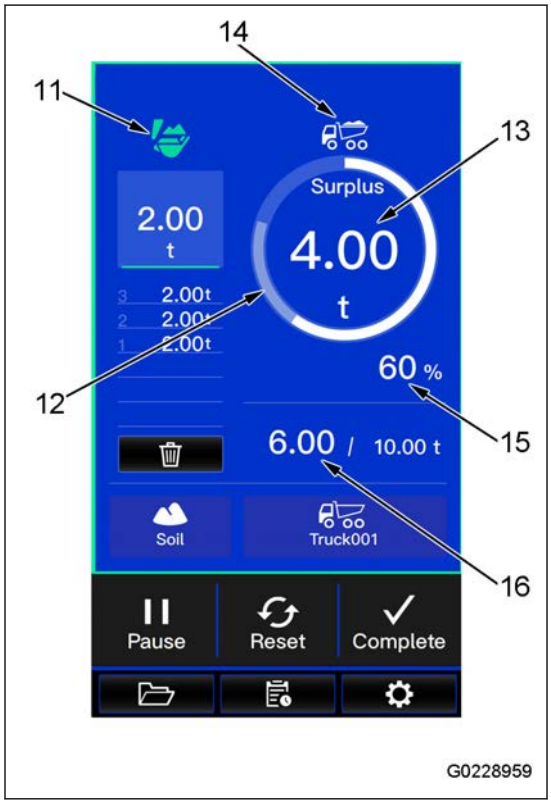

   NOTICE

   - **Weighing is to calculate the loaded weight accurately and to record it.**
   - **Do the swing operation for 45° or more as a rough guide.**
   - **If the swing angle is small, the weighing of the bucket load cannot be completed before the dumping. If the dumping is done before the weighing is completed, the precision deteriorates. Make sure that the weighing is completed before the dumping.**
   - **After you excavate, make an arm IN operation until the arm becomes vertical, and then start the swing. If you make an arm IN operation to the stroke end, or a swing operation while the boom is at highest position, the measurement precision can deteriorate. If you feel there is a problem with the measured value, do the swing operation again with the arm in an approximately vertical position, and then measure the weight again. For the detail of remeasurement, see "Measure Again at Loading (3-458)".**

   REMARK

   You can set the buzzer sound ON or OFF. For the adjustment, see "Guidance Sound Setting of ICT Monitor (Payload Application) (3-499)".

3. Make sure that the weighing is completed before you do the dumping of the soil or sand fully in the bucket into the dump truck body.

   The weight of the loaded soil or sand is reflected in the value of the remaining load to the truck payload (13). The part shown in pale color in the loading weight graph (12) changes to white.

REMARK

When you discharge the soil or sand fully in the bucket, do the dumping operation until the bucket angle (A) becomes 30 ° or more.

When the bucket angle (A) is 30 ° or less, the dumping will be in the tip-off mode.

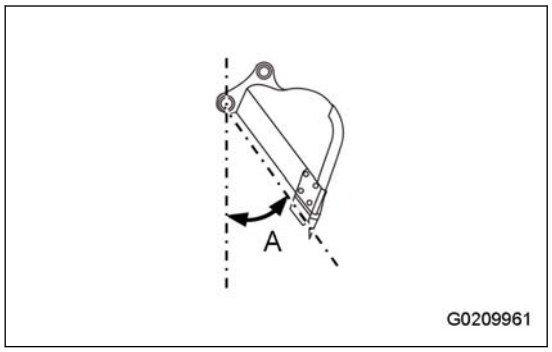

4. Do the loading operation again and again until the truck icon (14), loading percentage (15), and loading result (16) change to yellow.

5. When the target load is likely to be reached with the next loading operation, the truck Icon (14), loading percentage (15), and loading result (16) change to yellow, and the buzzer operates, and a message is shown at the top of the ICT monitor.

REMARK

You can set the buzzer sound ON or OFF. For the adjustment, see “Guidance Sound Setting of ICT Monitor (Payload Application) (3-499)”.

6. Excavate the soil or sand. Do the final loading adjustment. Do the dumping. The function to adjust the loading weight is called the tip-off function. There are 2 modes.

(a) Tip-off truck mode (when you adjust the loading weight on the truck body)

1) After you excavate roughly, make a swing to move the bucket over the dump body. When the weighing is completed, the bucket icon (11) changes to green.
2) If the truck is overloaded when the soil or sand in the bucket is fully loaded, “Overloaded (Warning)” is shown. The excessive weight is shown in red in the loading weight graph (12). Also, the buzzer operates continuously.
3) Operate the bucket and shake it to drop the soil or sand in the bucket to the dump body of the truck.

REMARK

- When the bucket angle (A) becomes 30 ° or more, it is judged that the soil or sand fully in the bucket are loaded on the truck. Do the dump operation while you keep the bucket angle 30° or less. A larger angle can cause overloading or precision deterioration of the payload meter function.
- The measurement value sways largely when the bucket is operated quickly. Read the value in a static and stable state for payload adjustment.

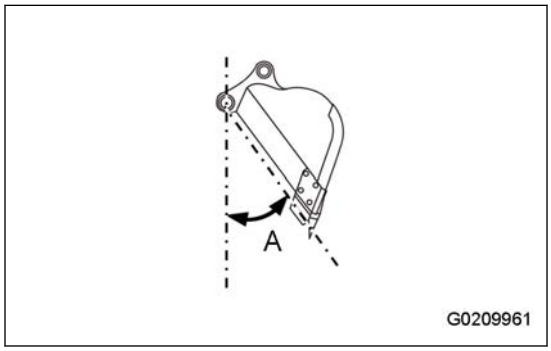

4) When the percentage of completed payload loading is reached after you shake off soil or sand, the loading weight graph (12), truck icon (14), loading percentage (15), and loading result (16) change to green. The buzzer operates, and “Payload Complete” is shown. Complete the operation to shake off the soil or sand.

5) After you complete the loading adjustment, make a swing to the excavating area.

NOTICE

When you do the dumping in the tip-off truck mode, be sure to make a swing to go back after you complete the dumping.
The discharged weight in the tip-off truck mode is reflected to the dump truck after the swing to go back. If you complete the payload adjustment before the swing to go back, the recorded payload value will have an error.

(b) Tip-off pile mode (when you adjust the bucket payload at the current location)

1) Operate the work equipment and adjust the volume of soil or sand in the bucket to make bucket payload (17) equal to or below the remaining load to the truck payload (13).

REMARK

If you make a swing operation, the weighing is completed in some cases. When you adjust in the tip-off pile mode, complete the adjustment before you make a swing operation.

2) After you complete the adjustment, do the same operation as normal loading.

7. When the payload loading completion ratio is reached, “Payload Complete” is shown.

REMARK

The payload loading completion percentage is a function that tells the completion of loading at the set ratio to the maximum payload. For the adjustment, see “Set Payload Loading Completion Ratio (3-496)”.

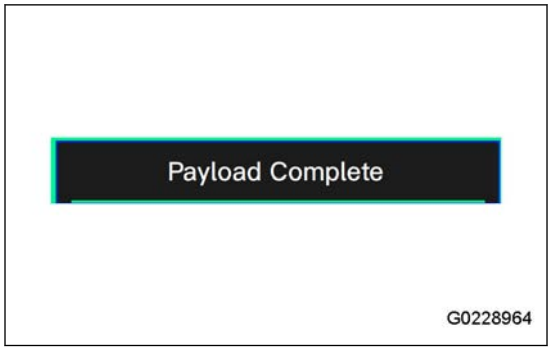

8. Tap the loading complete button (18).

REMARK

If you cannot register the loading result after the loading is completed, make a swing to the excavating area.

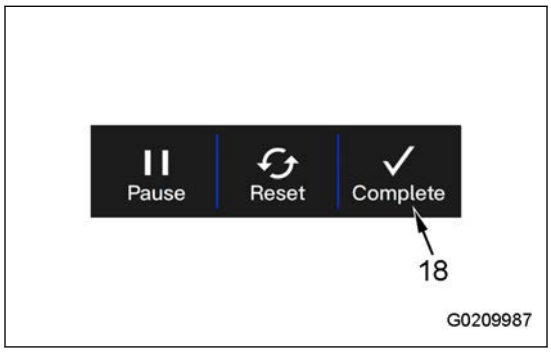

9. Tap checkmark button.

The weight of the material loaded on the truck is recorded.

REMARK

If “Payload Complete” is allocated to a lever switch, the confirmation screen is shown when the switch is pushed. When you push the same switch again, you can record the loading result.

10. When the loading result is registered, the selected truck is canceled and the payload meter function stops.
If you continue to use the payload meter function, start from “Select Truck and Start Measurement (3-448)” or “Do Not Select Truck and Start Measurement (3-449)”.

Overload at Loading

If the load is overloaded, the loading weight graph (1), truck icon (2), loading percentage (3), and loading result (4) change to red. “Overloaded” is shown and the alarm buzzer operates.

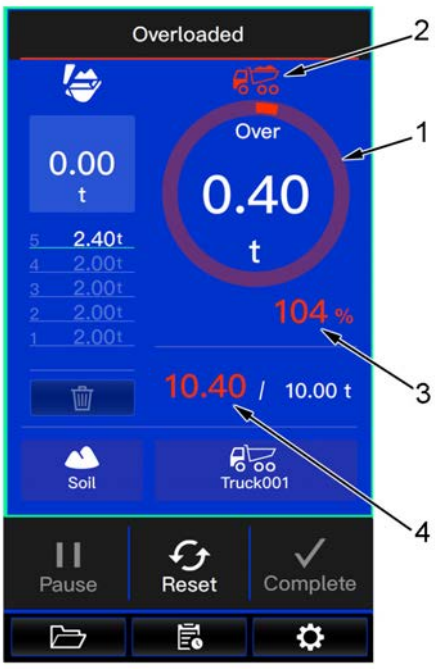

REMARK

If the load is overloaded, it will not be possible to reflect the weight to the history after the excessive soil or sand is removed from the dump body.
Use the loading completion percentage setting to prevent over-loading.
For the setting of the load complete ratio, see “Set Payload Loading Completion Ratio (3-496)”.

Assistance Work at Loading

If you do auxiliary work, such as collecting loose soil, during the loading work, the payload meter function possibly senses it by mistake and measures or accumulates the weight during the auxiliary work.

Before you do auxiliary work, pause the payload meter function.

Tap the Pause button (5) on the loading control bar. The frame of the screen becomes yellow. During the pause, weighing is not done. The dumping result is not reflected in the history.

When you start the loading operation again, be sure to tap the Restart button (6) on the loading control bar.

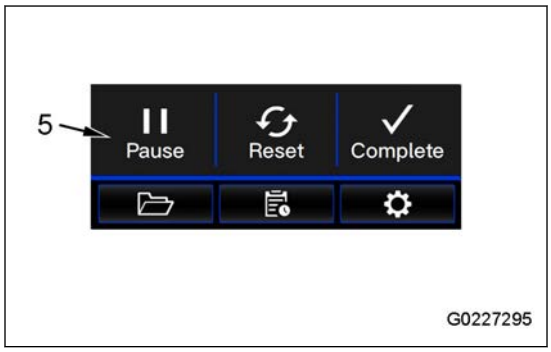

REMARK

- The Pause button (5) is shown while the payload meter function measures.
- The Restart button (6) is shown while the payload meter function is paused.
- If “Payload start/stop” is allocated to a lever switch, you can push the switch to pause loading. When “Payload start/stop” is pushed during the pause, the payload meter function starts to measure again.

Measure Again at Loading

If you think the weighing result can be incorrect or the weighing is not done even if you make a swing, do the weighing again as follows.

1. Tap Pause button (5).
2. Turn the upper structure to the excavating area while the payload meter function is stopped.
3. Tap the Restart button (6). Do not dump the soil and sand.
4. Turn the upper structure to the dump body. Make sure that the bucket load is correctly measured and the bucket icon (7) becomes green.

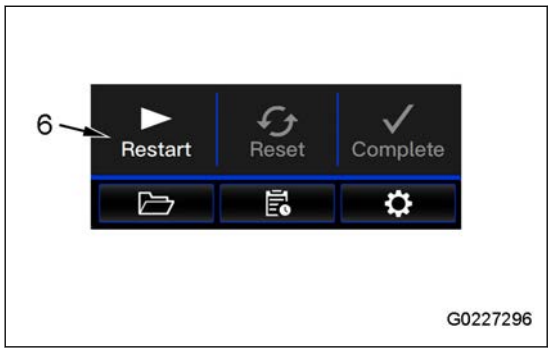

How to Clear Payload Record

How to Delete Payload History on Machine Monitor

For the machine with ICT monitor, information about the payload meter function is shown on the ICT monitor, not on the machine monitor. For machines with an ICT monitor, see “When You Clear Payload Record During Loading (3-466)”.

When You Clear Payload Record During Loading

When You Clear Payload Record of Last 1 Bucket

1. Tap the range of (1) to show Payload Meter Setting.

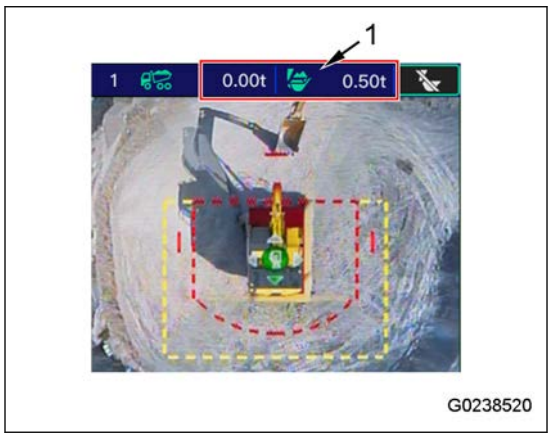

2. Tap Cancel Loading (2).

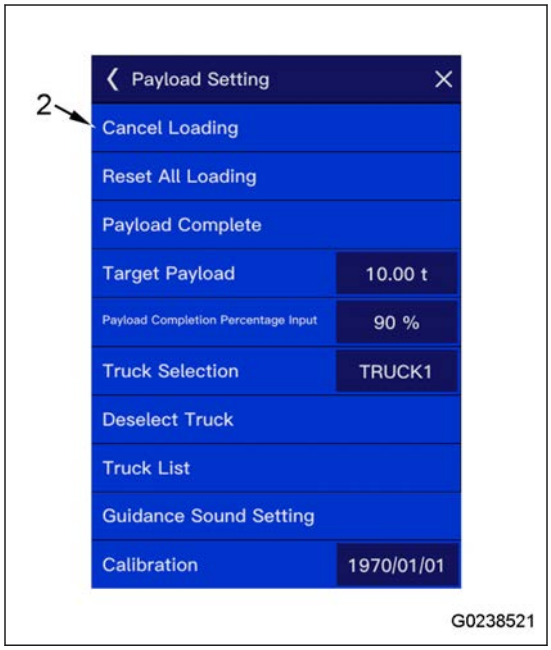

3. The confirmation screen is shown. Tap the checkmark button.
4. Make sure that the payload history of the last 1 bucket is deleted.

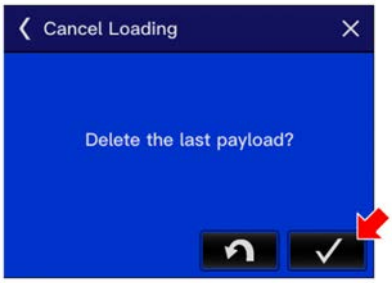

G0238522

When You Clear Payload Record of Last 1 Truck

1. Tap the range of (1) to show Payload Meter Setting.

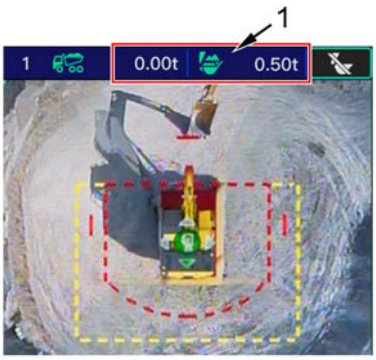

G0238520

2. Tap Reset All Loading (2).

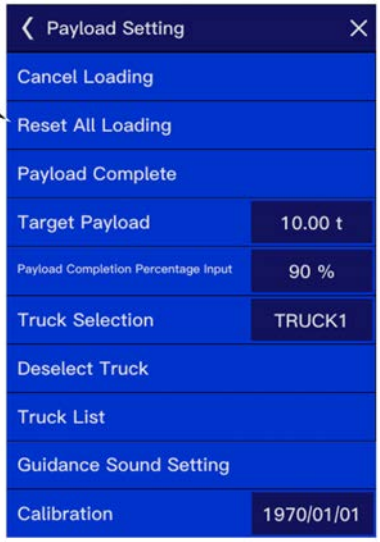

G0238523

3. The confirmation screen is shown. Tap the checkmark button.
4. The payload record for the last 1 truck is deleted and the display changes to the Stop screen.

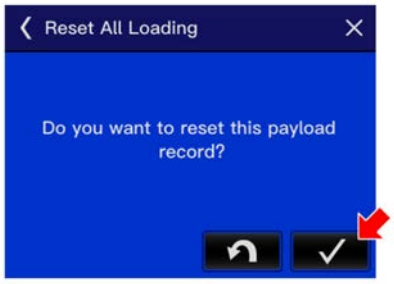

G0238524

When You Clear All Registered Payload Record

When You Delete Payload History of a Single Truck

Payload loading result histories are also deleted.

1. Tap the range of (1) to show Payload Meter Setting.

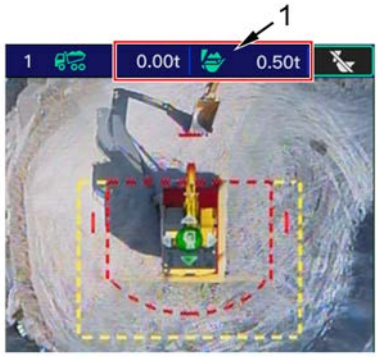

G0238520

2. Tap the truck list (2).

   At this time, set the lock lever to the LOCK position.

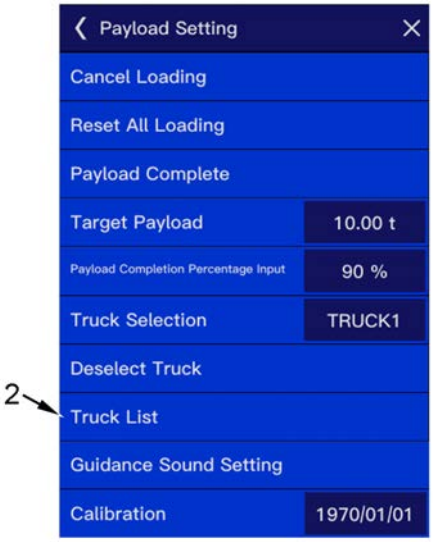

G0238525

3. Select the truck the history of which you want to delete from the truck list.

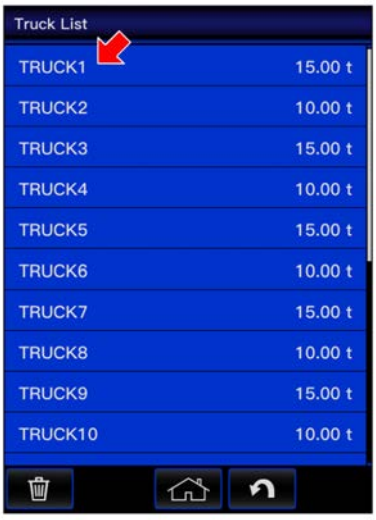

G0238526

4. Tap the Delete History button (3).

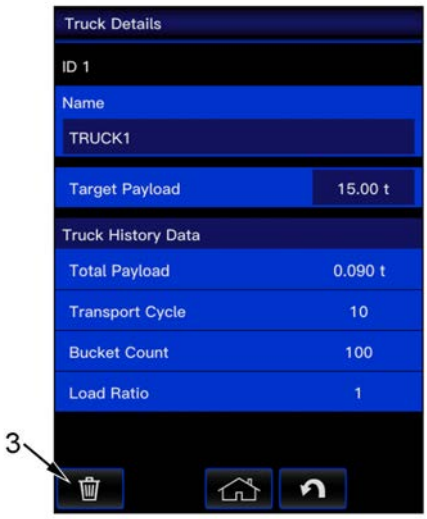

G0238527

5. The confirmation screen is shown. Tap the checkmark button.

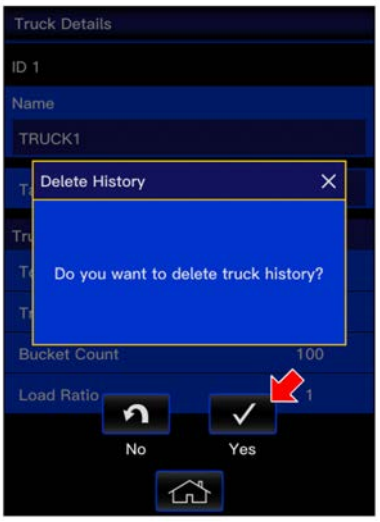

G0238528

The payload history of the selected truck is deleted.

When You Delete Payload History of All Trucks

Payload loading result records are also deleted.

1. Tap the range of (1) to show Payload Meter Setting.

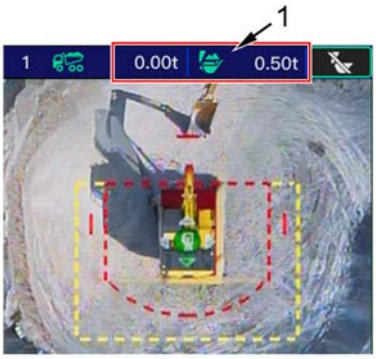

G0238520

2. Tap Truck List (2).
   At this time, set the lock lever to the LOCK position.

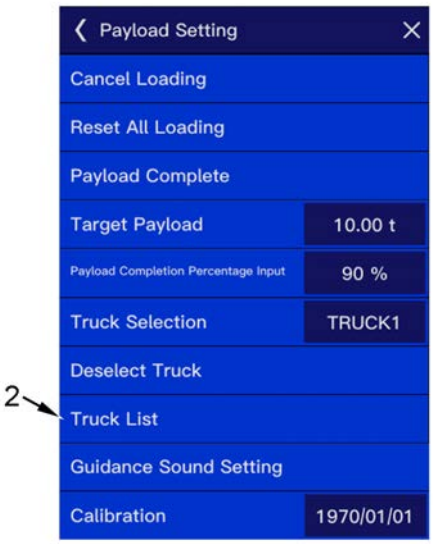

G0238525

3. Tap the Delete all History button (3).

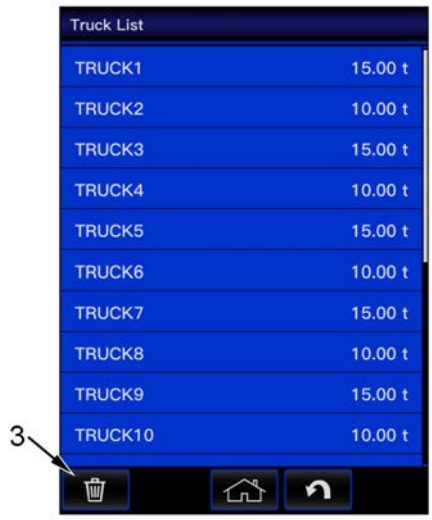

G0238529

4. The confirmation screen is shown. Tap the checkmark button.

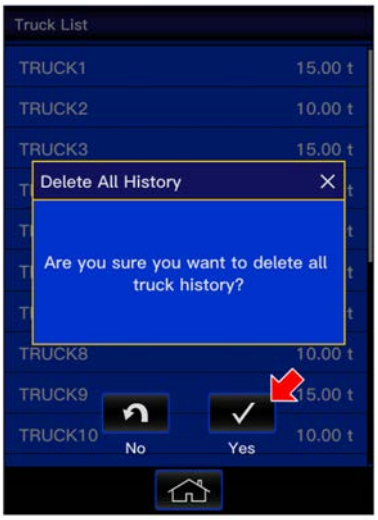

G0238530

All of the previous payload history is deleted.

How to Delete Payload History on ICT Monitor

For the machine with ICT monitor, information about the payload meter function is shown on the ICT monitor, not on the machine monitor.

For the machine without the ICT monitor, see “How to Delete Payload History on Machine Monitor (3-459)”.

When You Clear Payload Record During Loading

When You Clear Payload Record of Last 1 Bucket

1. Tap the last loading history deletion button (1).

   REMARK

   During a dumping operation of soil, the button is grayed out and cannot be tapped. Complete the dumping operation, and then tap it.

2. The confirmation screen is shown. Tap the checkmark button.

3. Make sure that the loading history of the last 1 bucket is deleted.

When You Clear Payload Record of Last 1 Truck

1. Tap the loading reset button (2).

2. The confirmation screen is shown. Tap the checkmark button.

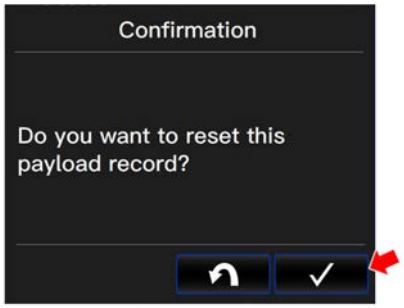

G0228972

3. The loading record for the last 1 truck is deleted and the display changes to the Stop screen.

G0242838

When You Clear All Registered Payload Record

When You Clear All Payload History

All the history of registered loading results are deleted.

1. Tap history button (3).

G0242839

2. Tap delete button.

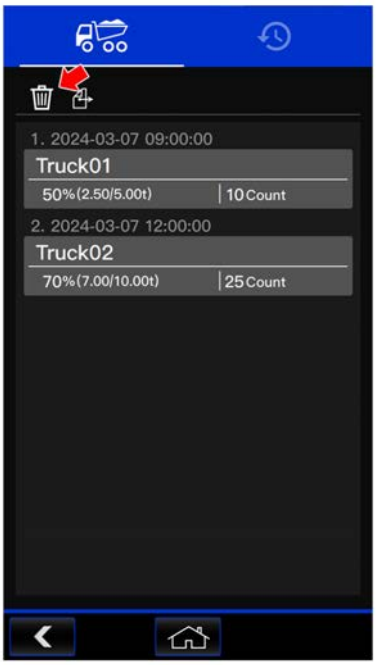

G0228975

3. The confirmation screen is shown. Tap the checkmark button.

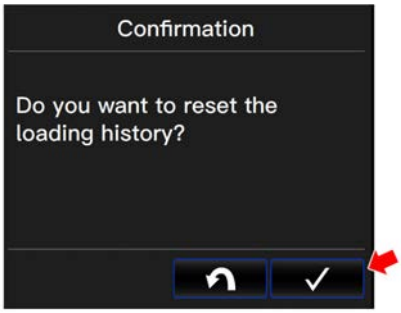

G0228976

4. All of the previous loading history is deleted.

G0224100

Clear Payload Record by 1 Truck or by 1 Material

When You Clear Payload History by 1 Truck or by 1 Material (Individual)

1. Tap list button (1).

2. Tap the truck you want to delete its history from the truck list. The display changes to the details screen.

   REMARK

   When “Material Tab” is in selection, tap the material you want to delete its history from the material list.

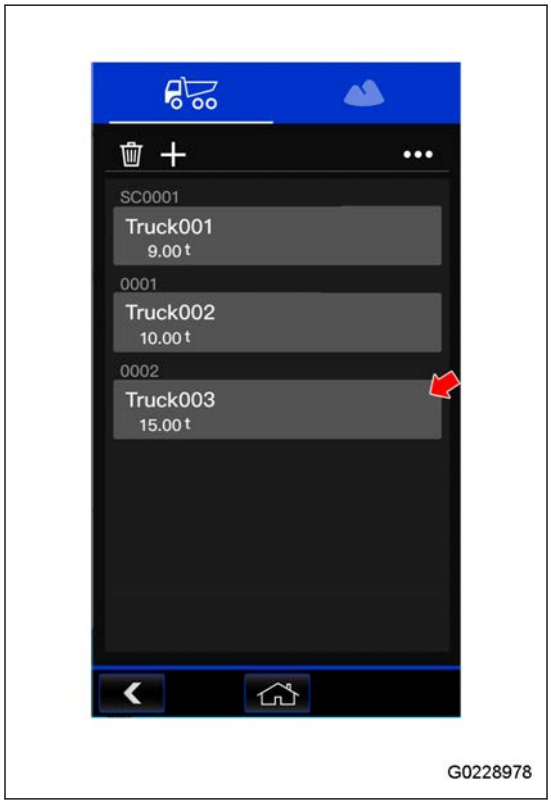

3. Tap delete button.

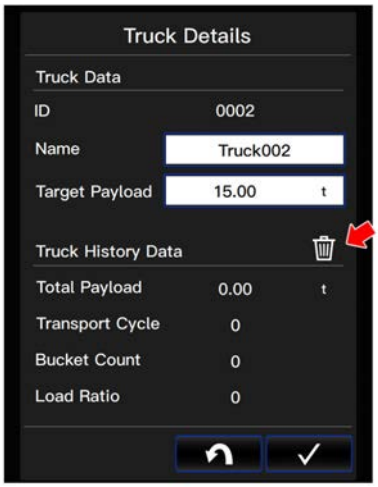

G0228979

4. The confirmation screen is shown. Tap the checkmark button.

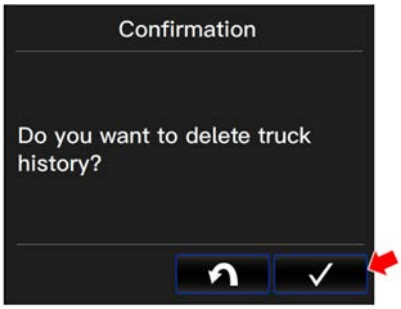

G0228980

The previous loading history of the selected truck or material is deleted.

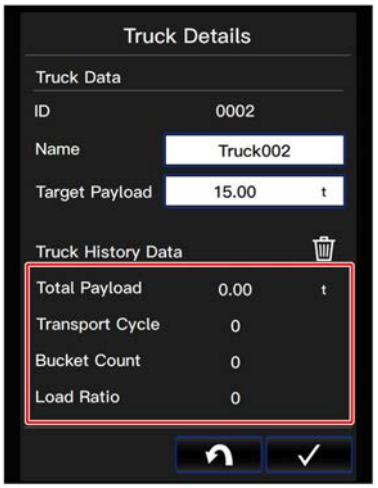

G0228981

When You Clear Payload History by 1 Truck or by 1 Material (Bulk)

1. Tap list button (1).

2. Tap details button.

   REMARK

   Even when “Material tab” is selected, tap the details button in the same procedure.

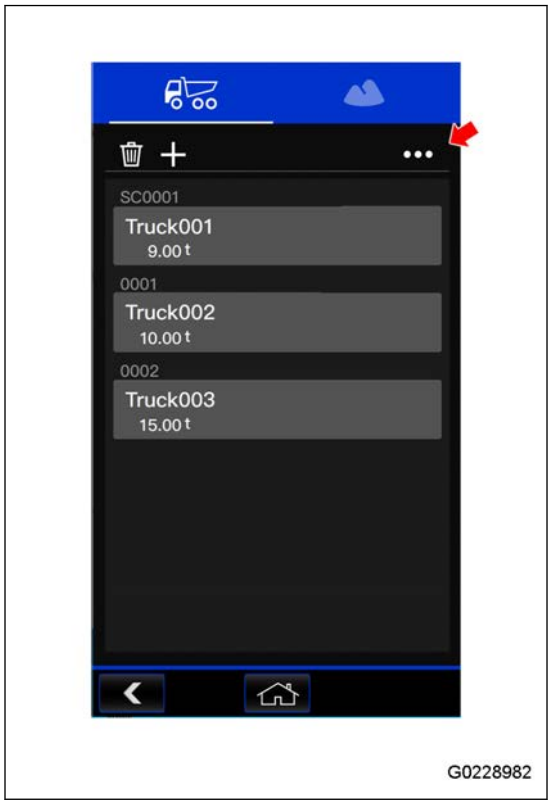

3. Tap “Delete All History Data”.

4. The confirmation screen is shown. Tap the checkmark button.

All the previous loading history for each truck or each type of material is deleted.

Truck Information

When You Display or Edit Truck Information on Machine Monitor

When the payload meter function is used on the ICT monitor, show or edit the information about the payload meter function on the ICT monitor.

For the machine with the ICT monitor, see “When You Display or Edit Truck Information on ICT Monitor (3-477)”.

When You See or Edit Registered Truck Information

1. Tap the range of (1) to show Payload Meter Setting.

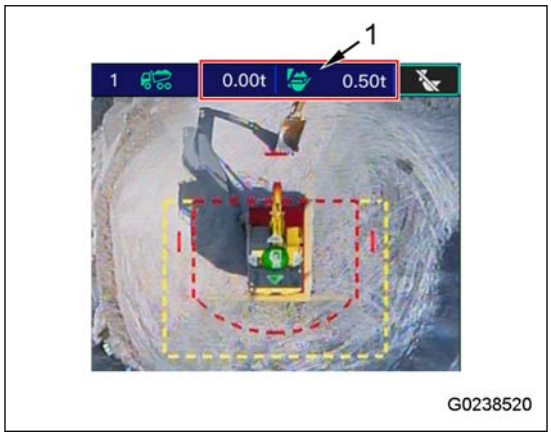

2. Tap the truck list (2).

   At this time, set the lock lever to the LOCK position.

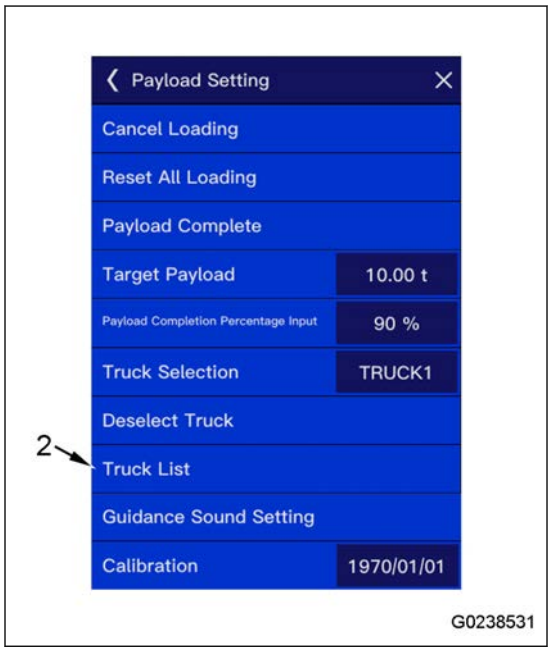

3. From the truck list, select the truck of which you want to show and edit the truck information.

REMARK

You cannot edit the truck under selection. If you need to edit it, cancel the truck selection.

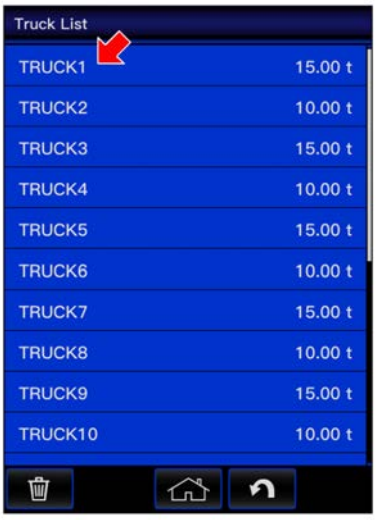

G0238526

4. The truck information is shown.

(a) ID: The ID of the truck. It is automatically allocated when it is made.

(b) Name: The name of the applicable truck that you input when you made it.

(c) Target Payload: The target payload of the applicable truck that you input when you made it.

(d) Total Payload: The sum of total payloads loaded on the applicable truck.

(e) Transport Cycle: The number of times of loading registration for the applicable truck.

(f) Bucket Count: The sum of full bucket loadings loaded on the applicable truck.

(g) Load Ratio: Shows the average value of the previous payload loading completion percentage.

REMARK

For Name (b) and Target Payload (c), you can change the registered content.

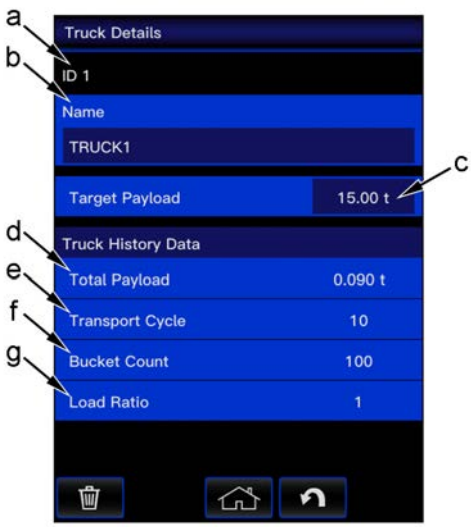

G0238533

When You Display or Edit Truck Information on ICT Monitor

When You Register New Truck

1. Tap the list button (1) to show the truck list.

2. Tap add button.

   REMARK

   If you add a truck while the Smart Construction Fleet Link is ON, the added truck is reflected on the Smart Construction Fleet.

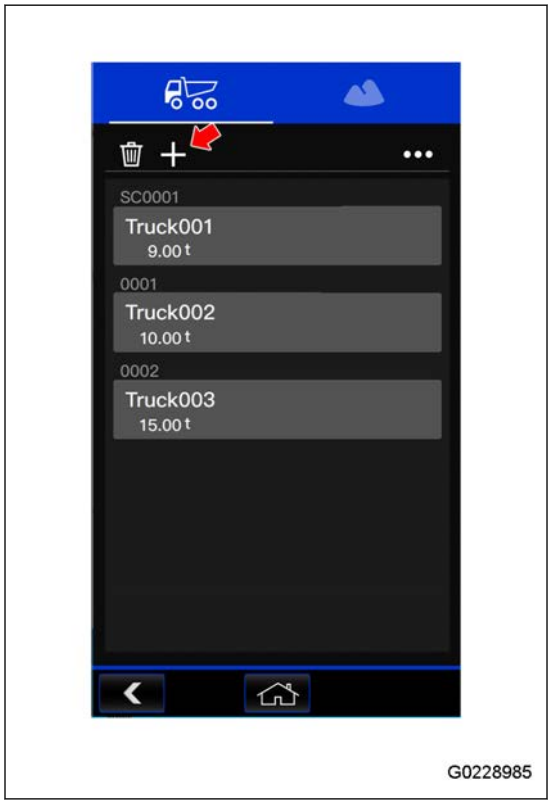

3. Enter each information for the truck to be registered. After the input is completed, tap the OK button.
   (a) Name: Truck name. You can use alphanumeric characters for input.
   (b) Target Payload: The maximum weight to be loaded on the truck. See the maximum weight to be loaded, and enter it.

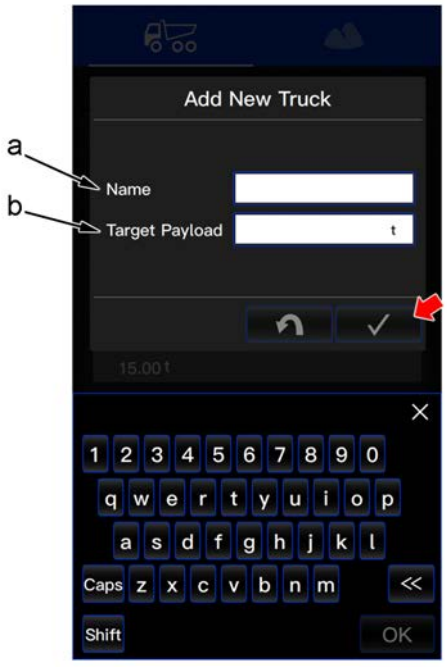

When You See or Edit Registered Truck Information

1. Tap list button (1).
   The truck list is shown.

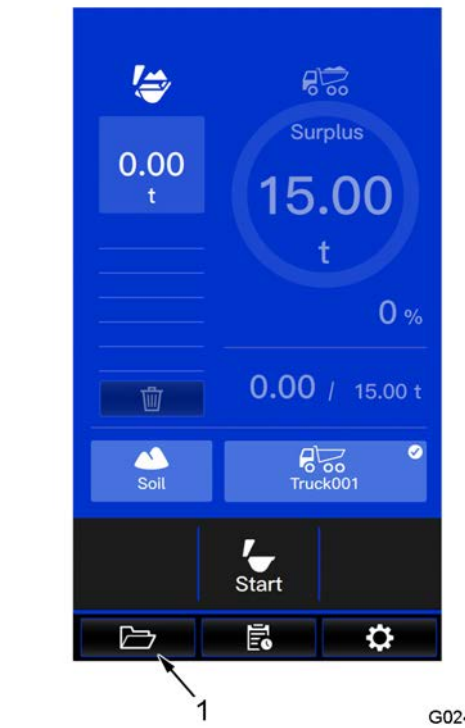

2. From the truck list, select the truck to show and edit its truck information.

REMARK

You cannot edit the truck under selection. If you want to edit it, cancel the truck selection.
While the Smart Construction Fleet Link is ON, you can edit the truck information got from the Smart Construction Fleet. The edited truck information is also reflected on the Smart Construction Fleet.

G0210022

3. The truck information screen is shown.

(a) ID: The ID of the truck. It is automatically allocated when it is registered.

(b) Name: The name entered when you registered the truck.

(c) Target Payload: The target payload that was entered when you registered the truck.

(d) Total Payload: The sum of total payloads loaded on the truck.

(e) Transport Cycle: The number of times of loading registration done for the truck.

(f) Bucket Count: The sum of full-bucket loadings loaded on the truck.

(g) Load Ratio: Shows the average value of the previous loading completion ratio.

REMARK

For Name (b) and Target Payload (c), you can change the registered content.

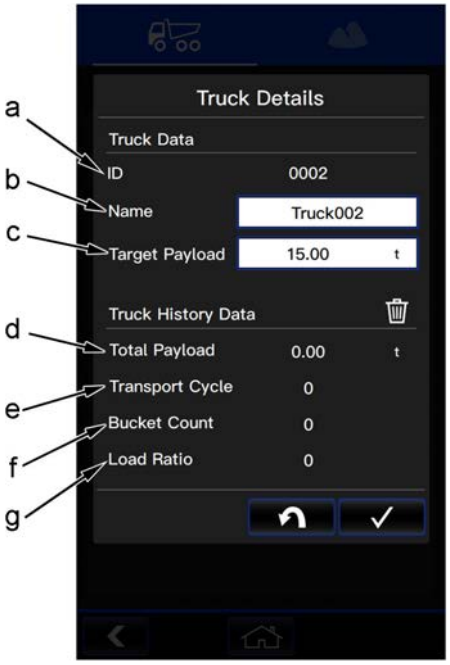

G0228987

When You Delete Registered Truck Information

1. Tap list button (1).

   The truck list is shown.

2. Tap delete button.

   REMARK

   You cannot delete the truck under selection. If you want to delete it, cancel the truck selection.
   While the Smart Construction Fleet Link is ON, you can delete the truck information got from the Smart Construction Fleet. The deleted truck information is also deleted from the Smart Construction Fleet.

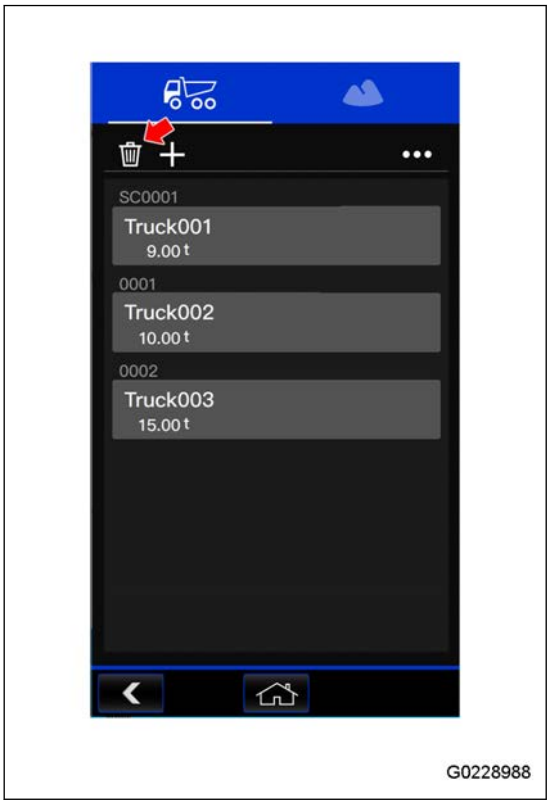

3. Select all the trucks from which you want to delete truck information. Tap the checkmark button.

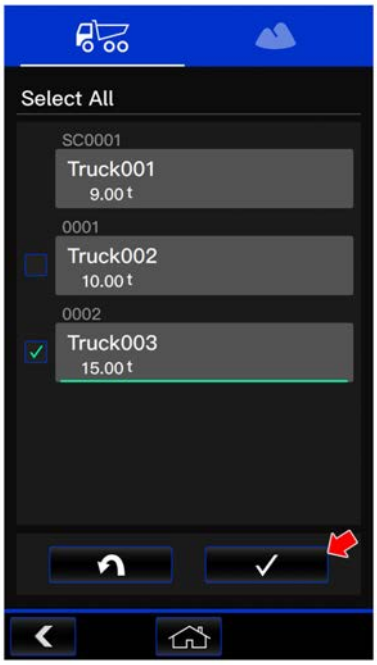

G0228989

4. The confirmation screen is shown. Tap the checkmark button.

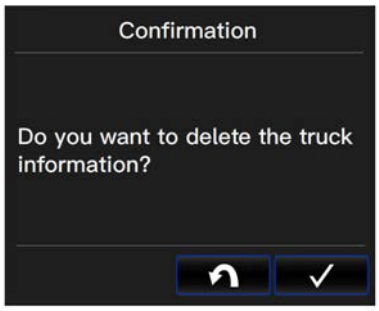

G0228990

The selected trucks are deleted.

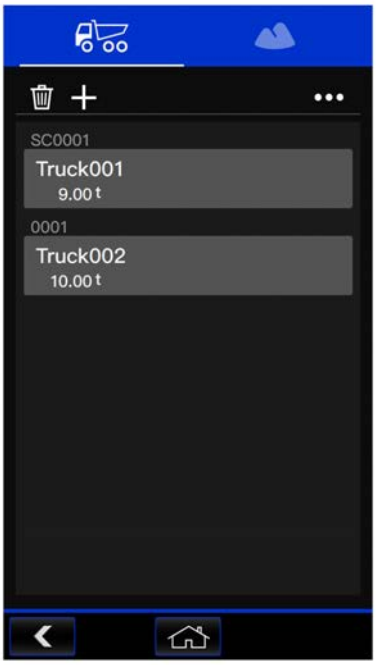

G0228991

Material Information

You can set the material information only on the machine with the ICT monitor.

When You Register New Material Information

1. Tap list button (1).
   The truck list is shown.

2. Tap the material tab.

3. Tap add button.

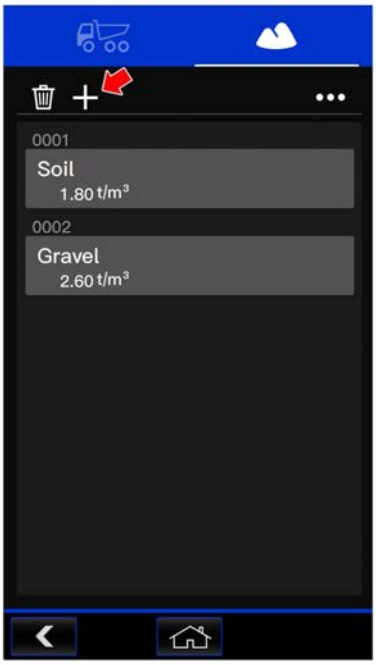

G0210026

4. Enter each information for the material to be registered. When the input is completed, tap the checkmark button.
   (a) Name: The material name. You can use alphanumeric characters for input.
   (b) Density: The density of the material. Enter the density of the material to be registered.

G0228993

When You See or Edit Registered Material Information

1. Tap list button (1).
   The truck list is shown.

2. Tap the material tab.

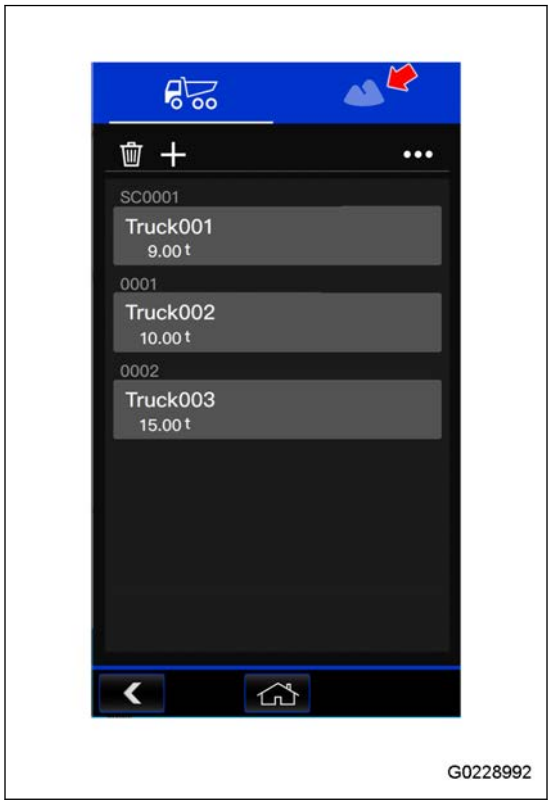

3. Select the material to see or edit Material Datails from the material list.

G0210028

4. Material Datails is shown.
   (a) ID: The ID of the material. It is automatically allocated when it is registered.
   (b) Name: The name entered when you registered the material.
   (c) Density: The density entered when you registered the material.
   (d) Total Weight: The sum of the total weight of all the material of that type loaded on the truck before.
   (e) Total Volume: The sum of the total volume of all the material of that type loaded on the truck before.

   REMARK
   - For Name (b) and Density (c), you can change the registered content.
   - The volume shows the value calculated from the setting values of Density and Total Weight.

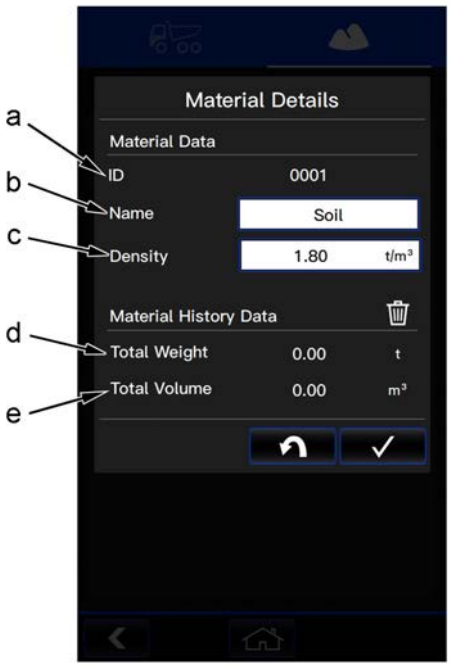

G0228994

When You Delete Registered Material Information

1. Tap list button (1).
   The truck list is shown.

2. Tap the material tab.

3. Tap delete button.

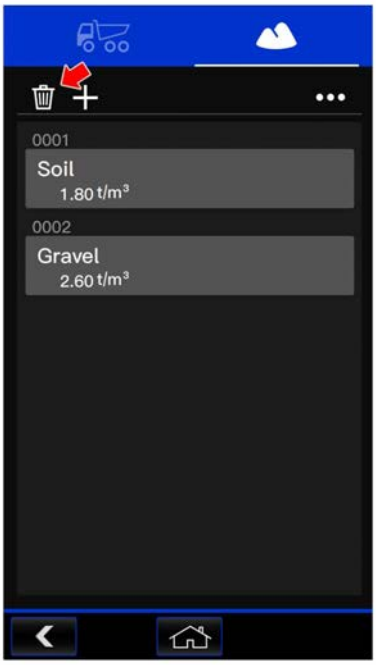

G0224113

4. Select all the materials from which you want to delete material information. After the selection, tap the checkmark button.

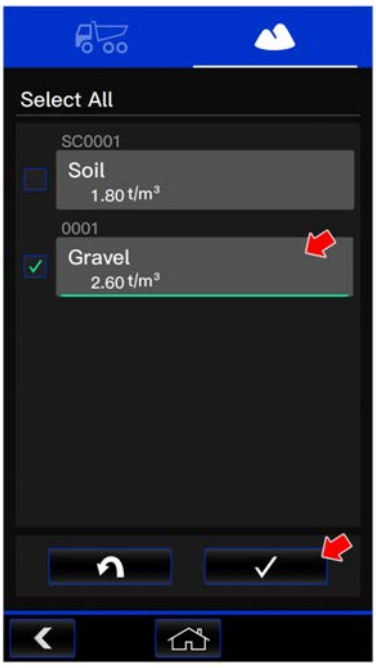

G0228995

5. The confirmation screen is shown. Tap the checkmark button.

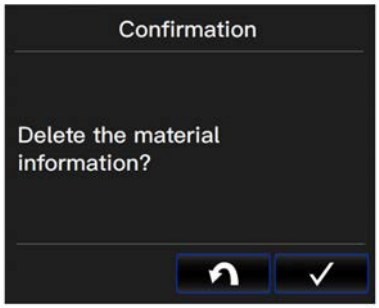

G0228996

The selected material is deleted.

G0224116

Other Setting

Other Settings (Machine Monitor)

Set Target Payload Weight

When payload meter function is used on the ICT monitor, payload meter function cannot be used on the machine monitor.

For machines with an ICT monitor, see “Set Target Payload Weight (3-494)”.

1. Tap the range of (1) to show Payload Meter Setting.

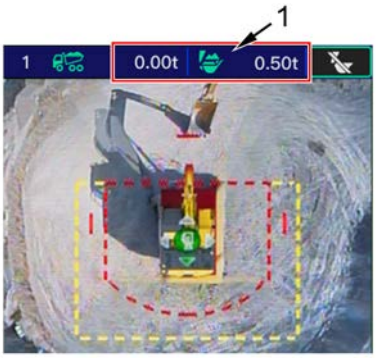

G0238520

2. Tap Target Payload (2).

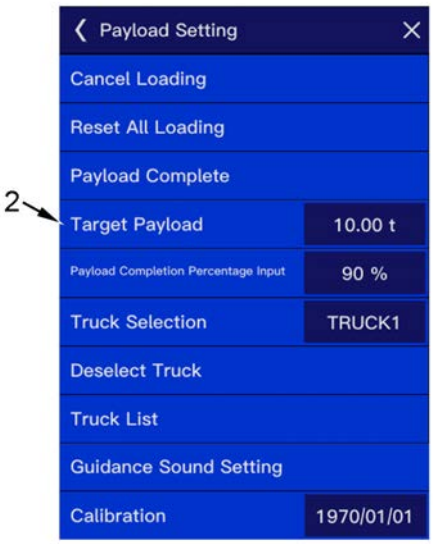

G0238534

3. Set the target payload when the weighing starts without truck selection. Enter the desired weight and tap the OK button.

G0238535

Set Payload Loading Completion Ratio

When payload meter function is used on the ICT monitor, payload meter function cannot be used on the machine monitor.

For machines with an ICT monitor, see “Set Payload Loading Completion Ratio (3-496)”.

1. Tap the range of (1) to show Payload Meter Setting.

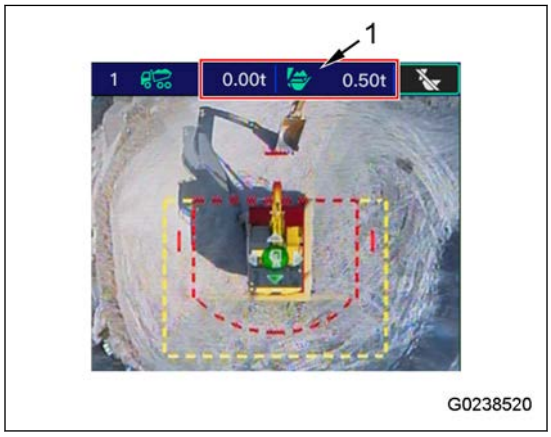

2. Tap Payload Completion Percentage Input (2).

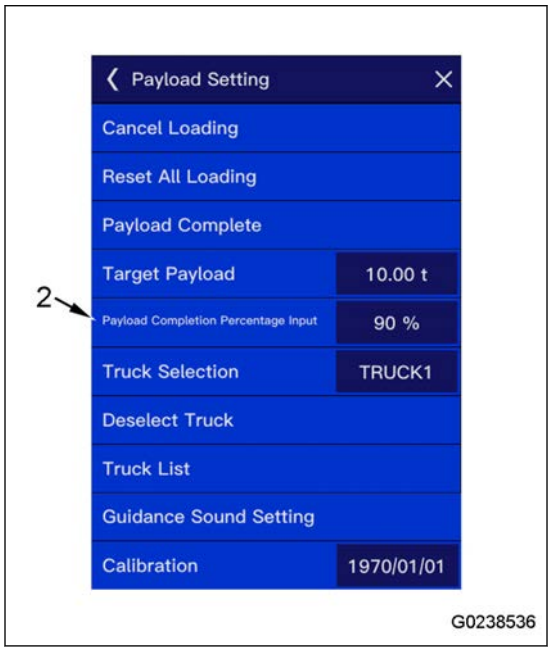

3. Set the weight range to tell you that the payload is completed. Enter the desired percentage. Tap the OK button.

   REMARK

   Set the maximum payload of the truck to around 90 % as a guideline. If you try to set to 100 %, the machine can be overloaded or display operations, as shown below, can occur.

   - The display shows an overloaded condition when the loading is 100 %.
   - The remaining loading weight does not become 0 tons after loading, even if bucket load and the remaining load were same in the display before loading.
   - After the machine is used in the tip-off truck mode, the value changes when the upper structure turns to the excavating area, and an overloaded condition is shown.

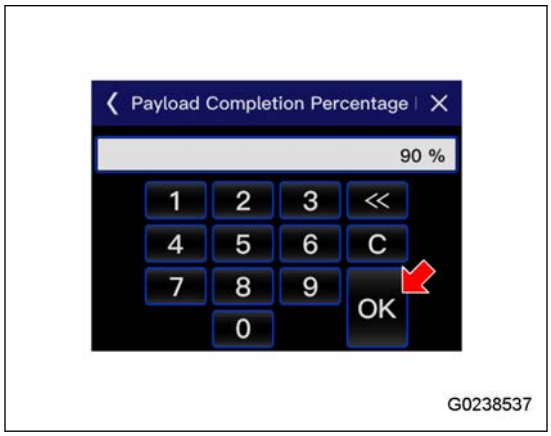

Guidance Sound Setting

When payload meter function is used on the ICT monitor, payload meter function cannot be used on the machine monitor.

For machines with an ICT monitor, see “Guidance Sound Setting of ICT Monitor (Payload Application) (3-499)”.

1. Tap the range of (1) to show Payload Meter Setting.

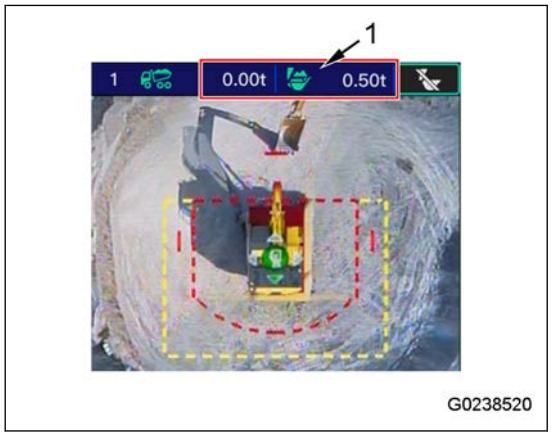

2. Tap Guidance Sound Setting (2).

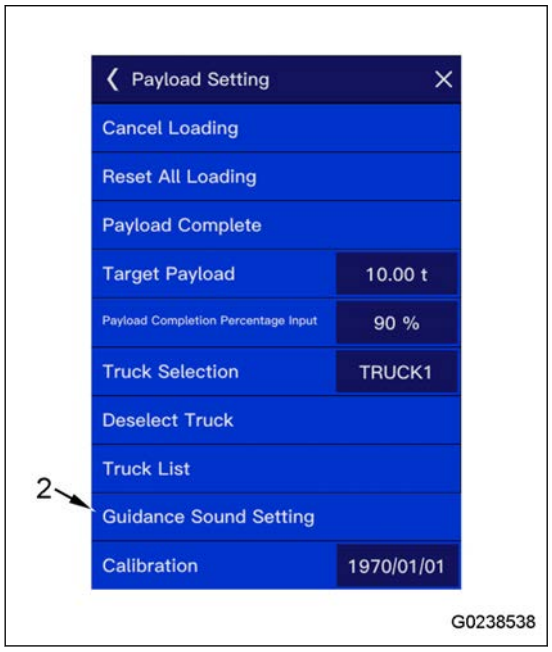

3. Set the guidance sound of payload meter function.

   You can set the ON/OFF of the guidance sound for the items that follow. Tap the toggle switch to change between ON and OFF.

   (a) Calculation Complete Notification: A buzzer sound that tells the weighing is completed

   (b) Overload Alert: An alarm sound that tells overloading will occur if all the soil and sand in the bucket is loaded onto the truck

   (c) Nearly Full Notification Sound: A buzzer sound that tells the payload loading completion percentage will be reached in the next loading operation

   (d) Payload Complete Notification: A buzzer sound that tells the set payload loading completion percentage is reached

   (e) Overload Notification: A buzzer sound that tells the truck is overloaded

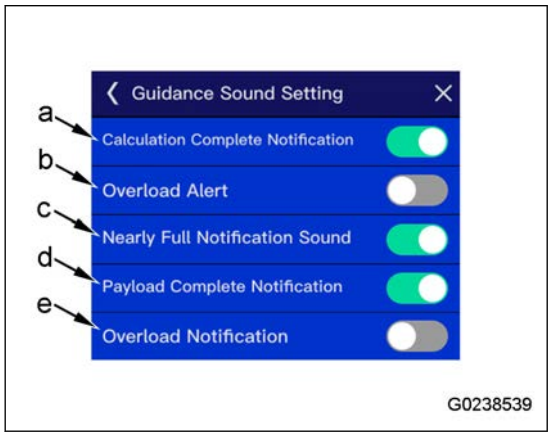

REMARK

To turn off the guidance sound for the machine with the ICT monitor, set the guidance sound setting on the machine monitor and ICT monitor to OFF.
For the guidance sound settings of the ICT monitor, see “Guidance Sound Setting of ICT Monitor (Payload Application) (3-499)”.

Display of Calibration Records

You can show the calibration record only on the machine monitor.

1. Tap the range of (1) to show Payload Meter setting.

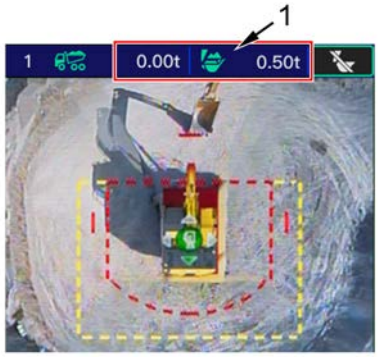

G0238520

2. Tap Calibration(2).

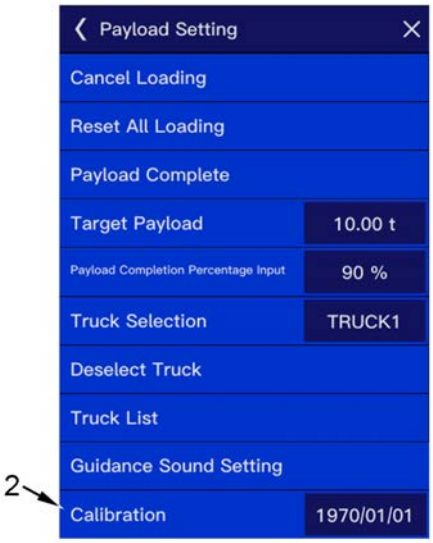

G0238540

Calibration date is shown.

Other Settings (ICT Monitor)

For the machine with ICT monitor, information about the payload meter function is shown on the ICT monitor, not on the machine monitor.

Set Target Payload Weight

1. Tap the setting button (1).

2. Tap Target Payload (2).

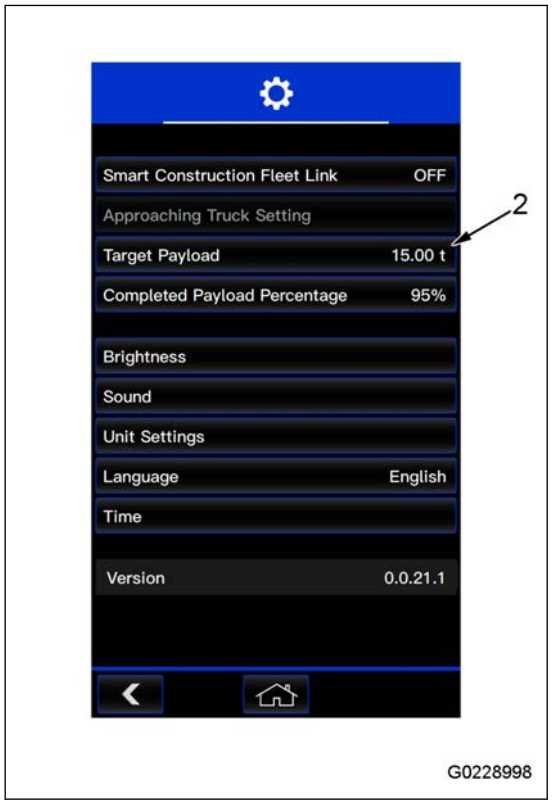

3. Set the target payload when the weighing starts without truck selection. Enter the desired weight and tap the checkmark button.

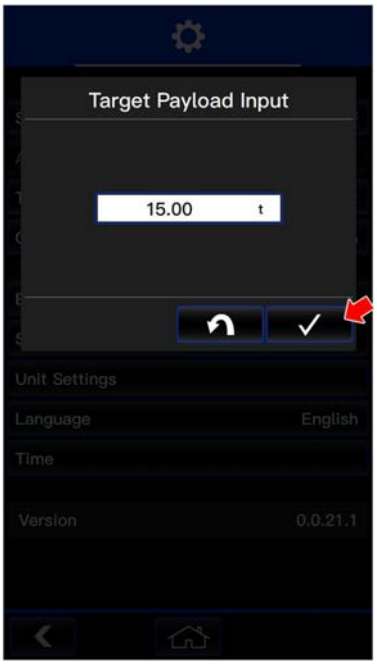

G0228999

Set Payload Loading Completion Ratio

1. Tap the setting button (1).

2. Tap Completed Payload Percentage (2).

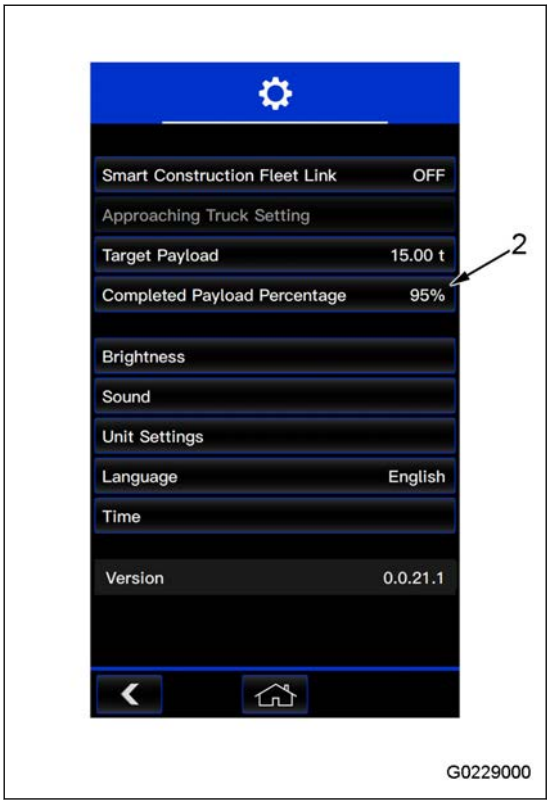

3. Set the weight range to tell you that the payload is completed. Enter the desired percentage. Tap the OK button.

   REMARK

   Set the maximum payload of the truck to around 90 % as a guideline. If you try to set to 100 %, the machine can be overloaded or display operations, as shown below, can occur.

   - The display shows an overloaded condition when the loading is 100 %.
   - The remaining loading weight does not become 0 tons after loading, even if bucket load and the remaining load were same in the display before loading.
   - After the machine is used in the tip-off truck mode, the value changes when the upper structure turns to the excavating area, and an overloaded condition is shown.

G0229001

Brightness Setting of ICT Monitor (Payload Application)

You can set the brightness of the ICT monitor.

The brightness of other active applications on the ICT monitor also changes in conjunction.

1. Tap the setting button (1).

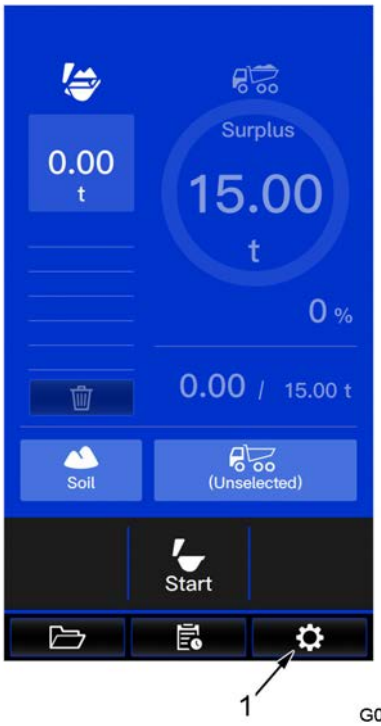

G0228997

2. Tap Brightness (2).

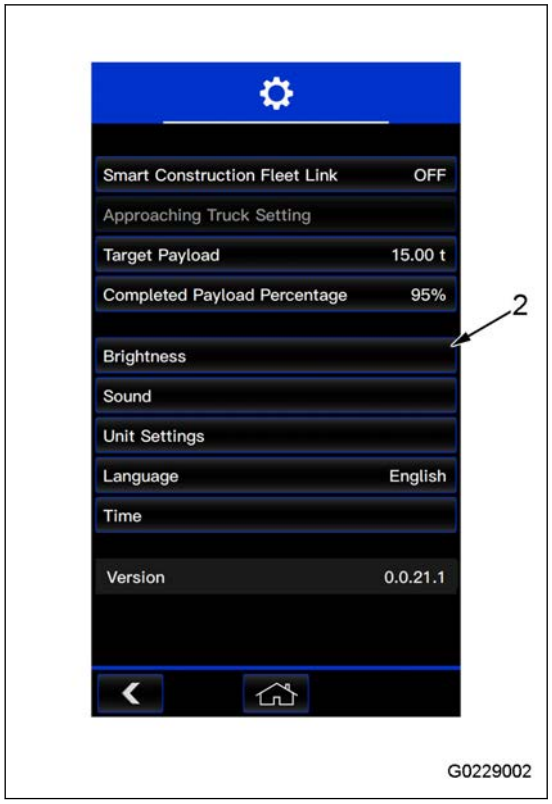

3. Set the brightness.

   Move the slider to the right to increase the brightness. Move the slider to the left to decrease the brightness.

   The detail of each item is as follows.

   (a) Day: The brightness of the ICT monitor in day mode can be adjusted.

   (b) Night: The brightness of the ICT monitor in night mode can be adjusted.

   REMARK

   You can change the day mode and the night mode with the monitor brightness selector switch. For the monitor brightness selector switch, see “Monitor Brightness Selector Switch (3-133)”.

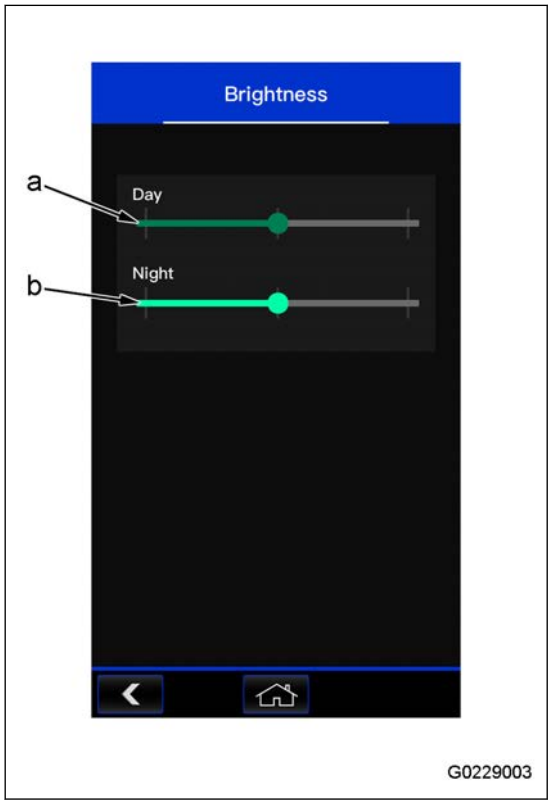

Guidance Sound Setting of ICT Monitor (Payload Application)

1. Tap the setting button (1).

2. Tap Sound (2).

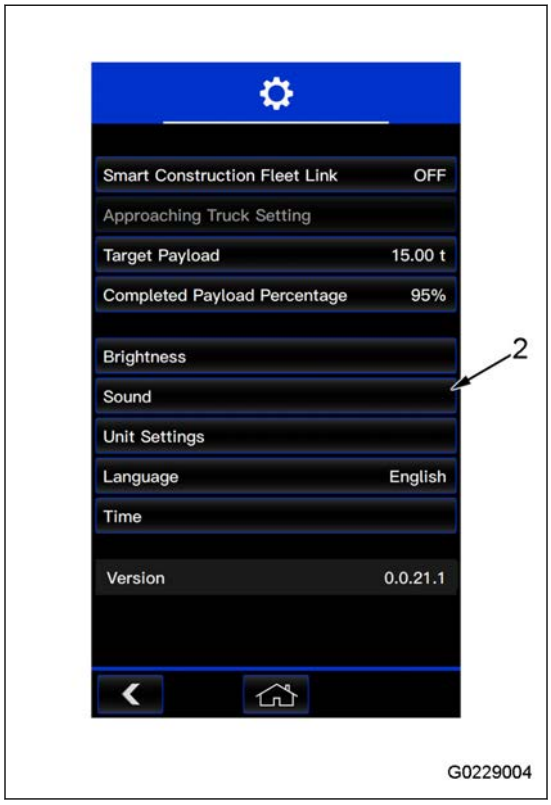

3. Set the guidance sound of the payload meter function.

   You can set the ON/OFF of the guidance sound for the items that follow. Tap the toggle switch to change between ON/OFF.

   (a) Calculation Complete Notification: Buzzer sound that tells the weighing is completed

   (b) Overload Alert: If all the soil and sand in the bucket is loaded on the truck, warning sound that tells overloading will occur

   (c) Nearly Full Notification Sound: Buzzer sound that tells the loading completion ratio will be reached in the next loading operation

   (d) Payload Complete Notification: Buzzer sound that tells the set loading completion ratio is reached

   (e) Overload Notification: Buzzer sound that tells the truck is overloaded

   The item below allows you to set the guidance sound volume. Move the slider to the right to increase the volume. Move the slider to the left to decrease the volume.

   (f) Volume: Volume of warning and buzzer sounds

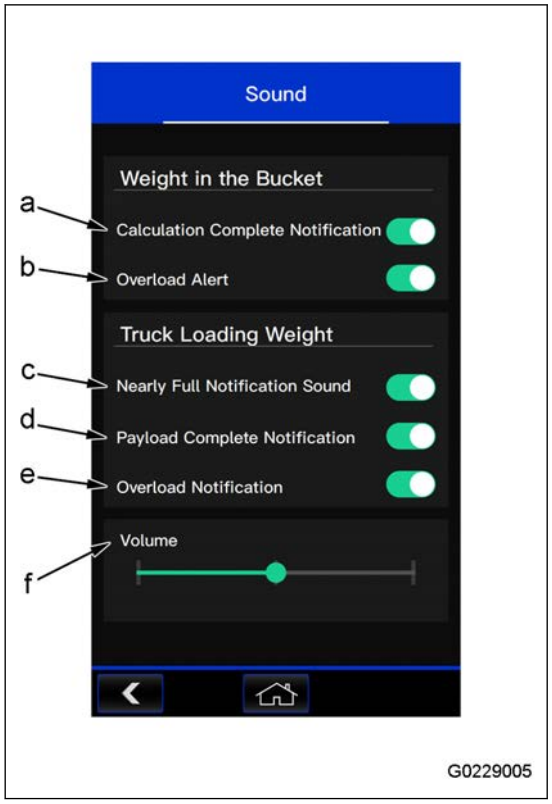

Unit Setting of ICT Monitor (Payload Application)

The unit shown when other functions of the machine monitor or ICT monitor are used cannot be changed with this setting.

For the unit setting of the machine monitor, see “Unit Selection (3-103)”.

For the unit setting when other functions of the ICT monitor are used, see “Unit” in the 3D Machine Control Operation and Maintenance Manual.

You can set the unit for the values shown on the ICT monitor while the payload application is used.

1. Tap the setting button (1).

2. Tap Unit Settings (2).

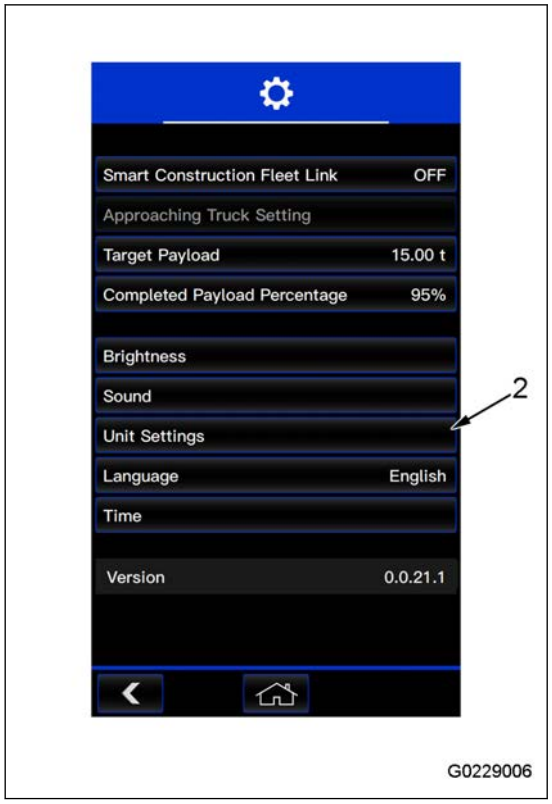

3. Tap the unit to be changed on the display. Select the unit to show from the drop-down list.

   The units can be set are as follows.

   (a) Distance: [m] [ft] [ft (US)]

   (b) Weight: [t] [kg] [lb]

   (c) Density: [kg/m^3] [t/m^3] [lb/yd^3] [lb/ft^3] [lb/ft^3 (US)]

   (d) Volumes: [m^3] [yd^3] [ft^3] [ft^3 (US)]

Language Setting of ICT Monitor (Payload Application)

The language shown when other functions of the machine monitor or ICT monitor are used cannot be changed with this setting.

For the language setting of the machine monitor, see “Language Settings (3-101)”.

For the language setting when other functions of the ICT monitor are used, see “Language and Region” in the 3D Machine Control Operation and Maintenance Manual.

You can set the language on the ICT monitor where the payload application operates.

1. Tap the setting button (1).

2. Tap Language (2).

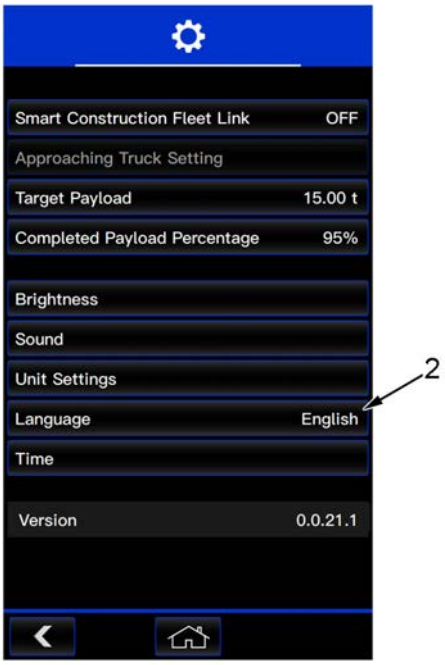

G0229008

3. Tap the language of the display from the language list.

G0229009

Time Setting of ICT Monitor (Payload Application)

The time shown when other functions of the machine monitor or ICT monitor are used cannot be changed with this setting.

For the time setting of the machine monitor, see “Clock Adjustment (3-99)”.

For the time setting when other functions of the ICT monitor are used, see “Language and Region” in the 3D Machine Control Operation and Maintenance Manual.

You can set the time shown on the ICT monitor.

1. Tap the setting button (1).

2. Tap Time (2).

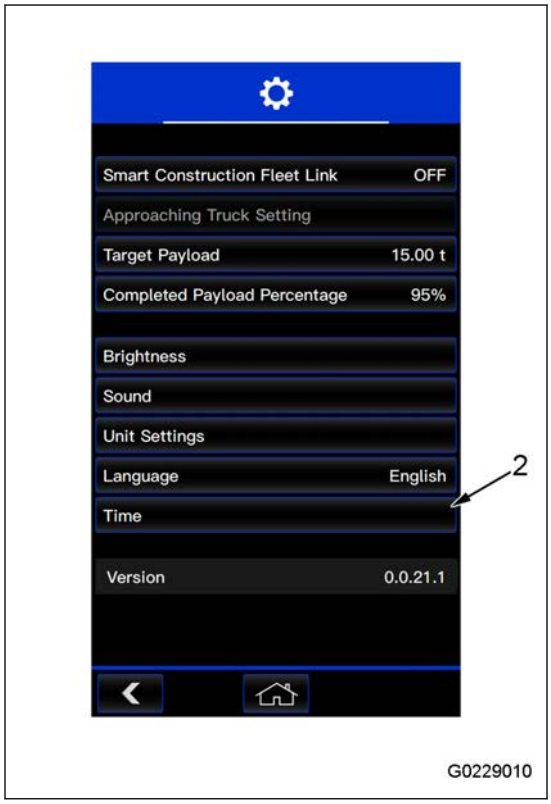

3. Set the time in one of the methods that follow.

REMARK

The date and time recognized by the ICT monitor are shown under Date and Time (3).

How to set time zone automatically (Recommended)

Tap Set Time Zone Automatically (Recommended) (4). The clock is automatically adjusted to the date and time in the area where the machine operates.

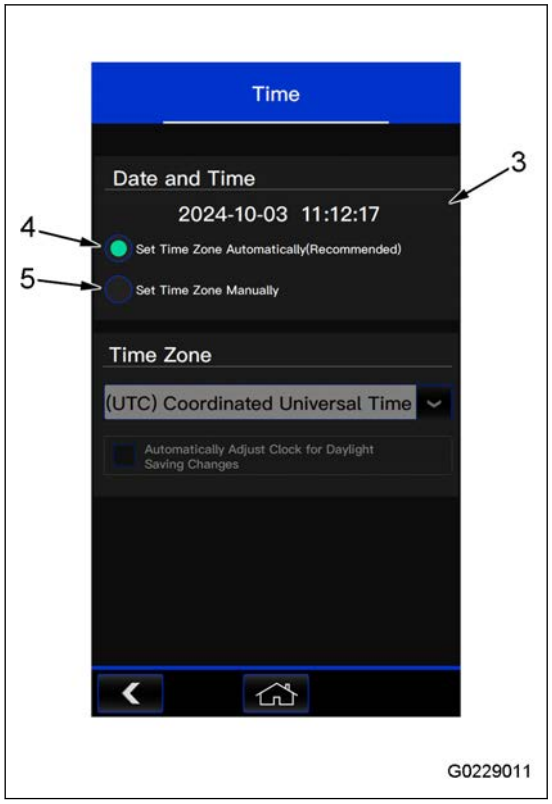

How to set time zone manually

Tap Set Time Zone Manually (5). The clock can be manually adjusted to the date and time in the area where the machine operates.

Time Zone becomes selectable. Set the desired Time Zone.

When you select the time zone, you can put a checkmark in the checkbox for “Automatically Adjust Clock for Daylight Saving Changes” for the areas where daylight saving time is used. If you want to automatically adjust for daylight saving time, put a checkmark in the checkbox (6).

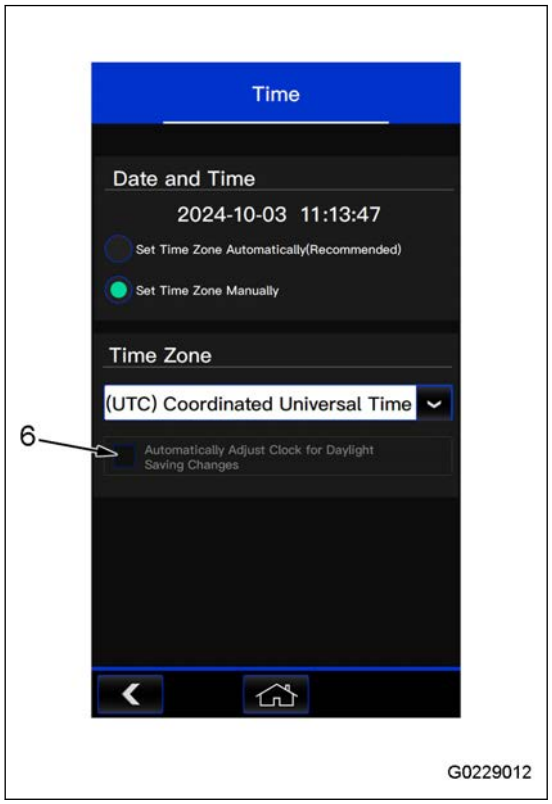

Operation Record of Payload Meter Work

For the machine with ICT monitor, the operation record of the payload meter function can be shown on the ICT monitor.

You can analyze the operation record and use it for improvement of your work.

See Operation Record of Payload Meter Work

1. Tap history button (1).

2. Tap the History tab.

3. The operation record of the payload meter work is shown.

   The detail of each item is as follows.

   (a) Total Payload: The total weight of the soil or sand loaded while the payload meter function is in operation.

   (b) Total Material Volume: The total volume of the soil or sand loaded while the payload meter function is in operation.

   (c) Total Truck Count: The total number of loaded trucks while the payload meter function is in operation.

   (d) Total Bucket Count: The total loading count while the payload meter function is in operation.

   (e) Average Fuel Consumption: The fuel consumption for 1 hour while the payload meter function is in operation.

   (f) Average Productivity: The loaded weight during 1 hour while the payload meter function is in operation.

   (g) Weight per Unit of Fuel: The loaded weight while 1 ℓ {0.26 US gal} of fuel is consumed while the payload meter function is in operation.

   (h) Total Fuel Usage: The fuel consumption while the payload meter function is in operation.

   (i) Idle Time Rate: The percentage of idling time while the payload meter function is in operation.

   (j) Average Load Ratio: The average loading percentage to the truck while the payload meter function is in operation.

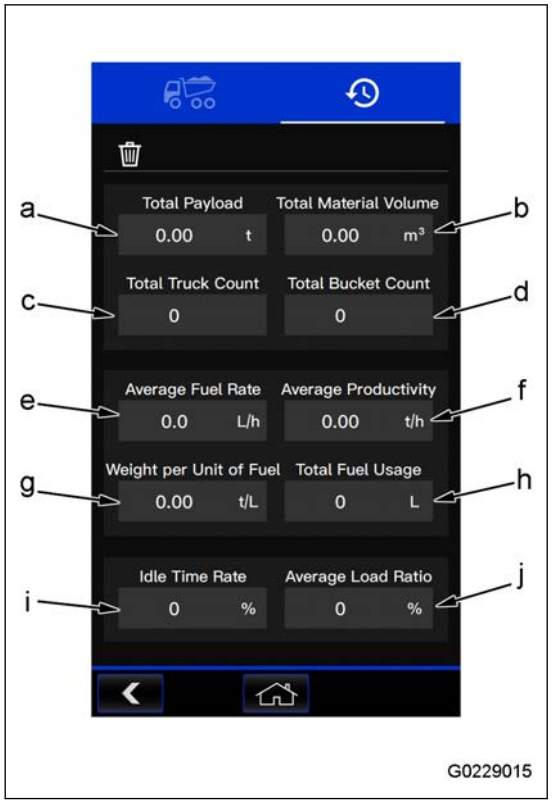

Delete Operation Record of Payload Meter Work

1. Tap history button (1).

2. Tap the History tab.

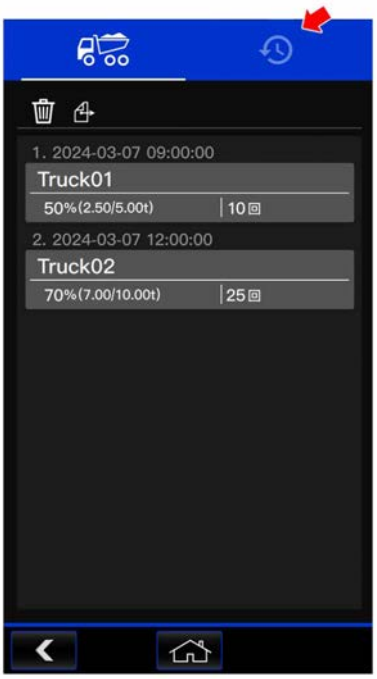

G0210049

3. Tap delete button.

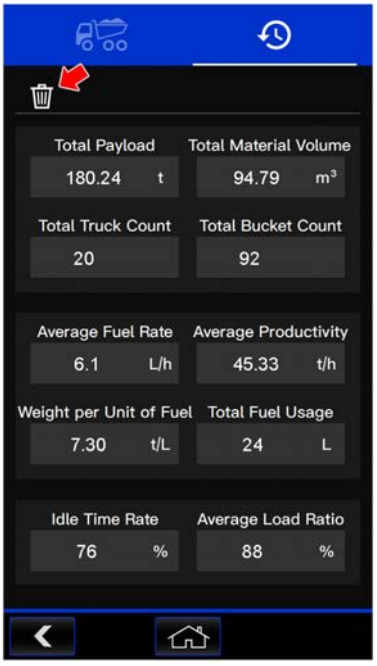

G0229016

4. The confirmation screen is shown. Tap the checkmark button.

The work record data is reset.

How to Export Operation Record of Payload Meter Work

Download the record of the payload meter operation to a USB flash drive, and you can examine it on a computer.

1. Connect a USB flash drive to the USB port (A) on the side of the ICT monitor.

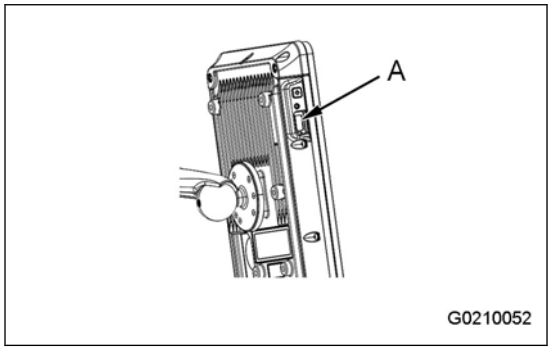

2. Tap history button (1).

3. Tap eject button.

   REMARK

   You can tap the eject button only when a USB flash drive is inserted.

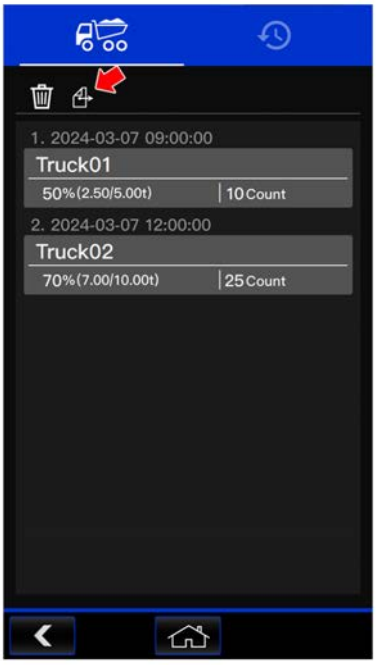

G0229019

4. The confirmation screen is shown. Tap the checkmark button.

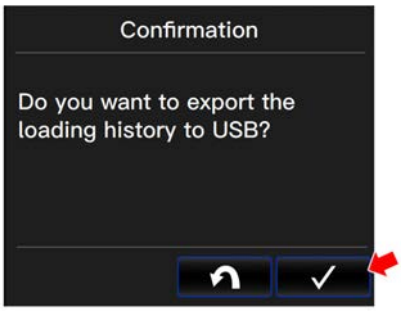

G0229020

A folder “Payload - (machine model) - (type) - (machine serial number) - (output time)” is made in the root directory of the USB flash drive. 3 data files are saved in the folder in the .csv format.

- Loading History for Each Loading Completion.csv: Loading history data for each loading registration
- Loading History for Each Material.csv: Loading history data for each material
- Loading History for Each Truck.csv: Loading history data for each truck

Cooperation with Smart Construction Fleet (ICT Monitor)

The payload meter function can do as follows in conjunction with Smart Construction Fleet.

- Register loading history to the server when a loading result is registered to a truck that is registered to Smart Construction Fleet
- Load the truck information registered to the Smart Construction Fleet and synchronize the truck list
- Send the truck information made on ICT monitor to the Smart Construction Fleet and register it to the server
- Edit and delete the truck information registered to the Smart Construction Fleet
- Show a notification when a truck registered in Smart Construction Fleet comes near

For details on Smart Construction Fleet, see the Operation and Maintenance Manual of Smart Construction Fleet.

How to Cooperate with Smart Construction Fleet

1. Tap the setting button (1).

2. Tap Smart Construction Fleet Link (2).

REMARK

When Smart Construction Fleet Link (2) is ON, the Smart Construction Fleet Link is in the setting-done state.

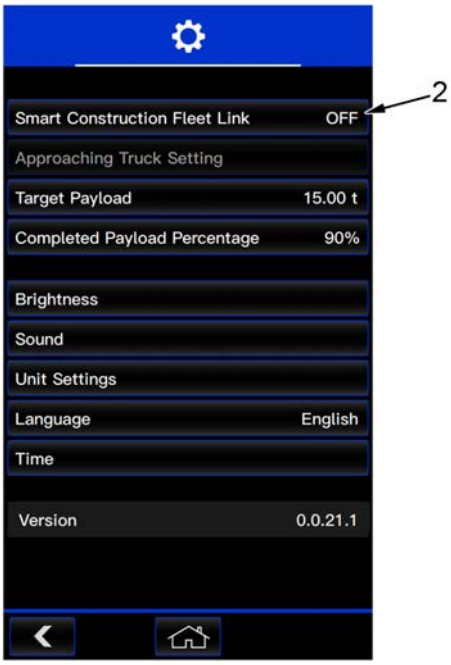

G0229021

3. The confirmation screen is shown. Tap the checkmark button.

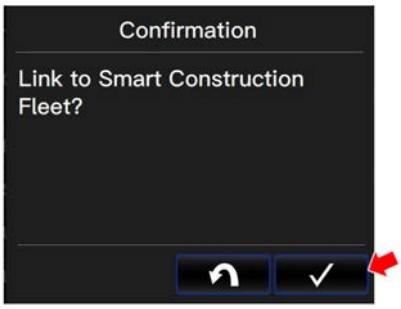

G0229022

4. When Smart Construction Fleet is connected successfully, Smart Construction Fleet Link (2) turns ON.

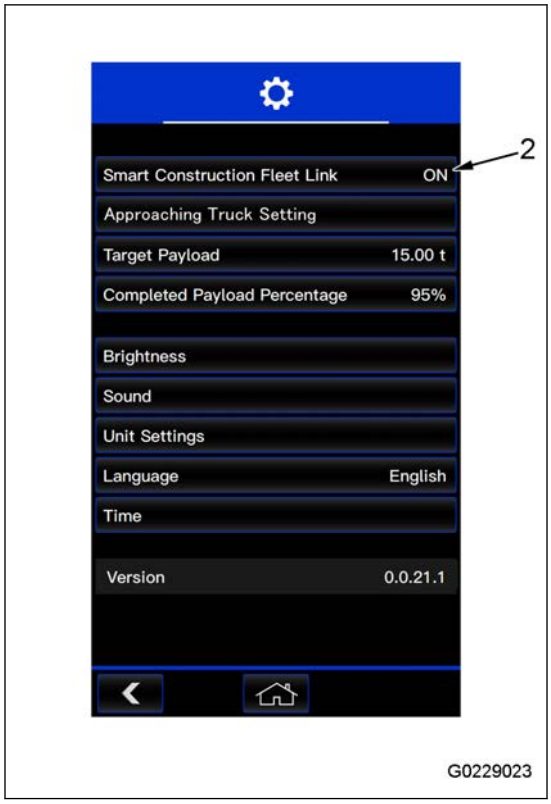

REMARK

- The truck information which is made, edited, or deleted while the Smart Construction Fleet Link is OFF will be loaded and overwritten to the truck information on the Smart Construction Fleet when the Smart Construction Fleet Link is ON.
- If the connection is not completed successfully, the confirmation screen (3) is shown. Examine if there is a problem with the network communication state or Smart Construction Fleet registration information.

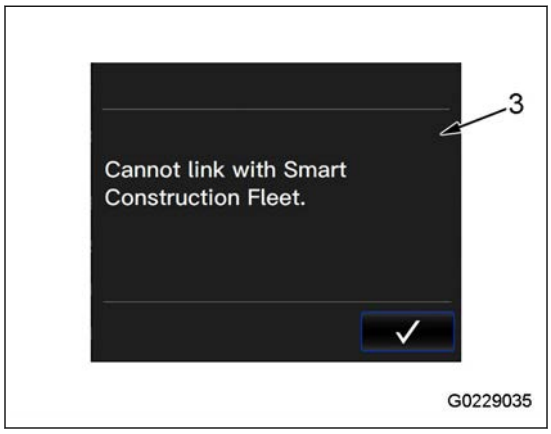

- If a truck taken from Smart Construction Fleet is selected, the connection will not be made successfully and the confirmation screen (4) is shown. Cancel the selected truck. Do the procedure again. To release selected trucks, see “Select Truck and Start Measurement (3-448)”.

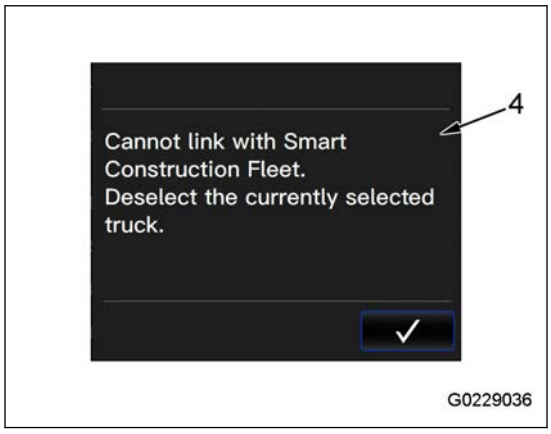

How to Cancel Cooperation with Smart Construction Fleet

1. Tap the setting button (1).

2. Tap Smart Construction Fleet Link (2).

   REMARK

   When Smart Construction Fleet Link (2) is OFF, Smart Construction Fleet Link is canceled.

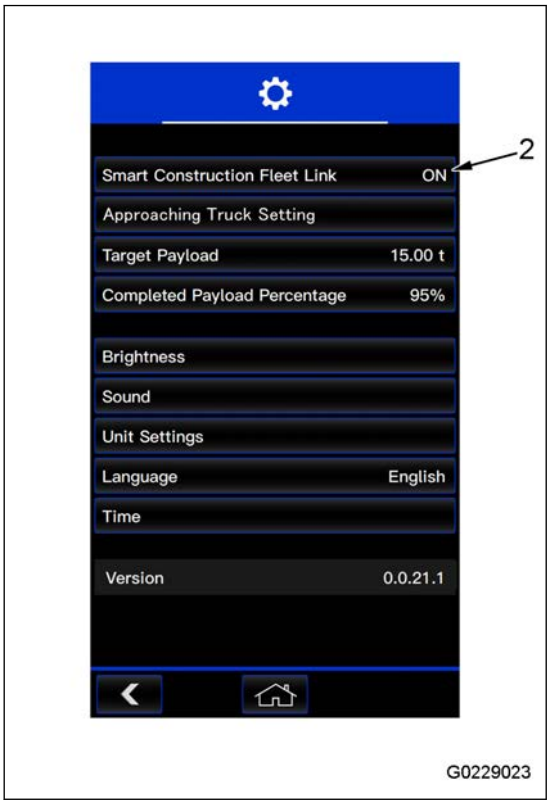

3. The confirmation screen is shown. Tap the checkmark button.

How to Update Truck Information

During connection with Smart Construction Fleet, the truck information registered in Smart Construction Fleet can be reflected on the machine.

1. Tap the list button (1) to show the truck list.

2. Tap details button.

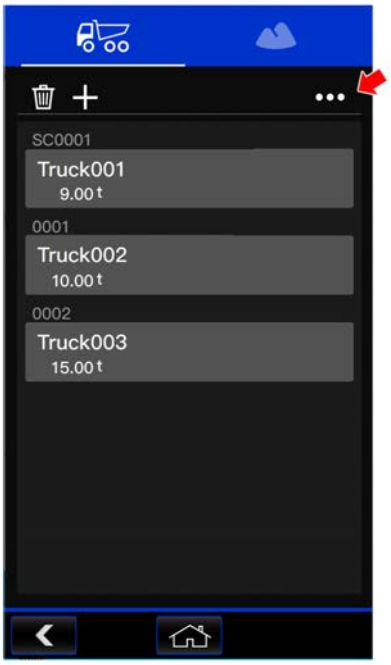

G0229038

3. Tap “Update Truck Data”.

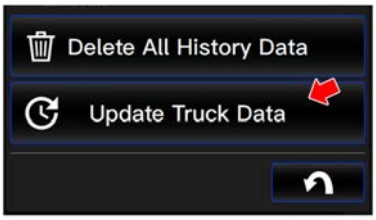

G0229039

The updating screen is shown. Stop the operation and wait.
After the updating is completed, the truck list is shown.

How to Set Proximity Truck

During connection with Smart Construction Fleet, when a truck registered in Smart Construction Fleet comes near the machine, the machine senses the proximity. The truck in proximity is shown at the top of the truck list.

1. Tap the setting button (1).

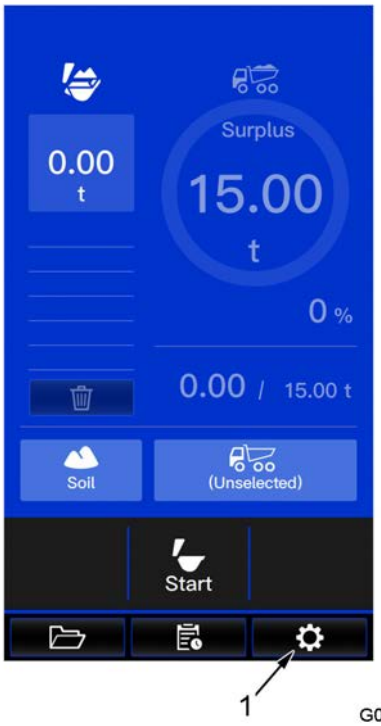

2. Tap Approaching Truck Setting (2).

   REMARK

   When Smart Construction Fleet Link (3) is OFF, Proximity Truck Setting cannot be selected. Set Smart Construction Fleet Link (3) to ON first.
   For the connection, see “How to Cooperate with Smart Construction Fleet (3-513)”.

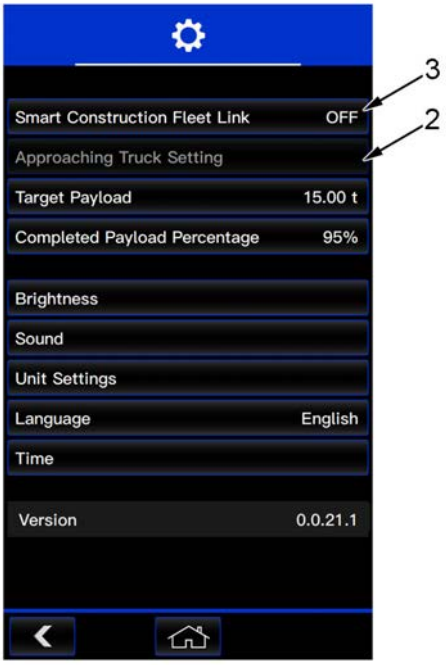

3. Do the settings for when a truck comes near.

   The detail of each item is as follows.

   (a) Acquired Frequency: Set the frequency to get position information of a truck registered to Smart Construction Fleet.

   (b) Search Range: When the distance between the machine and the truck becomes the set value or less, the machine recognizes that the truck is in proximity.

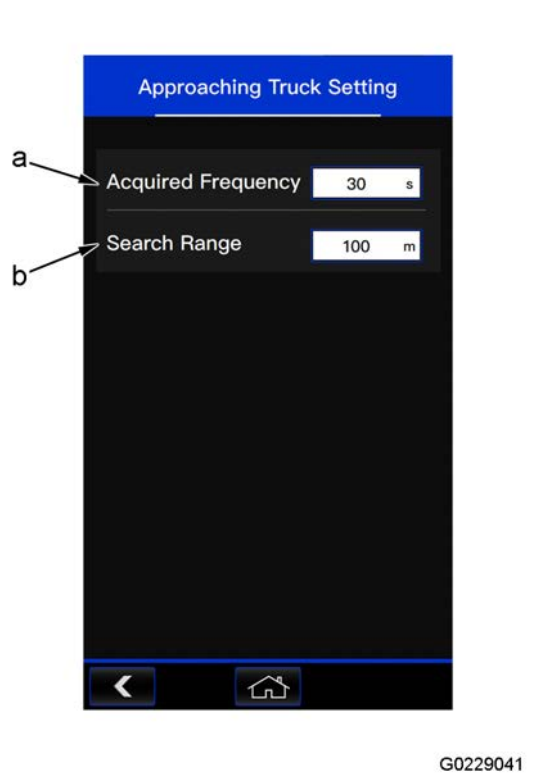

When a truck is sensed to come near, “(Truck name) Approaching” is shown. At the same time, the truck list is automatically selected, and the check icon is shown on the truck selection button.

When multiple trucks are sensed, the nearest truck is automatically selected, the truck list opens, and the truck in proximity (4) is shown at the top. The truck in proximity is shown with a green line.

REMARK

If more than one truck is in the data get range, the truck with the shortest distance to the machine is shown at the top.

Procedure for Payload Meter Function Error

If a problem is found in the payload meter function, a message is shown at the top of the screen.

If the error display is shown, park the machine as follows.

G0229043

- Park the machine on a hard and level ground.
- Select an area where there is no risk of landslides, falling rocks, or flooding.
- Lower the work equipment to the ground.

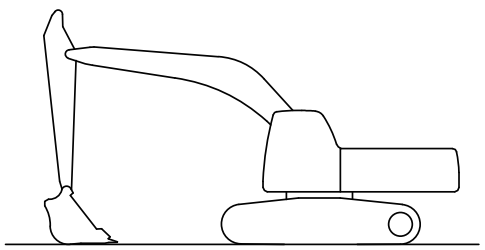

9JM01111

- When you go away from the machine, operate the operating part (g) of the lock lever (1) to set it to the LOCK position (L), and stop the engine.
- Be sure to close the operator's cab door, and apply all the locks. Remove the key not to let an unauthorized person move the machine, and keep it in the specified area.

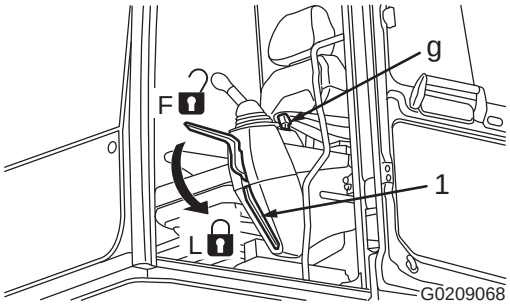

G0209068

- When you must park the machine on a slope, put chocks, set the work equipment to the downhill side, and thrust the work equipment into the ground to prevent machine movement.

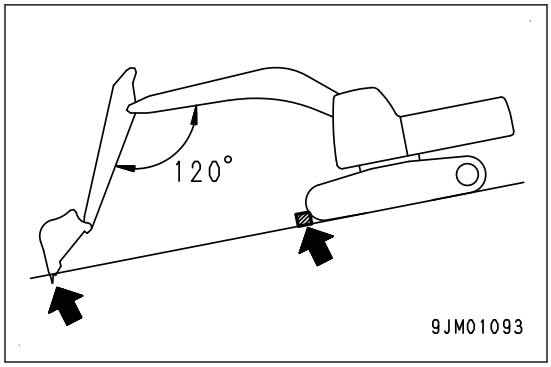

Error by Failure in the Electrical Component

- Be sure to consult your Komatsu distributor for the remedies shown with (*) in the remedy column.
- If there can be other problem or cause than the ones in the table below, consult your Komatsu distributor for repair.

ICT monitor display	Back-ground color	Payload meter function	Main causes	Remedy
Controller 2: Not Connected	Red	Not available	Defective communication between gateway function controller and ICT monitor	Examine connector connection.
				Examine, repair. (*)
Vehicle: System Error	Red	Not available	Defective communication or failure in machine system	Examine, repair. (*)

The message is shown on the message bar at the top of the screen.

Procedure for Controller 2: Not Connected

Phenomenon: Communication between the gateway function controller and ICT monitor is defective.

Stop the work, and do the procedure that follows.

Make sure that the connector behind the ICT monitor is connected securely.

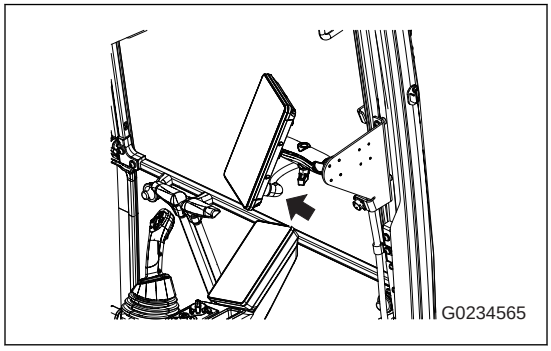

If no problem is found in the cable, there is a problem in the gateway function controller or main unit of the ICT monitor.

Make sure that the failure code is not shown on the machine monitor, and then consult your Komatsu distributor for investigation of the cause and repair.

Procedure for Vehicle: System Error

Phenomenon: A problem is found in the machine system.

Stop the work, make sure that the failure code is not shown on the machine monitor, and then consult your Komatsu distributor for investigation of the cause and repair.

Error When Message for ICT Monitor is Not Shown

Phenomenon	Check items	Reference
The ICT monitor screen is not shown.	If the payload application or 3D machine control system does not start even after the starting switch is turned to the ON position, turn the starting switch to the OFF position, and then push the reset button on the ICT monitor for 2 seconds. After that, turn the starting switch to the ON position again.	-
The power of the ICT monitor cannot be turned off.	If the payload application or 3D machine control system does not stop even after the starting switch is turned to the OFF position, push the reset button on the ICT monitor to stop the system.	-

Control Patterns Other Than Standard Control Pattern

WARNING

- **The ISO/JIS pattern is the default control pattern.**
- **When you examine the movement of the machine, be careful of the safety around the machine and operate it slowly.**

You can change the control pattern of the work equipment control lever to the desired one.

The setting is stored for each operator ID. If the control pattern is changed, the changed setting is taken over the next time the same operator logs on.

For how to change the control pattern, see “Joystick Pattern Selection (3-63)”.

ISO/JIS pattern	BH (Backhoe pattern)
G0210314	G0229126

REMARK

The currently selected control pattern is shown on the “Lever pattern display” of the machine monitor.

If a problem is found in the lever pattern setting, the icon flashes in red and the operation pattern is not shown. In that case, turn the starting switch back to the OFF position (A). Wait until the machine monitor goes off, and then operate the starting switch again.

G0210321

G0210322

Transportation

Precautions When You Transport Machine

When transporting the machine, observe all related laws and regulations, and be careful to assure safety.

When you disassemble the machine for transportation or assemble it, consult your Komatsu distributor.

In case a lifting or tying-down attachment point is broken, consult your Komatsu distributor.

Select Transportation Method

- When transporting the machine, choose the transportation method in reference to the weight and dimensions.
  Note that the weight and dimension given in “SPECIFICATIONS” (weight and dimension) may differ according to the type of track shoe or arm, or other attachments.
- Consult your Komatsu distributor for details of the procedure for transporting machines with a protective guard installed for the operator's cab.
- Consult your Komatsu distributor for handling of the handrails when transporting the machine.

Load onto and Unload from a Trailer

Precautions When You Load and Unload

WARNING

Be sure to obey the precautions that follow when you do the loading and unloading.

- **Do the work on a hard and level ground.**
- **Keep a sufficient distance from the road shoulder.**
- **Be sure to set the auto-deceleration switch to OFF (cancel). If the auto-deceleration switch is ON and you operate the machine, the machine starts suddenly in some cases.**
- **Before you do the loading and unloading, let the machine be in the state that follows.**
  - **Set the travel speed to low speed (Lo) and set the engine speed to low idle.**
  - **Do the warm-up operation until the engine's revolution becomes stable.**
  - **If the machine stop control of the object avoidance is activated and the machine suddenly stops when you do the loading and unloading, the machine can lose stability. Set the machine stop control to OFF when you do the loading and unloading.**

  To use the object avoidance safely, read these precautions and how to handle this system.

  Precautions When You Use Object Avoidance

  “When Object Avoidance Has Failure (3-352)”

  “Situations Where Object Avoidance May Not Sense Target Correctly (3-353)”

  “Situations Where the Machine May Become Unstable Because of Sudden Stop (3-358)”

  “Situations Where You May Be Unable to Evacuate Machine Because of Machine Stop Control (3-359)”

  “Situations Where You May Need to Turn Off Machine Stop Control of Object Avoidance (3-360)”

  How to Handle Object Avoidance

  “Monitor Display (3-361)”

  “Function of Object Avoidance (3-362)”

  “Monitor Display of Object Avoidance (3-365)”

  “How to Set Object Avoidance (3-367)”
- **Travel with low speed when you do the loading and unloading.**
- **Be sure to use ramps. It is dangerous to use the work equipment to do the loading and unloading.**
- **Do not change the direction on the ramps. If you change the direction, the machine can fall over. Go back to the ground from the ramps, or go back to the trailer platform and correct the direction.**
- **On the ramps, do not operate the levers other than the travel lever.**
- **Move over the line between the ramp and trailer slowly. The gravity center of the machine can suddenly move, and there is a danger that the machine falls over.**

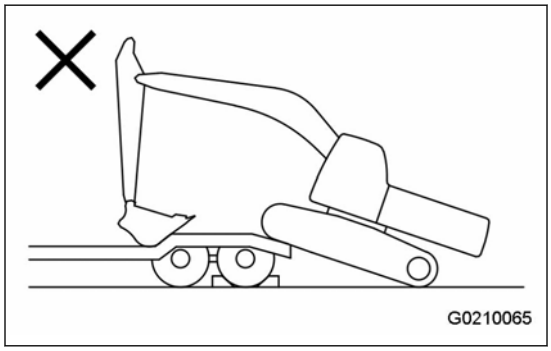

- **If it is necessary to swing the upper structure on the trailer platform, the footing does not become stable. So, be careful not to let the machine fall over. When the work equipment is installed, the machine is not stable. Slowly swing the upper structure with the work equipment pulled in.**
- **Put a signalman to give guidance not to let the machine come off the ramps. Be careful of the safety.**

- **Be sure to keep the cab door fixed at the opened state or closed state.**

Precautions for Ramps and Platform

WARNING

Be sure to obey the precautions that follow to handle the ramps and platform.

- **Select ramps with allowable width, length, thickness, and strength. Be sure to fix the ramps to the trailer to keep its slope at 15 ° or less.**
- **When piled soil is used for the platform, compact the piled soil fully to prevent breakage of slope face.**
- **Before you do the loading or unloading operation, clean the undercarriage of the machine and ramps to prevent skid. If oil, mud, ice, or snow attaches around the undercarriage of the machine or on the ramps, the machine can slip easily, and it is dangerous.**

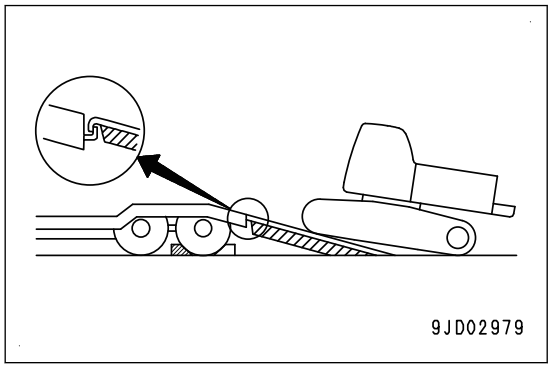

- **Do not open or close the cab door on the ramps or platform. There is a danger that door opens and closes suddenly by its own weight.**

Procedures to Load Machine

1. Stop a trailer on a level and hard ground.

   Keep a sufficient distance from the road shoulder.
2. Apply the brake of the trailer.
3. Put the chocks (1) on the tires to fix the trailer not to move.
4. Fix the ramp (2) to the trailer as follows.
   - Set the ramp parallel and in equal distance from the center of the trailer (3).
   - Keep the installation angle (4) at 15° or less. Do not allow them to come off during the work.
5. If the ramp (2) bend largely by the weight of the machine, put the block such as wooden block under the ramp.

   It prevents the deflection of the ramp (2).
6. Set the machine stop control of the object avoidance to OFF.
   1) Operate the operating part (g) of the lock lever to set it to the LOCK position (L).
   2) Set the machine stop control to OFF. See “How to Set Object Avoidance (3-367)”.

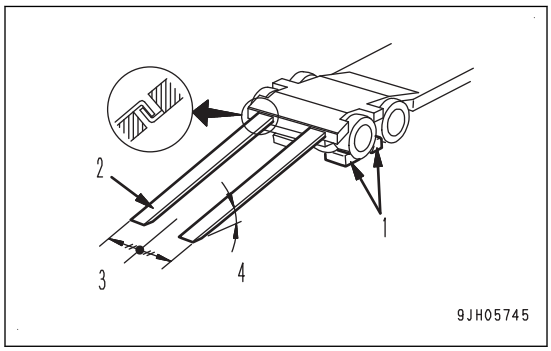

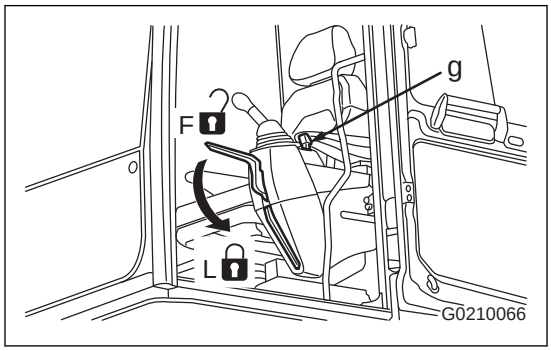

7. Set the travel speed to the low speed travel (Lo).

   Tap the travel speed icon to set the travel speed.

   For the procedure to change the travel speed, see “How to Change Travel Speed (3-267)”.

8. Tap the auto-deceleration icon to set auto-deceleration to OFF. Turn the fuel control dial to set the engine speed to low speed.
   - Each time you tap the auto-deceleration icon, it changes from OFF to ON, from ON to OFF in turn.
   - When the auto-deceleration icon is OFF, it is shown in white.

   For details on how to turn ON/OFF auto-deceleration, see “Auto-Deceleration Icon (3-42)”.

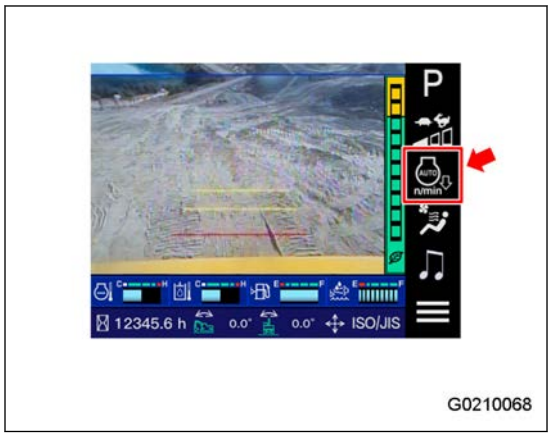

9. Set the swing lock switch to the ON position to apply the swing lock.

   When the swing lock switch is set to the ON position, the swing lock indicator (5) comes on.

   (a): ON position

   (b): OFF position

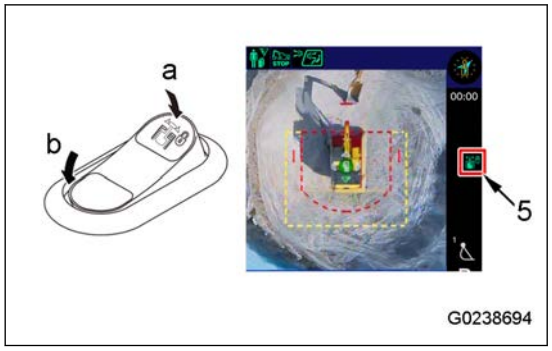

10. Operate the operating part (g) of the lock lever to set it to the FREE position (F).

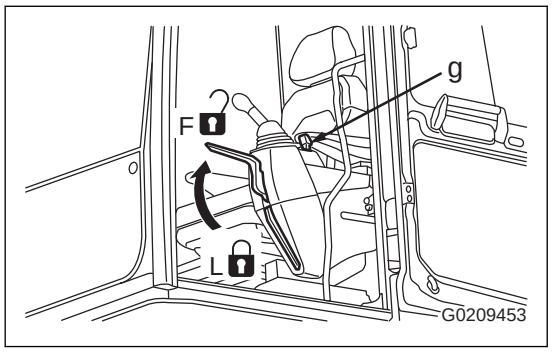

11. For machines with work equipment, move the machine forward to load it. For machines without work equipment, move it rearward to do the loading.

    Obey the instructions and signals of a conductor especially when you move the machine in reverse.

12. Make sure that the machine is in the conditions that follow before it rides on the ramp.
    - The position of the machine is straight to the ramp.
    - The centers of the machine and the trailer are aligned.

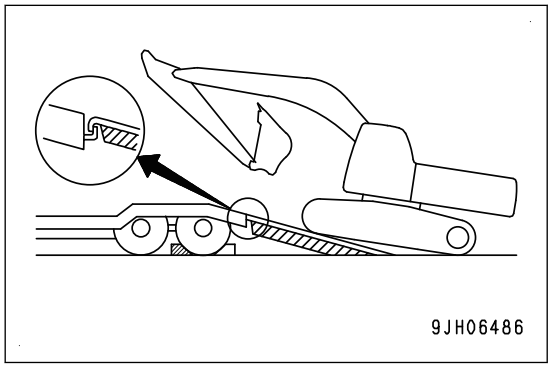

13. Lower the work equipment as much as possible.

    Keep the height of the work equipment in the range that does not interfere an obstacle.

14. Set the travel direction to the ramp, and move the machine slowly.

    On the ramp, do not operate the levers other than the travel lever.

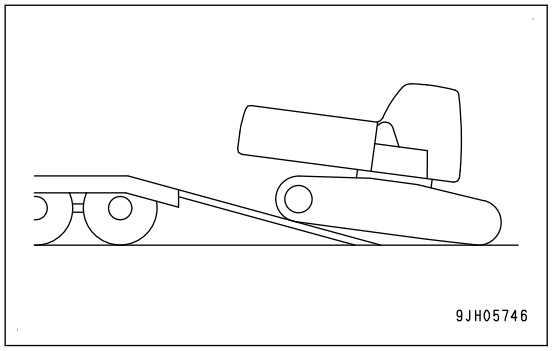

15. For machines with the work equipment, set the swing lock switch to the OFF position at the point where the tracks are on the ramp and the ground surface, and swing the upper structure slowly 180 °.

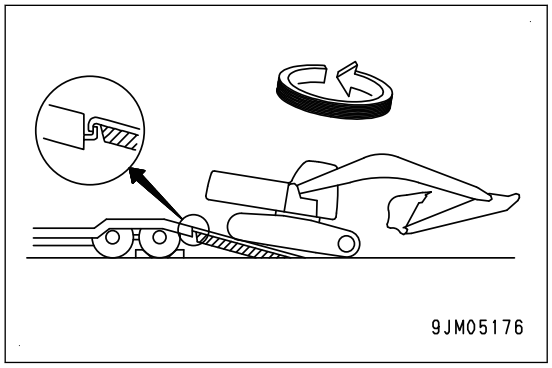

16. Set the swing lock switch to the ON position to apply the swing lock. When the swing lock switch is set to the ON position, the swing lock indicator (5) comes on.

    (a): ON position

    (b): OFF position

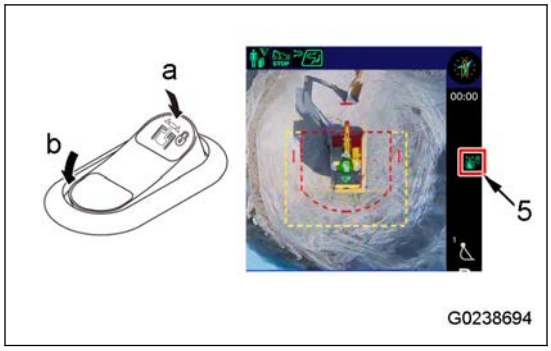

17. Move the machine rearward slowly to put it on the trailer.

    When the machine goes over the rear wheels of the trailer, it loses stability. Travel carefully and slowly (be sure not to steer).

    When the rear wheels move on fully, the machine tilts rearward. Carefully move the machine in reverse to the specified point, and then stop it.

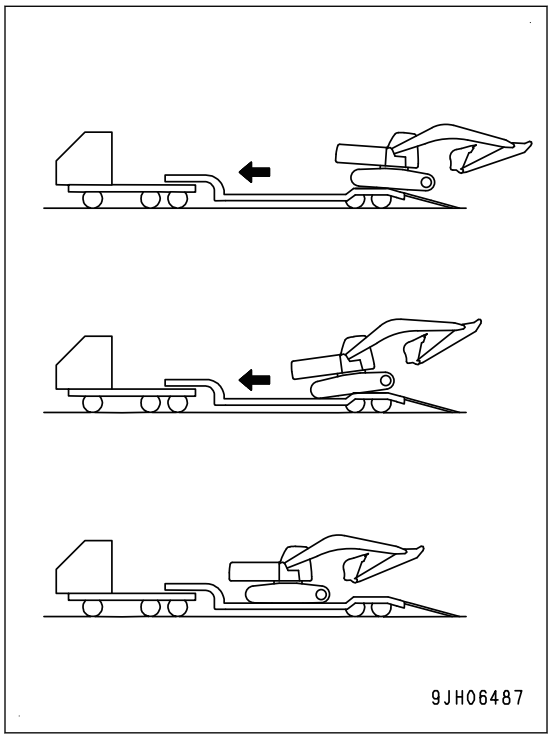

How to Secure Machine

WARNING

- **Secure the machine in the specified method.**

NOTICE

- **Stow the radio antenna.**
  To stow the radio antenna, see “Stow Antenna (3-344)”.
- **To avoid the damage to the bucket cylinder during transportation, put a wooden block at the end of the bucket link not to let the bucket cylinder touch the floor.**
- **Make sure that the engine hood catcher is locked. Hold the handle of the engine hood and raise it for a short distance. If it does not open, the catcher is locked.**
  If the engine hood catcher is not locked, there is a danger that the engine hood opens during transportation.

After you load the machine on a trailer, secure the machine as follows.

1. Extend the bucket cylinder and arm cylinder to their stroke end, and lower the boom slowly.

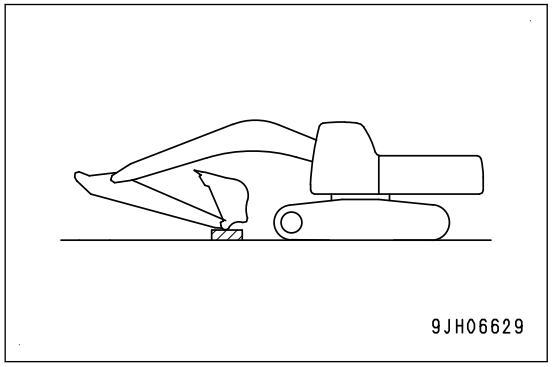

2. Operate the operating part (g) of the lock lever to set it to the LOCK position (L) securely.
3. Stop the engine.
4. Close all the doors, windows, and covers.
5. Lock the doors, covers, and caps with locks.

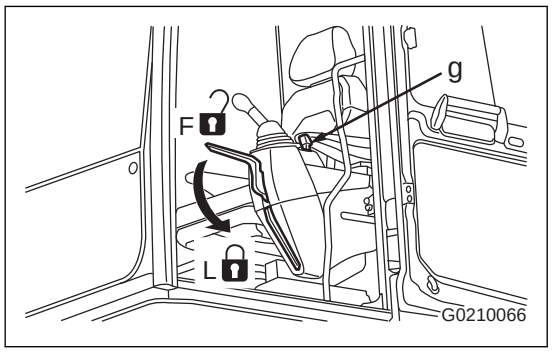

The method to secure the machine is selected by the regulations of each country and region. Select the method in response to the local transportation form.

Secure Machine with Tie-down Point

Put a chain or wire rope of correct strength to the tie down hole on the track frame.
F: Forward travel direction

R: Reverse travel direction

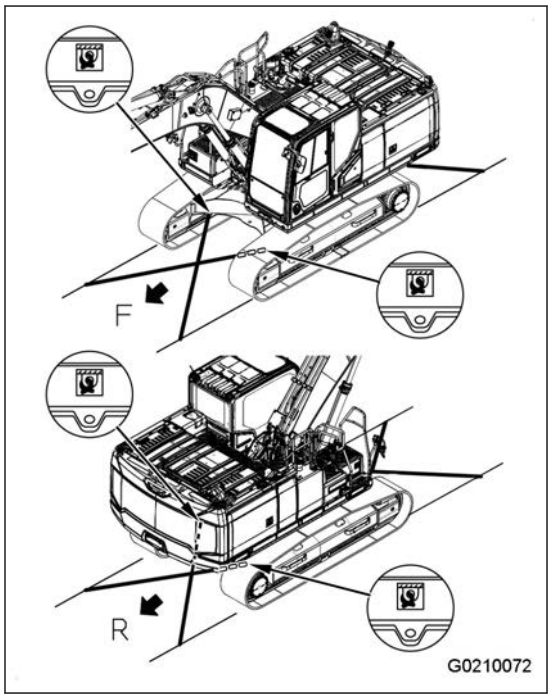

For road transportation, keep the installation angle of the chain or wire rope on the front and rear of machine in the range shown below.

Front side of machine

a1: 10 ° or below

a2: 25 to 45°

Rear side of machine

b1: 5 to 15°

b2: 25 to 45°

Do not let the chain or wire rope touch the machine.

The maximum distribution load of tie-down to the wire rope is 118600 N {12102 kgf} in the specified wire rope installation angle range.

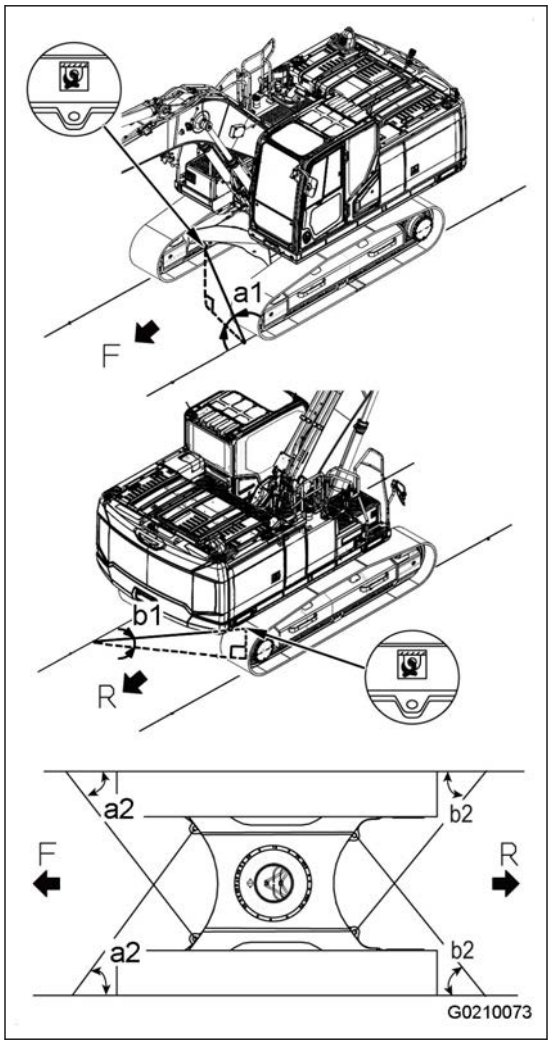

Secure Machine Without Tie-down Point

Put wooden blocks on the front and rear sides of the tracks, to make sure that the machine does not move during transportation, and secure the machine with chains or wire ropes of applicable strength.
Fix the machine securely to prevent sideway slip.

At this time, put pieces of wood between the wire ropes and machine to prevent damage.

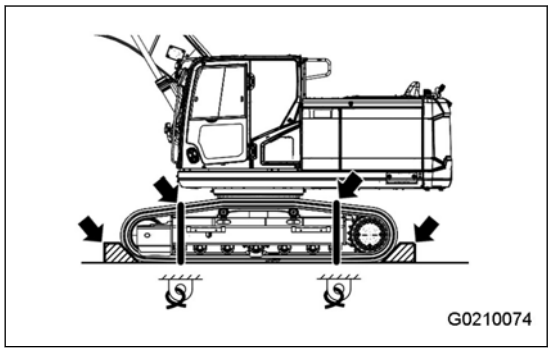

How to Remove and Install Mirror

If they are to be removed for shipment, or are to be installed again, perform the following procedure.

After you install the mirrors, be sure to adjust them. For details, see “How to Adjust Mirrors (3-222)”.

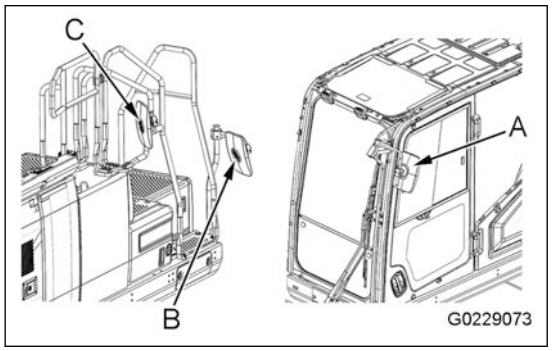

How to Remove Mirror

1. Loosen mounting bolt (2), then remove mirror (1) from support (3).

   Mirrors (A), (B)

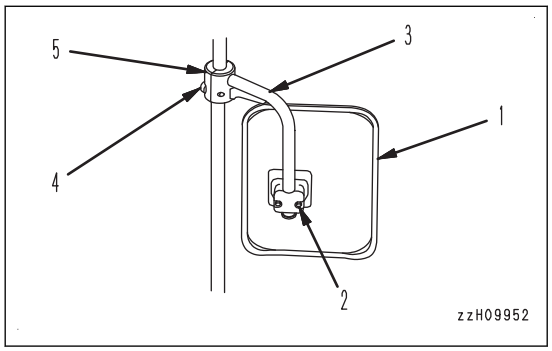

   Mirror (C)

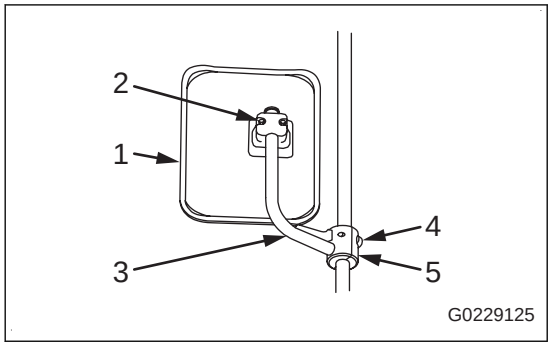

2. Loosen bolt (4) and remove support (3) and clamp (5) from the handrail.

How to Install Mirror

1. Install support (3) and clamp (5) to the handrail, then tighten them with bolt (4).

   Mirrors (A), (B)

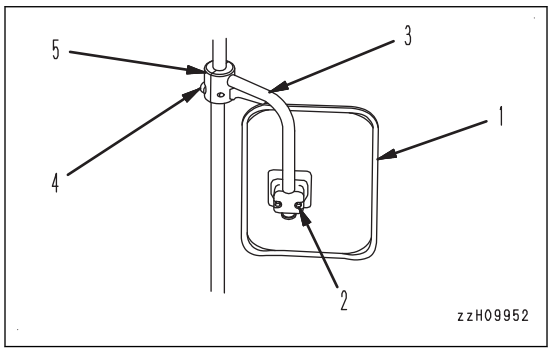

   Mirror (C)

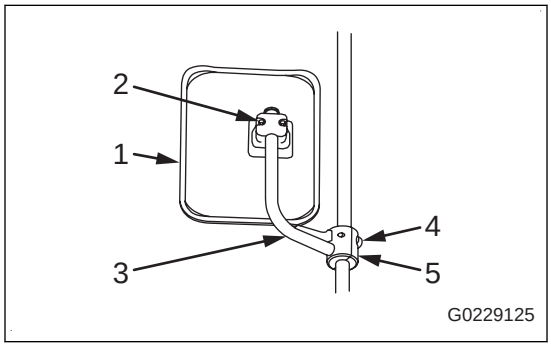

2. Install mirror (1) to support (3),then tighten it with lock bolt (2).

Procedures to Unload Machine

1. Stop a trailer on a level and hard ground.

   Keep a sufficient distance from the road shoulder.
2. Apply the brake of the trailer.
3. Put the chocks (1) on the tires to fix the trailer not to move.
4. Fix the ramp (2) to the trailer as follows.
   - Set the ramp parallel and in equal distance from the center of the trailer (3).
   - Keep the installation angle (4) at 15° or less. Do not allow them to come off during the work.
5. If the ramp (2) bend largely by the weight of the machine, put the block such as wooden block under the ramp.

   It prevents the deflection of the ramp (2).
6. Assemble the mirror again to the original state.
7. Remove the chains or the wire ropes which are used to fix the machine.

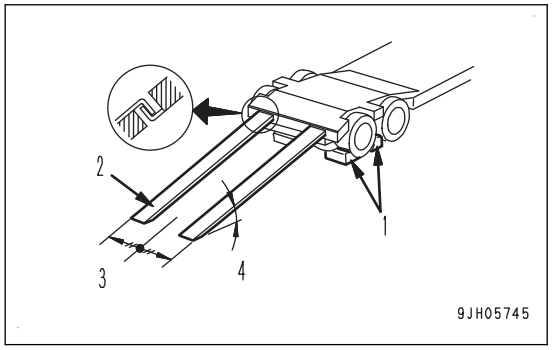

8. Start the engine.

   In cold weather, make sure to do the engine warm-up operation.

   For the method of engine warm-up operation, see “Engine Warm-up Operation (3-239)”.
9. Set the machine stop control of the object avoidance to OFF.
   1) Operate the operating part (g) of the lock lever to set it to the LOCK position (L).
   2) Set the machine stop control to OFF. See “How to Set Object Avoidance (3-367)”.

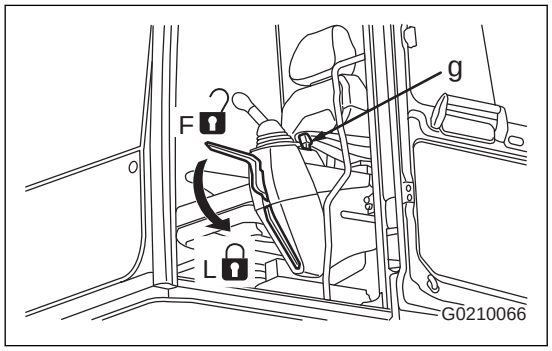

10. Set the travel speed to the low speed travel (Lo).

    Tap the travel speed icon to set the travel speed.

    For the procedure to change the travel speed, see “How to Change Travel Speed (3-267)”.

11. Tap the auto-deceleration icon to set auto-deceleration to OFF. Turn the fuel control dial to set the engine speed to low speed.
    - Each time you tap the auto-deceleration icon, it changes from OFF to ON, from ON to OFF in turn.
    - When the auto-deceleration icon is OFF, it is shown in white.

    For details on how to turn ON/OFF auto-deceleration, see “Auto-Deceleration Icon (3-42)”.

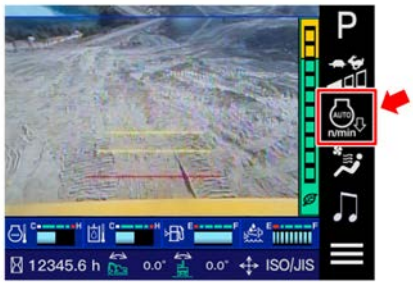

G0210068

12. Operate the operating part (g) of the lock lever to set it to the FREE position (F).

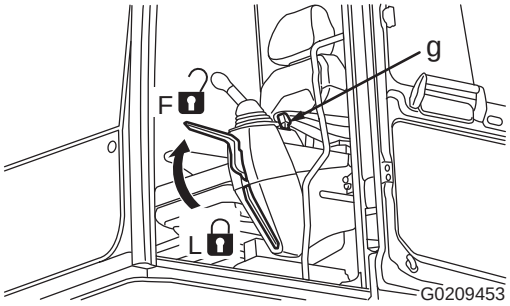

G0209453

13. See the direction of the track frame with the bird’s eye view icon (1).

    For the setting on track frame direction, see “Travel Heading Indicator (3-44)”.

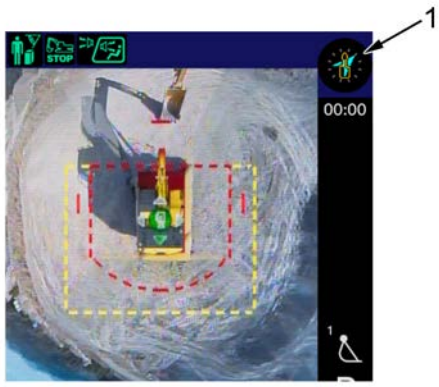

G0238695

14. Raise the work equipment, curl the arm below the boom, and move the machine slowly.
15. Make the machine to be horizontal on the top of the rear end of the trailer, and stop the machine.

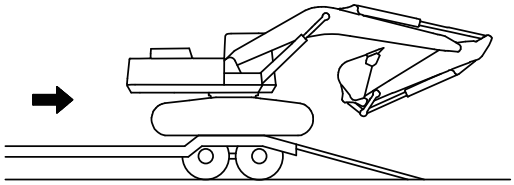
9JM00256

16. Set the angle between the arm and boom to be 90 ° to 110 °.

NOTICE

Keep the angle between the arm and boom to be 90 ° to 110 ° at all time while you do the unloading off the machine.
If the machine is unloaded while the arm is curled, it can cause damage to the machine.

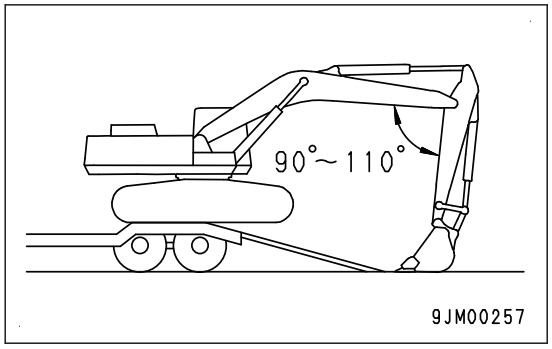

17. Lower the bucket to the ground.

NOTICE

Do not hit the bucket to the ground. It can cause damage to the hydraulic cylinder.

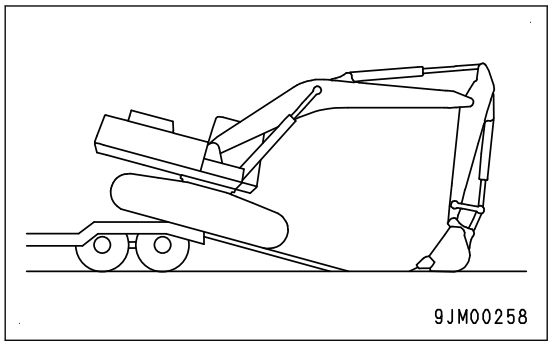

18. With the bucket lowered to the ground, move the machine to the ramp slowly from the rear end of the trailer.
19. Operate the boom and the arm slowly and do the unloading off the machine carefully until it is off the ramp fully.
20. Set the machine stop control of the object avoidance to ON.
    1) Operate the operating part (g) of the lock lever to set the lock lever to the LOCK position (L).
    2) Set the machine stop control to ON. See “How to Set Object Avoidance (3-367)”.

How to Lift Machine

⚠ WARNING

- **The person using the crane to perform lifting operations must be a qualified crane operator.**
- **Never perform lifting operation if any person is on the machine being lifted.**
- **Always use a wire rope that has ample strength for the weight of the machine being lifted.**
- **When lifting, keep the machine horizontal.**
- **When performing lifting operations, set the lock lever to LOCK position to prevent the machine from moving unexpectedly.**
- **Never enter the area under or around a lifted machine.**
- **Do not lift the machine in a posture other than those shown in the procedure below. Do not lift the machine with other lifting equipment.**
  There is a danger that the machine loses its balance.

NOTICE

This lifting method applies to the standard specification machine.
The lifting method differs depending on the attachments and options installed.
For the procedure for machines that are not the standard specification, consult your Komatsu distributor.

When you lift the machine, do the operation on a level ground as follows.

1. Start the engine.
2. Operate the operating part (g) of the lock lever and set it to the FREE position (F).

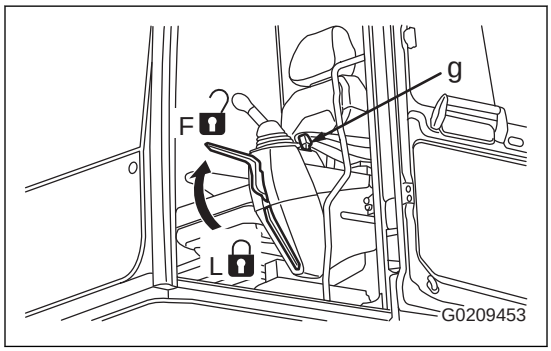

3. Swing the upper structure to the position where the work equipment comes to the sprocket (1) side.
4. Extend the bucket cylinder and arm cylinder fully and lower the work equipment to the ground with the boom cylinder as shown in the figure.

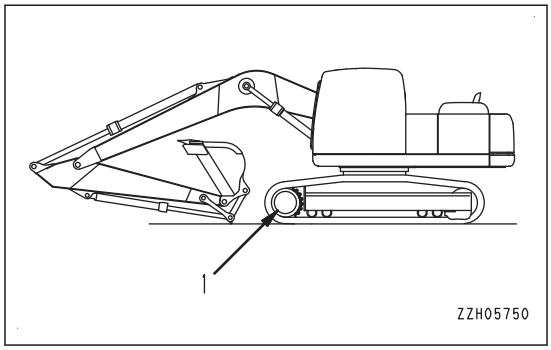

5. Operate the operating part (g) of the lock lever to set it to the LOCK position (L) securely.
6. Stop the engine.
7. Make sure that there is nothing around the operator seat, and get off the machine.

   Close the cab doors, front window glass, right and left doors, and engine hood securely.

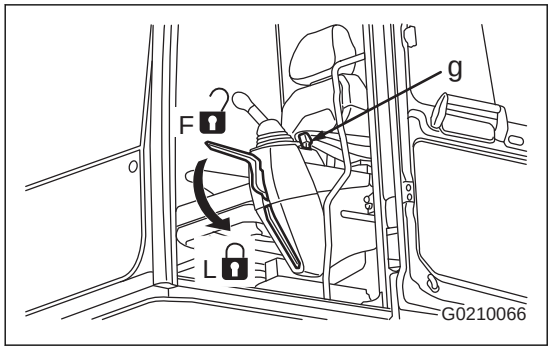

8. Put the wire ropes between the 1st and 2nd track rollers from the front side of the machine and between the 1st and 2nd track rollers from the rear side of the machine.

   For the machines with full roller guards for the track rollers, put the wire ropes below the track.

   When the wire rope contacts with the edge of the machine, put the wooden block or backing metal between them.
9. Make the lifting angle (A) of the wire rope to 30 ° to 40 °, and lift the machine slowly.
10. After the machine has a dynamic lift off, examine the hook condition and lifting posture, and lift the machine slowly.

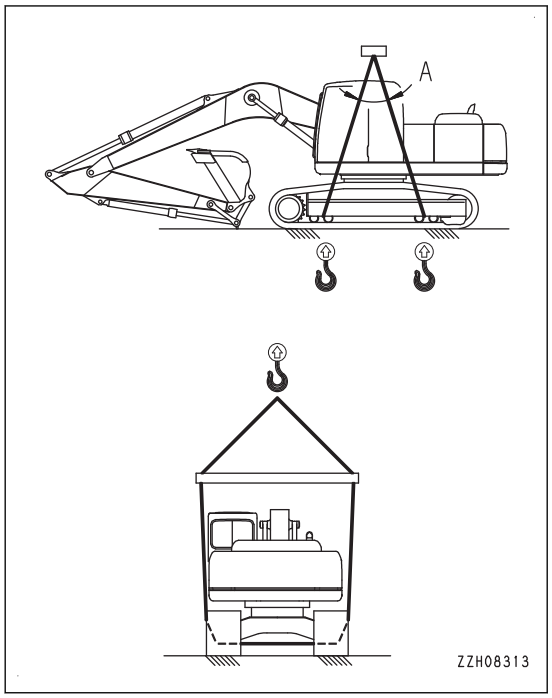

Cold Weather Operation

Cold Weather Operation Information

When the ambient temperature is low, the engine cannot start correctly or coolant can freeze. Obey the precautions that follow.

Fuel and Lubricants

Change the fuel and oil with ones of low viscosity.

For the specified viscosity, see Replacement Parts, “How to Use Fuel, Coolant and Lubricants by Ambient Temperature (7-10)”.

Coolant

⚠ WARNING

- **The coolant is poisonous. Be careful not to let it get in your eyes or on your skin. If coolant gets in your eyes or on your skin, clean the part with a lot of clean water, and consult a doctor immediately.**
- **Consult your Komatsu distributor or a qualified company for the disposal of the cooling water which contains the coolant that is discharged during the replacement of the coolant or repair of the radiator. The coolant is poisonous. Do not put it into drainage ditches or drain it on the ground surface.**

NOTICE

Komatsu recommends the use of Non-Amine Engine Coolant (AF-NAC).
As a general rule, coolant other than Non-Amine Type Engine Coolant (AF-NAC) is not recommended to use.

Do not move undiluted coolant near fire. It is flammable.

For the density of Non-Amine Engine Coolant (AF-NAC), see Maintenance, “Clean Inside of Cooling System (4-26)”.

DEF

NOTICE

- **DEF freezes at -11℃{12.2℉}.**
  If DEF in the DEF tank freezes, it can expand and cause damage to the devices in the tank or the parts.
- **In cold weather, keep the machine with DEF indoors where the temperature is at -11℃{12.2℉} or more to prevent the freezing of DEF in the tank.**
  If the machine with DEF cannot be stored indoors where the temperature is at -11℃{12.2℉} or more (the machine is parked outside in cold weather), DEF in the tank can freeze. Consult your Komatsu distributor to discharge DEF, and keep the machine in an area where it does not freeze.
- **When the ambient temperature is low, the tank shrinks, and it possibly makes a clearance between the fixing plate and tank.**
  No retightening is necessary because this clearance decreases as the tank temperature increases by the machine operation.

Battery

WARNING

- **Flammable gas occurs from the battery. There is a danger of explosion. Do not let an open flame be near it.**
- **Battery electrolyte is a dangerous object. Be careful not to let it touch the eyes or skin. If it gets in your eyes or on your skin, clean the part with a lot of clean water, and consult a doctor immediately.**
- **Battery electrolyte peels off the painting. If it gets on the machine, immediately clean it with water.**
- **When the battery electrolyte is frozen, do not charge the battery or start the engine with a different power source. Explosion can occur.**
- **Battery electrolyte is poisonous. Do not drain it into ditches or throw on the ground surface.**

- Low ambient temperatures can cause battery performance to decrease significantly.
  Put a cover on the battery or remove it from the machine and put it in a warm area. And then install it next morning.
- When the battery charge level is low, battery electrolyte can freeze.
  Keep the battery charge level as near as possible to 100%.
- If the electrolyte level is low, add purified water in the next morning before the work.
  Do not add purified water after the day's work to prevent freezing of the battery electrolyte during the night.
  If the machine is with Komatsu maintenance-free battery, see the display of the indicator, and obey the instruction. For details how to read the indicator, see “How to Examine Battery and Indicator of Komatsu Maintenance-Free Battery (4-69)”.

Measure the specific gravity of the electrolyte and calculate the battery charge level from the table below.

If the machine is with Komatsu maintenance-free battery, see the display of the indicator, and obey the instruction. For details how to read the indicator, see “How to Examine Battery and Indicator of Komatsu Maintenance-Free Battery (4-69)”.

Fluid temperature (℃ {℉}) Battery charge level (%)	20 {68}	0 {32}	-10 {14}	-20 {-4}
100	1.28	1.29	1.30	1.31
90	1.26	1.27	1.28	1.29
80	1.24	1.25	1.26	1.27
75	1.23	1.24	1.25	1.26

Precautions After Daily Work Ends in Cold Weather

Frozen mud and water on the undercarriage can prevent machine movement in the next morning. Obey the precautions that follow to prevent the freezing of the machine.

- Remove mud and water attached to the machine. Especially, clean the hydraulic cylinder rod. Prevent entry of mud or dirt together with drops of water on the rod into the seal.
- Fill up the fuel tank. Prevent moisture condensation in the tank caused by the change in the temperature.
- After work in water or mud, remove water according to the procedure that follows to extend the service life of the undercarriage.

⚠ WARNING

Make sure that the area around the machine is safe before you let the tracks rotate off the ground. Keep the person and the track at a distance because it is dangerous.

1. Run the engine at low idle.
2. Set the machine in the attitude shown in the figure.
   1) Swing the upper structure by 90 ° to make the work equipment laterally.
   2) Operate the work equipment control lever to lower the bottom part of the bucket to the ground.
   3) Operate the work equipment control levers slowly. Push the ground with the bucket bottom to raise the track for a short distance.
3. Operate the travel lever to rotate the track off the ground.
4. Rotate the right and left tracks off the ground in the same manner again and again.

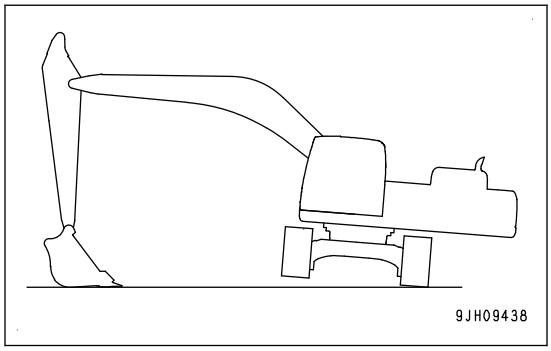

- Park the machine on a hard and dry ground.
  If there is no hard and dry ground, put boards on the ground and park the machine on them.
- Open the drain valve to drain water accumulated in the fuel system.
- When the ambient temperature is low, the capacity of the battery decreases significantly.
  Put a cover on it or remove it from the machine, and put it in a warm area. Then, install it the next morning.

After Cold Weather Season

When the season changes and the weather becomes warmer, do as follows.

Change the fuel and oil in components to the correct viscosity for the ambient temperature.

For the specified viscosity, see Replacement Parts, “How to Use Fuel, Coolant and Lubricants by Ambient Temperature (7-10)”.

If the machine with DEF is stored for long time in cold weather, DEF possibly freezes from time to time, and it possibly gives an effect on the quality of DEF. Consult your Komatsu distributor for inspection.

Precautions for Long-Term Storage

Prepare for Long-Term Storage

NOTICE

When you store the machine (more than 1 month), set the machine as shown in the figure to protect the hydraulic cylinder piston rods.

(To prevent the rust to the cylinder piston rods)

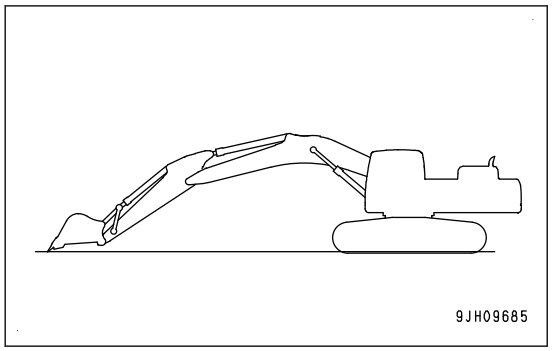

When you store the machine for a long time (more than 1 month), store it as follows.

- After the cleaning of each part, repair the paint to prevent rust, and store it indoors. If it is necessary to store the machine outdoors, select a level ground, and put a waterproof sheet over the machine.
- Fill up the fuel tank. This prevents dew drop.
- Fill up the DEF tank (excludes the cold season).
  This prevents urea deposit caused by evaporation. Urea deposit can cause problems on the operation of the devices.
- Lubricate the machine and change the oil.
- Apply grease to the exposed part of the hydraulic cylinder piston rod.
- After you turn the starting switch to the OFF position, make sure that the system operating lamp is off. Then turn the battery disconnect switch key to the OFF position and remove the key. Put a cover on the battery before you store it.
- Set the attachment control pedal of the machine ready for installation of attachment to the LOCK position.
- If the machine is ready for installation of attachment, set the stop valve to the LOCK position. Install the plugs to the elbows.
  For the explanation of the LOCK and FREE states of the stop valve, see “How to Remove and Install Attachment (6-25)”.
- To prevent rust, fill the cooling circuit with Non-Amine Engine Coolant (AF-NAC) to give a density of minimum 30% for the engine coolant.

Maintenance During Long-Term Storage

⚠ WARNING

If it is necessary to run the engine indoors, open the windows of the building for air ventilation.

During storage, do the monthly maintenance as follows.

1. Wipe off all the grease from the hydraulic cylinder piston rods before you operate the work equipment.
2. Operate the machine so that films of oil on lubricated parts are kept and the battery is charged.
3. Operate the cooling of air conditioner for 3 to 5 minutes while you run the engine at low idle.

   With this operation, grease of each part of the air conditioner compressor is not dried out.

   Check the refrigerant gas level two times for a year.

How to Start Machine After Long-Term Storage

NOTICE

If the machine is stored without monthly maintenance, consult your Komatsu distributor.

Do the procedure as follows before you operate the machine after long-term storage.

1. Wipe off all the grease from the hydraulic cylinder piston rods.
2. Add oil and grease at all lubrication points correctly.
3. Install the battery or remove the cover.
4. Insert the battery disconnect switch key and turn it to the ON position.

   For the operation of the battery disconnect switch, see “Battery Disconnect Switch (3-169)”.
5. Examine oil at all the parts before you start the engine.

   When the machine is stored for a long time, moisture in the air will mix with the oil.

   If there is water in the oil, change all the oil.
6. Start the engine.
7. Examine oil at all the parts again after the engine is started.

   If there is water in the oil, change all the oil.
8. Do the warm-up operation sufficiently.

   For the method of engine warm-up operation, see “Engine Warm-up Operation (3-239)”.

If the machine is stored for a long period while the battery disconnect switch is at the OFF position or the battery terminal is disconnected, it can cause the loss of the clock time information and radio tuning information. In this case, set them again. For details, see “Clock Adjustment (3-99)” and “Handle Radio Sound System (3-334)”.

If the machine was not operated for more than 2 months in the storage, do as follows.

- Before you start the engine, obey the procedure “How to Replace DEF Tank Filler Port Filter (4-97)” and “How to Replace DEF Filter (4-86)” to replace the DEF filter and fill up the DEF tank up to the F line.
- Start the engine, and make sure that the SCR system has no problem. If SCR system has a problem, warning is given on the monitor screen and by the buzzer sound. If a problem is found in the SCR system, stop the engine first, and then start it again. If the problem continues in SCR system even after you start the engine again, consult your Komatsu distributor.
- If DEF is kept in the DEF tank for more than 1 year, consult your Komatsu distributor for replacement. To dispose of the drained DEF, obey the local regulations and rules about the environment. Aged DEF can have smell of ammonia. Replace DEF in a well-ventilated area and be careful not to smell its vapor.

Troubles and Procedures

Procedures When Machine Runs out of Fuel

If you start the engine again after running out of fuel, fill up with fuel and bleed air from the fuel system.

Always examine the fuel level to prevent running out of fuel.

Bleed Air from Fuel Circuit

1. Turn the starting switch to the OFF position (A).

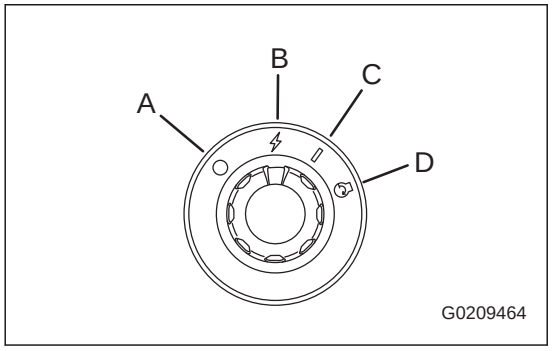

2. Loosen the knob of the feed pump (1), pull it out and push it in again and again, and then operate it until the movement becomes heavy.

   REMARK

   It is not necessary to remove the plugs at the fuel prefilter head and at the fuel main filter head.

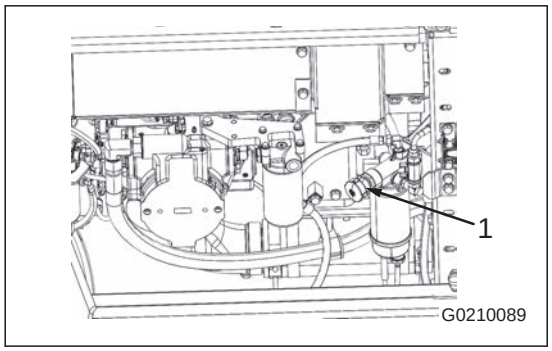

3. Push in the knob of the feed pump (1), and tighten it.
4. Turn the starting switch to the START position (D).

   NOTICE

   Do not keep the starting switch at the START position (D) continuously for 20 seconds or more.
   If the engine does not start, wait for approximately 2 minutes, and then try to start the engine again. Do this operation up to 4 times.

   The engine starts.

Precautions When You Tow Machine

⚠ WARNING

In the towing and being towed operation, a mistake in the selection of the wire rope or procedures can cause personal injury or death.

- **Make sure that the wire rope used for towing has a sufficient strength for the weight of the machine which is towed.**
- **A wire rope which has cut strands (A), reduced diameter (B), or kinks (C) can break. You must not use it.**
- **Put the leather gloves when you handle the wire ropes.**
- **Do not do the towing operation on a slope.**
- **During the towing operation, do not stand between the towing machine and the towed machine.**
- **Move the machine slowly. Do not put a sudden load to wire ropes.**
- **Do not use the towing light objects holes or tie-down holes when you tow the machine.**

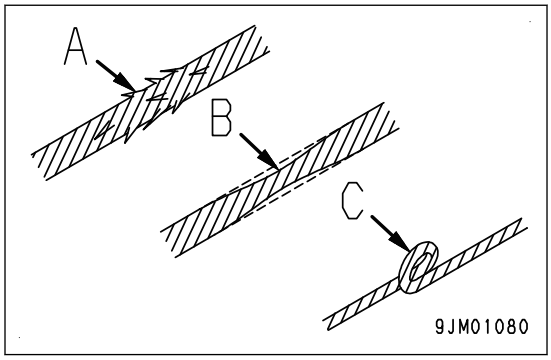

NOTICE

The maximum towing capacity for this machine is 158000 N {16100 kgf}.
Do not tow with power more than this.

- If the machine sinks in mud and cannot get out with its own power, or if the machine tows a heavy object, use a wire rope as shown in the figure.
- At this time, put pieces of wood between the wire ropes and machine to prevent damage.
- Hold the wire rope level, and set it straight to the track frame.
- When you tow the machine, tow it at a low speed of 1 km/h or less, and for a distance of some meters to move the machine to the area where you can do the repair easily.
  Do this operation only in an emergency.

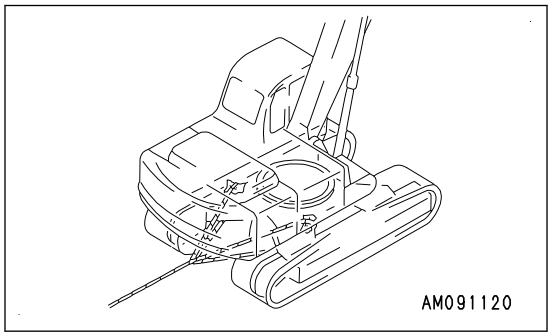

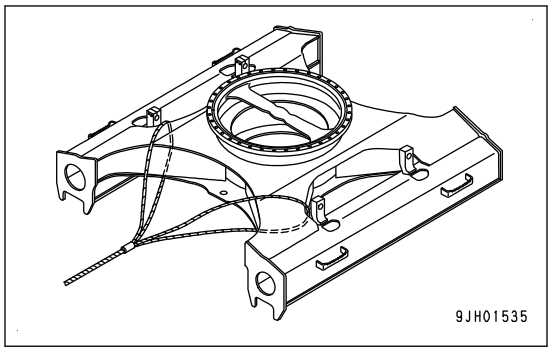

Precautions When You Use Lightweight Towing Hole

⚠ WARNING

- **Always use the correct towing equipment and towing method. Any mistake in the selection of the wire rope or drawbar or the method of towing a disabled machine and being towed may lead to serious personal injury or death. Select the appropriate tools and methods.**
- **The shackle must always be used.**
- **Hold the wire rope level and set it straight to the track frame.**
- **Move the machine slowly and be careful not to apply any sudden load to the wire rope.**
- **Do not use the tie-down holes for towing the machine.**

There is a hole in the track frame to fit the shackle when towing light objects.

Permissible towing load: Max. 58800 N {6000 kgf}

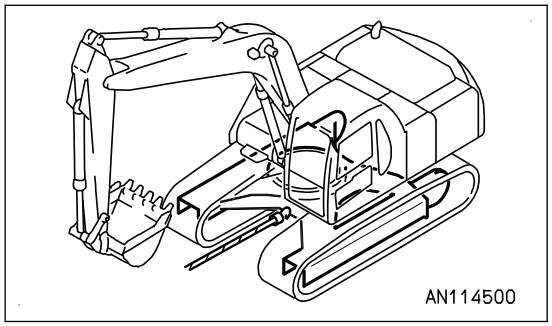

Precautions for Severe Work Condition

- If the mounting pins for the work equipment are soaked during the digging work in the water, grease the pins every time you do the work.
- When you do heavy or deep digging work, grease the mounting pins for the work equipment every time before the work.
  After the greasing, operate the boom, arm and bucket several times, and then grease again.

Procedures When Battery is Discharged

⚠ WARNING

- **Before you handle the battery, stop the engine and turn the starting switch to the OFF position. Turn the battery disconnect switch to the OFF position, and remove the key.**
- **Wear the protective eyeglasses and rubber gloves.**
- **Flammable gas occurs from the battery. There is a danger of explosion. Do not let an open flame be near it.**
- **Battery electrolyte is dangerous object. Be careful not to allow the battery electrolyte to get in contact with your eyes, skin or clothes.**
  If the battery electrolyte gets into your eyes, immediately clean your eyes with a large quantity of clean water, and consult a doctor.
  If the battery electrolyte gets on your clothes or skin, immediately clean it with a large quantity of clean water.
- **Before you charge the battery, be sure to remove the battery from the machine. If you charge the battery while it is installed to the machine, it is dangerous.**
- **When you remove or install it, examine the location of positive (+) terminal and negative (-) terminal.**

  When you remove the battery, disconnect the negative (-) terminal (ground side) first. Then, disconnect the positive (+) terminal.
  When you install the battery, connect the positive (+) terminal first. Then, connect the negative (-) terminal (ground side).
  To avoid sparks, do not allow an energizing object such as a tool to touch between the positive (+) terminal of the battery and the machine.
- **Install the terminals securely.**
  If a terminal is loose, there is a danger of explosion by a spark because of a defective contact.
- **For the procedure to remove or install the battery, see “How to Remove and Install Battery (3-550)”.**
- **Fix the battery body, and make sure that it does not move.**
  If it moves, fix it again.

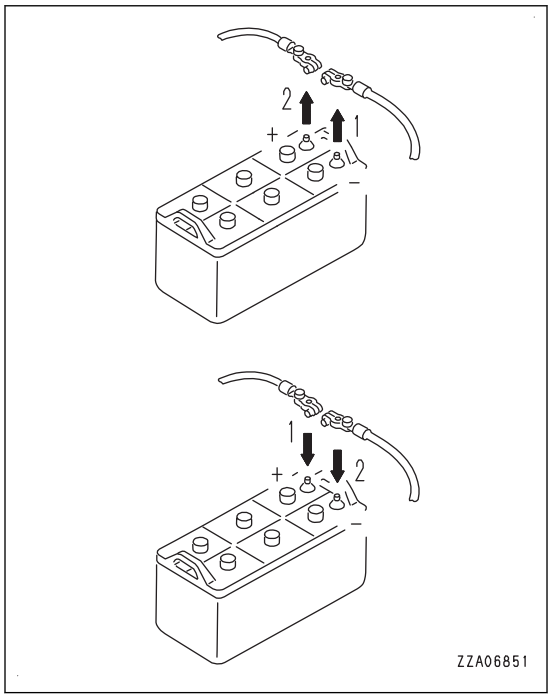

- **For the machines with Komatsu maintenance-free battery, be careful not to block the vent hole (a) when you install the battery.**

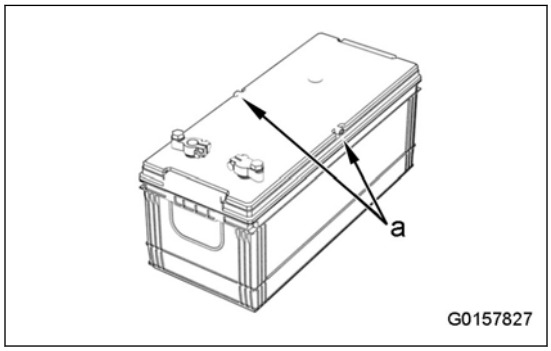

How to Remove and Install Battery

⚠ CAUTION

- **Before you handle the battery, stop the engine and turn the starting switch to the OFF position. Turn the battery disconnect switch to the OFF position, and remove the key.**
- **Disconnect the terminal from the negative (-) (ground) side to the positive (+) side in this sequence. To avoid sparks, do not allow an energizing object such as a tool to touch between the positive (+) terminal of battery and the machine.**
- **When you install the battery, connect the ground side last.**

1. Open the cover (1) at the rear left of the machine.
2. Lock it securely with the cover support lever.

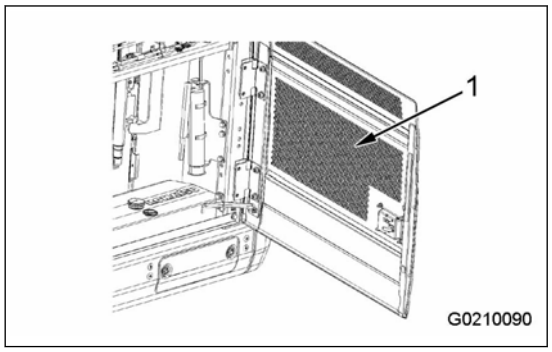

3. Remove the nuts (2) from 2 places on the top surface of the battery. Remove the covers (3) from 2 places.

   REMARK

   The thread parts of the nuts (2) are made of resin, and the thread surface goes back to the initial condition even if the nuts are tightened continuously. The tightening force keeps unchanged all the time and stays heavy. This is not an abnormal condition.

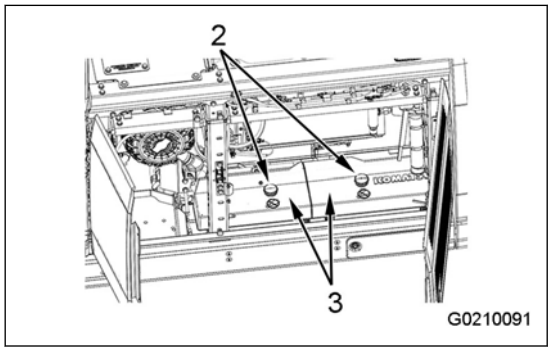

4. Disconnect the connection cable (4) on the negative (-) terminal (ground side).
5. Disconnect the cable (5) and the connection cable (6) on the positive (+) terminal side.
6. Remove the 4 mounting bolts (7).
7. Remove the mounting hardware (8).
8. Remove the battery from the machine.

When you install the battery, do the work in the reverse procedure of removal.

When you replace the battery, fix the battery body securely with the battery mounting hardware.

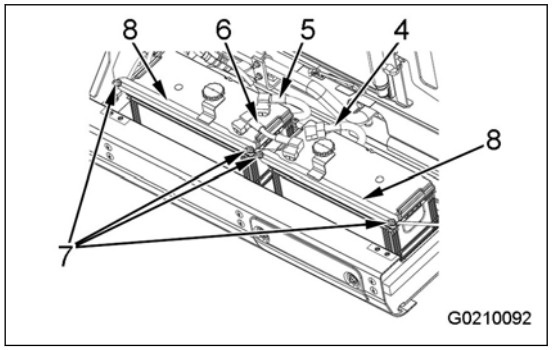

- Tightening torque of battery terminal retaining nut (A): 9.8 to 11.8 Nm {1.0 to 1.2 kgfm, 7.23 to 8.68 lbft}
- Tightening torque of mounting bolt (B)
  (B1) (Lower side): 1.47 to 1.96 Nm {0.15 to 0.2 kgfm, 1.08 to 1.45 lbft}
  (B2) (Upper side): 11.8 to 19.6 Nm {1.2 to 2.0 kgfm, 8.68 to 14.5 lbft}

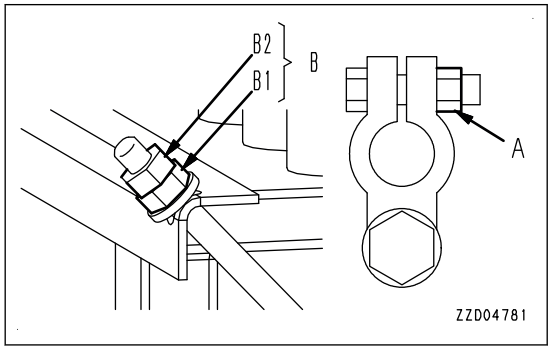

Precautions When You Charge Battery

⚠ WARNING

When you charge the battery, if the battery is not handled correctly, there is a danger that the battery can explode. Obey the instructions in the instruction manual of the charger, and obey the precautions that follow, too.

- **Adjust the voltage of the battery charger by that of the battery to be charged. If the voltage is not set correctly, the battery charger will overheat and cause a fire. It can cause an explosion.**
- **Connect the positive (+) charger clip of the battery charger to the positive (+) terminal of the battery, and connect the negative (-) charger clip of the battery charger to the negative (-) terminal of the battery. Be sure to fix the clips securely.**
- **For the liquid stopper type charger, set the charge current to 1/10 or below of the value of the rated battery capacity. When you use the quick charger, set it to the value of the rated battery capacity or below.**
  For machines with Komatsu maintenance-free battery, set the charge current to 1/10 or below of the value of the rated battery capacity. Do not charge it with the quick charger.
  If the charge current is too high, the electrolyte leakage can occur or the battery cells will dry up, and this can cause the battery to catch fire and explode.
- **When the battery electrolyte is frozen, do not charge the battery or start the engine with a different power source. There is a danger that battery electrolyte can catch fire and explode.**
- **If the battery electrolyte level is less than the LOWER LEVEL line, do not use or charge the battery. It can cause explosion. Be sure to examine the battery electrolyte level at the periodic interval. For a liquid stopper type battery, add purified water (such as a commercial battery supplement fluid) to UPPER LEVEL line.**
  For the machine with Komatsu maintenance-free battery, see the display of the indicator, and obey the instruction. For details how to read the indicator, see "How to Examine Battery and Indicator of Komatsu Maintenance-Free Battery (4-69)".

9JD01735

Start Engine with Jumper Cables

WARNING

- **When you connect the cable, you must not connect the positive (+) terminal and negative (-) terminal.**
- **Be sure to wear the protective eyeglasses and rubber gloves when you start the engine with the jumper cable.**
- **Do not let the normal machine touch the failed machine.**
  The sparks caused near the battery can fire the hydrogen gas from the battery. Be careful not to let it occur.
- **Connect the jumper cables correctly. In the last connection (to the upper structure frame), a spark will be caused. So, keep the connection location and the battery as much distance as possible (do not go near the work equipment, because conduction is not easy).**
- **When you disconnect the jumper cable, be careful not to let the clips touch each other or the machine.**

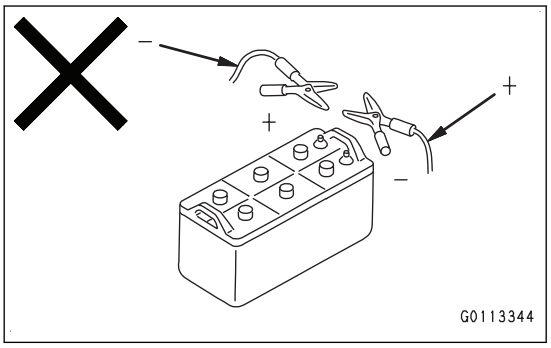

NOTICE

- **The starting system for this machine uses 24 V power supply. Accordingly, the normal machine must have a 24 V power supply.**
- **The thickness of the jumper cable and clip must agree with the battery size.**
- **The battery of the normal machine must be the same capacity as that of the failed machine.**
- **Examine the cables and clips for damage or corrosion.**
- **Make sure that the clips are securely connected.**
- **Make sure that the lock levers and parking brake levers (if equipped) of two machines are in the LOCK position.**
- **Make sure that each lever is in the NEUTRAL position.**
- **To prevent damage of the electric devices of the failed machine, after you turn the starting switch of the damaged machine to the OFF position before you connect the booster cable, make sure that the system operating lamp is off. And then set the battery disconnect switch key to the OFF position. For the operation method of the battery disconnect switch, see “Battery Disconnect Switch (3-169)”.**

Procedure to Connect Jumper Cables

Turn the starting switch and battery disconnect switch of the failed machine, and the starting switch of the normal machine to OFF position.

1. Connect the clip of jumper cable (A) to the positive (+) terminal of battery (C) on the failed machine.
2. Connect the clip at the other end of jumper cable (A) to the positive (+) terminal of battery (D) on the normal machine.
3. Connect the clip of jumper cable (B) to the negative (-) terminal of battery (D) on the normal machine.
4. Turn the battery disconnect switch (S) of the failed machine to ON position.
5. Connect the other clip of jumper cable (B) to the revolving frame (E) of the failed machine.

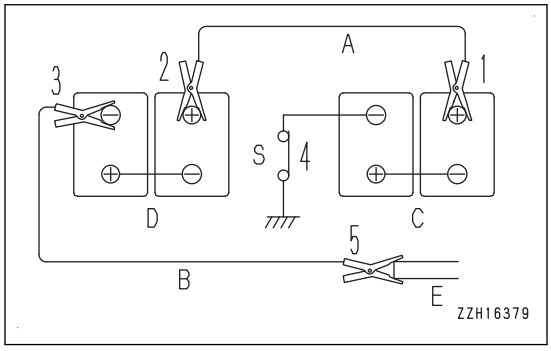

How to Start Engine

1. Check both of normal machine and failed machine that the lock lever is set to LOCK position.

   Check also that all the control levers are in NEUTRAL position.
2. Make sure the clips are firmly connected to the battery terminals.
3. Start the engine of the normal machine and run it at high idle (max. speed).
4. Turn the starting switch of the failed machine to START position and start the engine.

   If the engine does not start, try again after at least 2 minutes.

Procedure to Disconnect Jumper Cables

After the engine has started, disconnect the jumper cables in the reverse of the order in which they were connected.

1. Remove the clip of jumper cable (B) from the revolving frame (E) of the failed machine.
2. Remove the clip of jumper cable (B) from the negative (-) terminal of battery (D) on the normal machine.
3. Remove the clip of jumper cable (A) from the positive (+) terminal of battery (D) on the normal machine.
4. Remove the clip of jumper cable (A) from the positive (+) terminal of battery (C) on the failed machine.

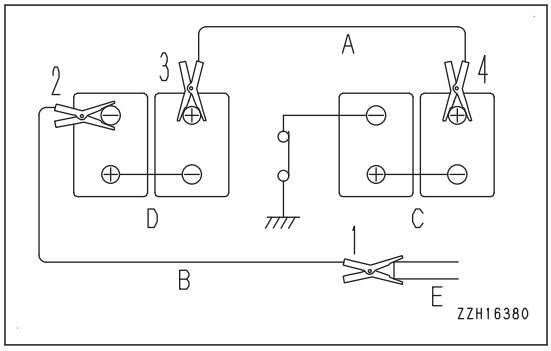

Other Trouble

Troubles and Procedures on Electrical System

- Be sure to consult your Komatsu distributor for the remedies shown with (*) in the action column.
- If there can be other problem or cause than the ones below, consult your Komatsu distributor for repair.

Problem	Main causes	Action
The lamp is not bright even when the engine runs at maximum speed.	Defective wiring, deteriorated battery	Examine the loose terminal and wire breakage, repair them, and replace the battery. (*)
	Looseness and damage of fan belt	Examine tension of fan belt, replace. (*)
The lamp flickers while engine is in operation.	Defective wiring, deteriorated battery	Examine the loose terminal and wire breakage, repair them, and replace the battery. (*)
	Looseness and damage of fan belt	Examine tension of fan belt, replace. (*)
The charge level caution lamp does not go off even while the engine runs.	Defective alternator	Replace. (*)
	Defective wiring	Examine, repair. (*)
	Looseness of fan belt	Examine tension of fan belt, replace. (*)
Unusual noise comes out from the alternator.	Defective alternator	Replace. (*)
The starting motor does not rotate even when the starting switch is turned to the START position.	Defective wiring	Examine, repair. (*)
	Defective starting motor	Replace. (*)
	Battery charge is not sufficient.	Charge the battery.
	Battery disconnect switch is at the OFF position.	Turn it to the ON position.
	Engine shutdown secondary switch is at “ENGINE STOP” position.	Set it to the “NORMAL” position. Put a cover on it.
The pinion of the starting motor engages and disengages continuously (rattles).	Battery charge is not sufficient.	Charge the battery.
	Defective safety relay	Replace. (*)
The starting motor cannot crank engine smoothly.	Battery charge is not sufficient.	Charge the battery.
	Defective starting motor	Replace. (*)
The starting motor disengages before engine starts.	Defective wiring, ring gear or pinion	Examine, repair. (*)
	Battery charge is not sufficient.	Charge the battery.
The preheating icon is not shown with a highlight.	Defective wiring	Examine, repair. (*)
	Defective heater relay	Replace. (*)
	Defective machine monitor	Replace. (*)
The engine oil pressure caution lamp does not come on when engine is stopped (starting switch is at the ON position).	Defective machine monitor	Replace. (*)
	Defective engine oil pressure switch	Replace. (*)

Problem	Main causes	Action
The engine does not start easily at low temperature, or it is not felt warm when you touch the external part of the electrical intake air heater by hand immediately after it is preheated.	Defective wiring	Examine, repair. (*)
	Open circuit in the electrical intake air heater	Replace. (*)
	Defective heater relay	Replace. (*)
	Blown heater fuse	Replace. (*)
The engine does not start. (“L04” on the machine monitor comes on.)	Data in the controller has damage.	Examine, repair. (*)
	Other system has problems.	Examine, repair. (*)
Camera image is not shown on the machine monitor.	Defective wiring	Examine the loose or disconnected connector, or wire breakage, and repair them. (*)
	Defective camera	Replace. (*)
	Defective machine monitor	Replace. (*)

Troubles and Procedures on Chassis

- Be sure to consult your Komatsu distributor for the remedies shown with (*) in the action column.
- If there can be other problem or cause than the ones below, consult your Komatsu distributor for repair.

Problem	Main causes	Action
The speeds of travel, swing, boom, arm, and bucket are slow.	Hydraulic oil is not sufficient.	Adjust the oil level to the specified level. See How to Examine Before You Start Operation.
	Setting by operator	Adjust it. See “Speed Adjustment (3-71)” and “Adjustable Priority (3-71)”.
Unusual noise comes out from pump. (Air intake)	Hydraulic tank strainer element is clogged or oil is not sufficient.	Clean. See Every 2000 Hours Maintenance.
Hydraulic oil temperature increases too much.	The fan belt is loose.	Examine tension of fan belt, replace. (*)
	Oil cooler is dirty.	Clean. See Every 500 Hours Maintenance.
	Hydraulic oil is not sufficient.	Adjust the oil level to the specified level. See How to Examine Before You Start Operation.
Track comes off.	The track is too loose.	Adjust track tension. See When Required.
Unusual wear of sprocket	The track is too loose.	Adjust track tension. See When Required.
The work equipment does not operate.	Effect of the 3D boundary control function	For the 3D boundary control function, see the Operation and Maintenance Manual of 3D Machine Control, “3D Boundary Control”.
		If the work equipment does not move during a failure, turn off the 3D boundary control temporarily.
	Effect of the 2D boundary control and cab interference prevention	For 2D boundary control, see “2D Boundary Control (3-370)”. For cab interference prevention, see “Cab Interference Prevention (3-389)”.
		If the work equipment does not move during a failure, turn off the 2D boundary control and cab interference prevention temporarily.
	Effect of the machine control function	See “2D Machine Control (3-401)”.

Problem	Main causes	Action
The machine does not turn.	Operation mistake of swing lock switch	Set swing lock switch to OFF.
	Failure of swing parking brake	Examine, adjust. (*)
		When it is necessary to move the machine to a safe area, set the swing parking brake cancel switch to ON temporarily.
	Effect of the object avoidance, 3D boundary control function, 2D boundary control, or “swing to angle”	For the functions of the object avoidance, see “Function of Object Avoidance (3-362)”. For the 3D boundary control function, see the Operation and Maintenance Manual of 3D Machine Control, “3D Boundary Control”. For 2D boundary control, see “2D Boundary Control (3-370)”. For “swing to angle”, see “Swing to Angle (3-394)”.
The machine does not travel.	Effect of the object avoidance or the 3D boundary control function	For the functions of the object avoidance, see “Function of Object Avoidance (3-362)”. For the 3D boundary control function, see the Operation and Maintenance Manual of 3D Machine Control, “3D Boundary Control”.

Troubles and Procedures on Engine Related Parts

- Be sure to consult your Komatsu distributor for the remedies shown with (*) in the action column.
- If a trouble or cause other than shown in the table is found, consult your Komatsu distributor for repair.

Problem	Main causes	Action
The engine oil pressure caution lamp comes on (The alarm buzzer operates at the same time).	Oil level in the oil pan is not sufficient (air is sucked).	Adjust the oil level to the specified level. See “How to Examine Before You Start Operation”.
	Oil is not applicable. (Viscosity is not applicable.)	Change oil. See “How to Use Fuel, Coolant and Lubricants by Ambient Temperature”.
	Engine oil filter cartridge is clogged.	Replace the cartridge. See “Every 1000 Hours Maintenance”.
	Oil leakage because oil pipe and pipe joint are not tightened correctly or they break.	Check and repair of the oil pipe and the pipe joint. (*)
	Defective engine oil pressure sensor	Replace the engine oil pressure sensor. (*)
	Defective machine monitor	Replace the machine monitor. (*)

Problem	Main causes	Action
The pointer of the engine coolant temperature gauge is in the red range (The caution lamp comes on and the alarm buzzer operates at the same time).	Coolant is not sufficient or leaks.	Examine, repair or add coolant. See “How to Examine Before You Start Operation”.
	The fan belt is loose.	Replace the fan belt, examine the tension. (*)
	Accumulation of dirt or scale in cooling system	Clean the inside of the cooling system and replace the coolant. See “Maintenance when Required”.
	Clogged radiator fins or fin has damage	Clean and repair the fins. See “Every 500 Hours Maintenance”.
	Defective thermostat	Replace the thermostat. (*)
	The radiator cap is loose (in high altitude operation).	Tighten the cap or replace the packing.
	Defective machine monitor	Replace the machine monitor. (*)
Steam spurts out from the top of the expansion tank (pressure valve).	Coolant is not sufficient or leaks.	Examine, repair or add coolant. See “How to Examine Before You Start Operation”.
	The fan belt is loose.	Replace the fan belt, examine the tension. (*)
	Accumulation of dirt or scale in cooling system	Clean the inside of the cooling system and replace the coolant. See “Maintenance when Required”.
	Clogged radiator fins or fin has damage	Clean and repair the fins. See “Every 500 Hours Maintenance”.
	Defective thermostat	Replace the thermostat. (*)
	Looseness of expansion tank cap (in high altitude operations)	Tighten the cap or replace the packing.
	Defective machine monitor	Replace the machine monitor. (*)
The starting motor operates but the engine does not start.	The fuel is not sufficient.	Adjust the oil level to the specified level. See “How to Examine Before You Start Operation”.
	Air in fuel system	Bleed air. See “Every 500 Hours Maintenance”.
	Defective fuel injection pump or defective nozzle	Replace the pump or nozzle. (*)
	Starting motor cannot crank engine smoothly.	See “Troubles and Procedures on Electrical System”.
	Preheating icon does not come on.	See “Troubles and Procedures on Electrical System”.
	Defective compression (defective valve clearance)	Adjust valve clearance. (*)
	No logged-on operator	Log on to the machine.

Problem	Main causes	Action
Exhaust color is white or bluish.	Too much oil in oil pan	Adjust the oil level to the specified level. See “How to Examine Before You Start Operation”.
	Water entry in the aftertreatment devices	Examine, repair. (*)
	Damage of aftertreatment devices	Replace aftertreatment devices. (*)
	Defective fuel	Change it with specified fuel.
Exhaust becomes black from time to time.	Damage of aftertreatment devices	Replace aftertreatment devices. (*)
	Air cleaner element is clogged.	Clean and replace the air cleaner element. See “Maintenance When Required” for details.
	Defective nozzle	Replace the nozzle. (*)
	Defective compression (defective valve clearance)	Adjust valve clearance. (*)
	Defective turbocharger	Clean or replace turbocharger. (*)
Combustion makes a breathing sound from time to time.	Defective nozzle	Replace the nozzle. (*)
Unusual noise comes out (combustion or mechanical).	Low grade fuel is used	Change it with specified fuel.
	Overheat	See “The pointer of the engine coolant temperature gauge is in the red range (The caution lamp comes on and the alarm buzzer operates at the same time)” above.
	Damage on the inside of the muffler	Replace the inside of the muffler. (*)
	Valve clearance is too much.	Adjust valve clearance. (*)
The engine stops during operation.	Fuel prefilter is clogged.	Replace the cartridge. See “Every 500 Hours Maintenance”.
	Fuel main filter is clogged.	Replace the cartridge. See “Every 1000 Hours Maintenance”.
	Defective engine and fuel circuit	Examine, repair. (*)

If Machine Monitor Shows Warning Display

When the action level or caution lamp is shown on the machine monitor display, tap the caution lamp display to see current abnormality list and see the contents and remedy.

G0238696

- Even if the machine does not run out of fuel, if “CA2249” or “CA559” is shown on the current abnormality screen, replace the fuel main filter and fuel prefilter immediately. For the replacement method, see “How to Replace Fuel Prefilter Cartridge (4-58)” and “How to Replace Fuel Main Filter Cartridge (4-76)”.
  If “CA2249” or “CA559” is shown even after the replacement, consult your Komatsu distributor for inspection and repair immediately, even if the machine can do the normal operation.
- If there is an item of “CA555” or “CA556” on the current abnormality screen, see if the blowby hose outlet (1) is clogged with soil and sand. If it is clogged, remove the soil and sand.

  If “CA555” or “CA556” does not go off even after the soil and sand is removed, immediately consult your Komatsu distributor for inspection and repair.

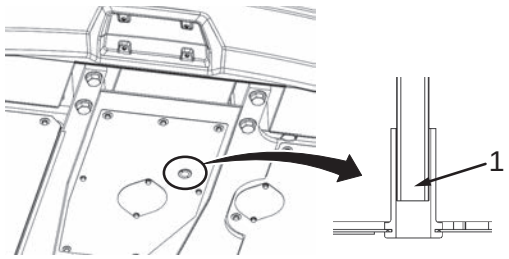

G0210350

Contact Telephone Number if Error Occurs

When an error screen is shown on the monitor, tap the caution lamp display to show current abnormality screen and telephone number for the point of contact is shown in the message column at the bottom of the screen.

REMARK

If no contact telephone number is registered, no telephone number is shown.
Consult your Komatsu distributor for the telephone number registration if necessary.

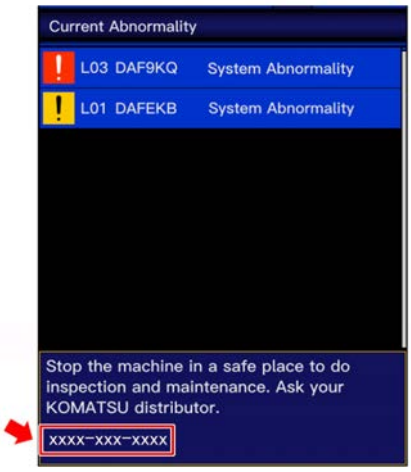

G0229119

Maintenance

⚠ WARNING

Please read and make sure that you understand the SAFETY section before reading this section.

Precautions for Maintenance

- Do not perform any inspection and maintenance operation that are not found in this manual.
- If it is necessary to repair it, consult your Komatsu distributor.
- If you do not do the inspection in accordance with the maintenance schedule or if you do irregular adjustments or changes to the components or systems, it will have a bad effect to the warranty given by the manufacturer or Komatsu distributor.
  For the questions, consult your Komatsu distributor.

Examine Service Meter Reading

Examine the service meter reading every day to see if the maintenance time reaches the required maintenance interval.

Komatsu Genuine Replacement Parts

Komatsu recommends to use Komatsu genuine parts specified in Parts Book as replacement parts.

Komatsu Genuine Lubricants

For lubrication of the machine, Komatsu recommends you to use Komatsu genuine lubricants. Also, use oil and grease of the specified viscosity in response to the ambient temperature.

Always Use Clean Washer Fluid

Use automobile window washer fluid, and be careful not to allow dirt to get into it.

Clean Lubricants

Use the clean oil and grease.

Use clean containers to prevent entry of dirt.

Examine Drained Oil and Used Filter

If you replaced filter when you changed oil, examine the drained oil and used filter. If you found a lot of foreign materials, report it to the responsible person to do corrective action.

Precautions When You Refill Fuel

If a strainer is attached to the filler port, do not remove it when you add fuel.

Precautions When You Add DEF

Do not remove the strainer when you add DEF. To add DEF, it is recommended to use a nozzle which has a diameter and a length specified by ISO22241-4 and has an auto stop function.

Precautions for Welding

- When you repair weld, turn the starting switch to the OFF position first. Make sure that the system operating lamp is off, set the battery disconnect switch key to the OFF position, and remove it.
- Do not continuously apply a voltage 200 V or more.
- Connect the ground cable in the area 1 m {3 ft 3 in} or below from the welding part. If the ground cable is connected near the electric devices or connectors, the device can have damage.
- Make sure that there are no seals, bearings, or bushings between the welding part and ground.
  Sparks can cause damage to the seals.
- Do not connect the ground cable around a pin or hydraulic cylinder.
  Sparks can cause damage to the plated parts of the pin or cylinder.

Do Not Drop Things Inside Machine

- When you open the inspection windows or oil filler port of the tank for inspection, be careful not to let things fall into the machine. It can cause damage or failure of the machine.
  If you dropped an object in it, be sure to remove it.

- Carry only things which are necessary for inspection.

Precautions for KDPF and SCR Assembly

Be careful for the high-temperature part during the inspection and maintenance. Even if the engine is stopped, the temperature around the KDPF and SCR assembly can be high.

Dusty Jobsites

When you do the work at dusty jobsites, obey the items below.

- Examine the air cleaner for clogging frequently with the dust indicator.
  If it is clogged, clean the air cleaner element immediately.
- Clean the radiator core early before it is clogged.
- Clean and replace the fuel filter frequently.
- Clean the electrical components to prevent accumulation of dirt. Especially clean the starting motor and alternator to prevent accumulation of dirt.
- When you examine oil or filters, and change oil or replace filter, prevent entry of dirt.

Avoid Mixing Oil

Do not mix different brand or grade of oil.

If it is necessary to use a different brand or grade of oil, change all the oil and replace the filter at the same time.

Lock Inspection Covers

- If you do the maintenance while the inspection cover with a lock bar is open, securely fix it into position.
  If the inspection or maintenance is done while the inspection cover is not fixed securely, there is a danger that the cover suddenly shuts and causes personal injury.
- When you close the cover after inspection and maintenance, be sure to lock it with the catch.
  If the machine is operated while the cover is not fixed, there is a danger that the cover opens.

Bleed Air from Hydraulic Circuit

When you repair or replace the hydraulic equipment, or remove the hydraulic piping, air must be bled from the circuit. For air bleeding, see Maintenance, “How to Bleed Air from Hydraulic System (4-47)”.

Precautions When You Install Hydraulic Hoses

- When the O-rings or gaskets are installed, clean the mounting surface and replace the old components with new ones.
  Be sure to install new O-rings and gaskets.
- When you connect the hoses, do not twist them or bend them too much. It can decrease the service life of the hose and cause damage.

Checks After Inspection and Maintenance

If you do not do the necessary checks after the inspection and maintenance, it can cause a failure and personal injury.

Make sure of the safety, examine the items that follow, and strictly obey them.

Checks after operation (with engine stopped)

- All the inspection and maintenance items are completed.
- Make sure that there is no tool or part fallen in the machine. (It is very dangerous if the parts are in the machine and get caught in the lever linkage mechanism.)
- No leakage of water or oil is found.
- All the nuts and bolts are fully tightened.

Checks while the engine is in operation

For the checks when the engine is in operation, see Safety, “Two Workers are Required for the Maintenance When the Engine is in Operation (2-46)” and secure the safety fully.

- No leakage of fuel or oil is found while the engine speed increases.
- The inspected and serviced area is normally operated.

Select Lubricants by Ambient Temperature

Use a fuel or lubricant that agrees with the ambient temperature.

For details, see “Recommended Fuel, Coolant, and Lubricant (7-6)”.

Lock Covers

When you close the cover after inspection and maintenance, be sure to lock it with the catch.

If the machine is operated while the cover is not fixed, there is a danger that the cover opens.

Precautions When You Clean Work Equipment Control Lever

- If oil or detergent attaches on the resin parts which are used at the knob of work equipment control lever of the hydraulic excavator, they will become hard in a short time. Because of the hardening, you cannot push the lever switch. Be careful not to let oil attach to the work equipment control lever.
- If dirt is attached on the work equipment control lever, clean it with a dry cloth or a cloth wet with water or warm water. Do not use a detergent because oil or detergent can cause deterioration.

Outline of Maintenance

- Komatsu recommends using Komatsu genuine parts for replacement parts, grease or oil.
- When changing the oil or adding oil, do not mix different types of oil. When changing the type of oil, drain all the old oil and fill completely with the new oil. Always replace the filter at the same time. (There is no problem if the small amount of oil remaining in the piping mixes with the new oil.)
- Unless otherwise specified, when the machine is shipped from the plant, it is filled with the oil and coolant listed in the table below.

Item	Type
Engine oil pan	Engine oil EO15W40-LA (Komatsu genuine)
Swing machinery case	Power train oil TO30 (Komatsu genuine)
Final drive case	
Hydraulic oil system	Hydraulic oil HO56-HE (Komatsu genuine)
Radiator	Non-Amine Engine Coolant (AF-NAC) (Komatsu genuine) (density: 30% or above)

Handle Oil, Fuel, Coolant, and Do Oil Clinic

Oil

- Oil is used in the engine and hydraulic equipment under extremely severe conditions (high temperature, high pressure), and deteriorates with use.
  Always use oil that matches the grade and maximum and minimum ambient temperatures recommended in Operation and Maintenance Manual.
  Even if the oil is not dirty, always change the oil at the specified interval.
- Oil corresponds to blood in the human body, always be careful when handling it to prevent any impurities (water, metal particles, dirt, etc.) from getting in.
  The majority of failures with the machine are caused by the entry of such impurities.
  Take particular care not to let any impurities get in when storing or adding oil.
- Never mix oils of different grades or brands.
- Always add the specified amount of oil.
  Having too much oil or too little oil are both causes of failures.
- If the oil in the work equipment is not clear, there is probably water or air getting into the circuit. In such cases, consult your Komatsu distributor.
- When changing the oil, always replace the related filters at the same time.
- We recommend that you have an oil analysis periodically to check the condition of the machine. For those who wish to use this service, consult your Komatsu distributor.
- When using commercially available oil, it may be necessary to reduce the oil change interval. We recommend that you use the Komatsu oil clinic to check the characteristics of the oil in detail.

NOTICE

Komatsu recommends using Komatsu genuine engine oil for KDPF. If engine oil other than Komatsu genuine oil for KDPF is used, it may shorten cleaning interval of KDPF filters, adversely affect the engine such as deteriorated oil may reduce lubricating function, and it may cause failure, shortening of the machine life, lowering of performance and increase of fuel consumption.

Fuel

- To prevent water formation inside the fuel tank because of condensation caused by the moisture in the air, fill the tank with fuel after the day's work is completed.
- The fuel pump is a precision instrument. If fuel which contains water or dirt is used, it cannot work correctly.
- Be very careful not to let foreign material get in when you store or add fuel.
- Be sure to use the fuel that agrees with the temperature as in the Operation and Maintenance Manual.
  - If the fuel is used at the temperatures lower than the specified temperature (particularly at temperatures below -15 °C{5 °F}), the fuel will solidify.
  - If the fuel is used at temperature higher than the operating temperature, the viscosity will decrease, and it can result in failures such as a drop of output.
- Before you start the engine, or after 10 minutes of refuel, drain the sediment and water from the fuel tank.
- When you run out of fuel or replace the filters, it is necessary to bleed air from the circuit.
- If foreign material is mixed in the fuel tank, clean the tank and fuel system.

NOTICE

Be sure to use the ultra-low sulfur diesel fuel.
To get good fuel consumption properties and exhaust gas properties, the engine mounted on this machine uses an electronically controlled high-pressure fuel injection system and emission gas control system (KDPF). The high-pressure fuel injection device requires high precision parts and lubrication. If low viscosity fuel with low lubrication quality is used, its durability can decrease significantly. Also, if fuel with high sulfur content is used, it can deteriorate the engine parts and KDPF catalyzer, and can cause failures, decrease of the service life, and degradation in performance.

Bio-Fuel

The biofuel is a fuel that is formed in a transesterification reaction of vegetable oil, animal fat, and edible oil.

The ASTM D975 diesel fuel can contain 5 % or less of biofuel.

Use the biofuel conforming to ASTM D7467 if its mixing ratio is between 6% to 20%.

The EN590 diesel fuel can contain 7 % or less of biofuel.

When you use 100% biofuel for mixing, it needs to conform to ASTM D6751 or EN14214.

In the United States, purchase the biofuel from the dealer certified by BQ-9000.

In the EU, purchase the biofuel from the member companies of European Biodiesel Board (EBB).

In other countries or regions, purchase the biofuel from the dealer that guarantees the same quality as BQ-9000 or EBB.

NOTICE

When you use biofuel other than the preceding diesel fuel and its mixing ratio is up to 20 %, obey the precautions that follow.

- **It is necessary to consult with the local regulatory authorities of engine exhaust gas regulation whether the biofuel can be used or not.**
- **The fuel can possibly leak because of the deterioration of rubber material of the fuel hose.**
  Replace it with the fuel hose applicable for biofuel. Consult your Komatsu distributor for replacement of the fuel hose.
- **Biofuel cannot be stored for a long time because it is easy to deteriorate and change in quality.**
  Use the fuel in the storage tank or the fuel tank of the machine within 6 months.
  If the deteriorated and altered biofuel is used, it can cause bad effects on the engine parts.
  When you store the machine which uses the diesel fuel mixed with the biofuel for more than 3 months, do the procedure that follows.
  - **Replace it with pure diesel fuel or the new diesel fuel mixed with the biofuel at the lowest possible mixing ratio.**
  - **After you change the fuel, run the engine for a minimum of 30 minutes before you store the machine.**
- **Because the biofuel dissolves the materials sticking to the fuel tank and fuel line, the fuel filter can be clogged with them.**
  When you change the diesel fuel to the biofuel, replace the fuel main filter cartridge and fuel prefilter cartridge with new ones. When you replace the fuel main filter cartridge and fuel prefilter cartridge, make the replacement interval half the normal time until the second replacement after you change the diesel fuel to the biofuel.
- **Because the biofuel absorbs moisture easily, it can possibly cause a growth of microorganism.**
  When the microorganism grows in the biofuel, it can cause corrosion of the fuel system and the clogging of the fuel filter.
  Drain the water from the fuel tank before you start the operation.
  When you complete the operation, fill the fuel tank to reduce the air layer.
- **If the biofuel is used in the conditions of the specific operation, the fuel can possibly get mixed into the engine oil.**
  The fuel level in the engine oil must not exceed 5 %. Deteriorated engine oil can cause adverse effects on the engine parts such as a reduction of lubricating function. It is recommended to take a sample of the oil on a periodic basis.
- **The characteristics of the biofuel change when outside air temperature is low. The fuel filter can be clogged and the fuel inside the fuel tank can be solidified. Store the biofuel in the warm building or in the storage tank.**

Ash is easy to be accumulated in KDPF when the biofuel is used. Thus, the regeneration of KDPF can possibly become more frequent if the mixing ratio of the biofuel is high.

The energy density of the biofuel becomes lower by 7 to 10% with that of the diesel fuel. Fuel consumption and output can possibly be lowered when the mixing ratio is high.

Fuel hose quality can change as time passes due to the influence of material of bio when using BDF that mixing ratio is over 20% and they are likely to wear out or deteriorate.

Strongly recommend to replace Fuel hose every 2 years or every 4000 hours, whichever comes sooner.

Paraffin-based Fuel

The paraffin-based fuel is generated by natural gas, coal, vegetable oil, and animal and plant fat, and its main constituent is paraffin.

The paraffin-based fuel has almost the same characteristics as the diesel fuel.

Vegetable oil and fat-derived fuel are called renewable diesel (RD) and hydrogenated vegetable oil (HVO).

The fuel synthesized from natural gas is called gas-to-liquid (GTL).

NOTICE

Use the paraffin-based fuel which agrees with EN15940:2016 and ASTM D975.
As long as the fuel agrees with EN15940:2016 and ASTM D975, its mixing ratio can be up to 100%.

The energy density of the paraffin-based fuel becomes lower up to 10% with that of the diesel fuel. Thus, fuel consumption and output can possibly be lowered.

Coolant and Water for Dilution

- The coolant has the important function of preventing corrosion as well as preventing freezing.
  Even in the areas where freezing is not an issue, the use of coolant is essential.
  Komatsu machines are supplied with Non-Amine Engine Coolant (AF-NAC). Non-Amine Engine Coolant (AF-NAC) has excellent anti-corrosion, antifreeze and cooling properties and can be used continuously for every 3 years or every 6000 hours whichever occurs first in the below listed conditions.
  Conditions to meet every 2 years or 4000 hours to extended coolant life:
  - Must pass coolant test/analysis at 4,000 hours, the test interval is a precautionary procedure intended to prevent cooling and engine system damage.
  - All maintenance top offs and refills were done with Komatsu approved non-Amine (AF-NAC) coolant.

  For more information (e.g. test method) on the Coolant test/ Analysis, consult an authorized Komatsu Distributor.
  Komatsu recommends the use of Non-Amine Engine Coolant (AF-NAC). If you use another coolant, it may cause serious problems, such as corrosion of the engine and aluminum parts of the cooling system.
- When using antifreeze, always observe the precautions given in Operation and Maintenance Manual.
- Do not move undiluted coolant near fire. It is flammable.
- The coolant density needs to be changed according to the ambient temperature.
  Even in areas where it is not considered necessary to prevent freezing, always use Non-Amine Engine Coolant (AF-NAC) with a density of over 30 % in order to prevent corrosion of the cooling system.
  Non-Amine Engine Coolant (AF-NAC) is diluted with distilled water that does not contain any ions or water-hardening substances. Never dilute with water.
- If the engine overheats, wait for the engine to cool before adding coolant.
- If the coolant level is low, it will cause overheating, and will also cause problems with corrosion due to air entering the coolant.

DEF

- If DEF gets on your skin, it may cause inflammation. Immediately take the contaminated clothes or shoes off and wash it off with water. In addition, use a soap to wash it off thoroughly. If your skin becomes irritated or begins to hurt, immediately consult a doctor for treatment.
- Do not induce vomiting if swallowed. If swallowed, thoroughly rinse mouth with water and consult a doctor for treatment.
- Avoid contact with the eyes. If there is contact, flush with clean water for several minutes and consult a doctor for treatment.
- Wear protective eyeglasses when exposed to DEF to protect from solution splashing in your eyes. Wear rubber gloves when you perform work handling DEF to avoid skin contact.
- When opening the cap of DEF tank of the machine, the ammonia vapor may escape. Keep your face away from the filler port.
- Do not put fluid other than DEF into DEF tank. If diesel fuel or gasoline is added into the tank, it can cause a fire. Some fluids or agents added can create and emit a toxic gas.
- DEF is non-flammable; however, in the case of a fire it may generate an ammonia gas.
- If DEF is spilled, immediately wash and clean the area with water. If spilled DEF is left unattended and the area is not washed and cleaned, it can cause corrosion to the contaminated area and emit toxic gas.
- When disposing of DEF, treat it as an industrial waste. The container for DEF is an industrial waste as well. It should be treated in the same way.
- Never use an iron or aluminum container when disposing DEF, because toxic gas may develop and a chemical reaction may corrode the container. Use a container made of resin (PP, PE) or stainless steel when handling the fluid waste of DEF.

NOTICE

If you add any additional additive agents or water to DEF, the devices in the Urea SCR system may be defective, and conformance to the exhaust gas regulations will be lost.

Grease

- Grease is used to prevent seizure and noises at the joints.
- This construction equipment is used under heavy-duty conditions. Komatsu recommends using the recommended grease and follow the replacement intervals and recommended ambient temperatures given in this Operation and Maintenance Manual.
- Grease fittings not included in the periodic maintenance section are the grease fittings for overhaul, so they do not need grease.
  If any part becomes stiff after being used for long time, add grease.
- Always wipe off all of the old grease that is pushed out when greasing.
  Be particularly careful to wipe off the old grease in places where sand or dirt sticking in the grease would cause wear of the rotating parts.

KOWA (Komatsu Oil Wear Analysis)

KOWA is a maintenance service to collect oil and analyze it regularly. It finds wear of the machine drive parts or other failures in a short period to prevent machine failure and downtime.

KOWA Analysis Items

Measurement of metallic powder concentration

An ICP (Inductively Coupled Plasma) analyzer is used to measure the concentration of iron, copper, and other metal powder in the oil.

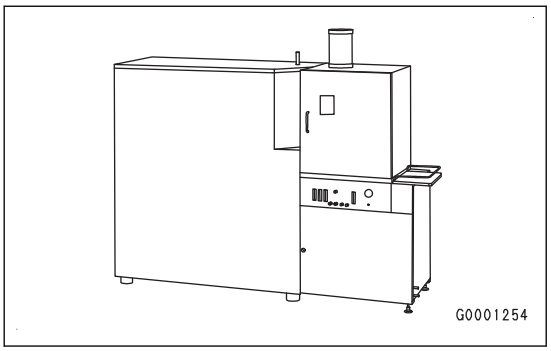

Measurement of quantity of iron particles

A PQI (Particle Quantifier Index) measuring instrument is used to measure the quantity of iron particles of 5 μm or more.

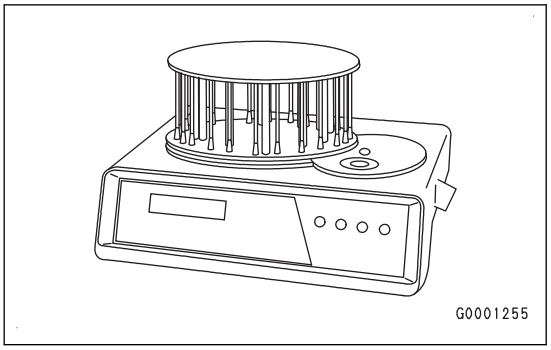

Other

Measure the items such as the ratio of water, coolant, fuel in the oil, and dynamic viscosity.

Oil Collection Interval

Every 500 hours

Precautions When You Collect Oil

⚠ WARNING

To prevent the machine movement during the work, make sure that the machine is in the conditions that follow before you start the work.

- **The machine is stopped on a level ground.**
- **The work equipment is lowered to the ground and kept in a stable condition.**
- **The lock lever is in the LOCK position.**
- **The engine is stopped.**

⚠ CAUTION

- **Wait for the temperature of the machine to go down, and then start the work. Immediately after the engine is stopped, the parts and oil are very hot and they can cause burn injury.**
- **When you collect oil, use the protective equipment such as protective eyeglasses. Oil can get around and it can cause personal injury.**

To do the KOWA effectively, the oil must be collected in the correct procedure. Obey the precautions that follow.

- If oil is cool, it can cause the incorrect result of the troubleshooting. Collect oil when it is warm such as during lunch time or after the work is completed.

- Mix oil sufficiently, and then collect oil directly from the machine.
- Collect oil in the same condition and state every time.
- Be careful not to let mud, oil, or water attach around the bottle, hose, or sampling valve.
- Do not collect oil in strong winds or rain as far as possible. If you need to collect oil in strong winds or rain, be sure to prevent entry of dirt or rain to the sample oil.
- Do not collect oil in a dusty area as far as possible. If you need to collect oil in such conditions, be sure to prevent entry of dirt to the sample oil.
- Do not collect oil from the drain part. Collect oil from the oil inspection part, oil filler part, or sampling valve. If drained oil is used, it can cause the incorrect result of the troubleshooting.
- When the hose is connected to the sampling valve, drain oil in the hose, and then collect oil.

How to Collect Oil with Sampling Valve

- You can reduce the work time if you collect oil from the sampling valve with the sampling tool.
- Insert the needle of the sampling tool into the sampling valve at a right angle to use.
- To purchase a sampling tool, consult your Komatsu distributor.

Sampling Tool and Oil Flow

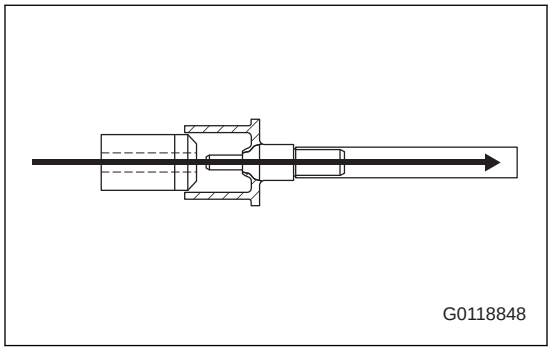

How to Collect Coolant

Items to be prepared

- Sampling tool
- Container to store sample coolant

1. Open the cover (1) at the left side of the machine.
2. Start the engine.
3. Set the fuel control dial to the Low idle (MIN) position.
4. Prepare a sampling tool and container to store the sample coolant.

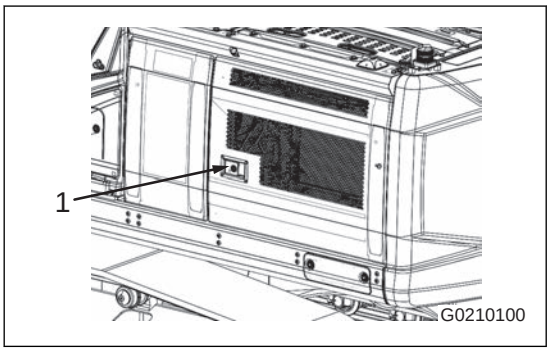

5. Remove the cap (2) of the coolant sampling valve.
6. Before the collection, clean the coolant sampling valve area and make sure that there is no oil, dirt, or water on it.

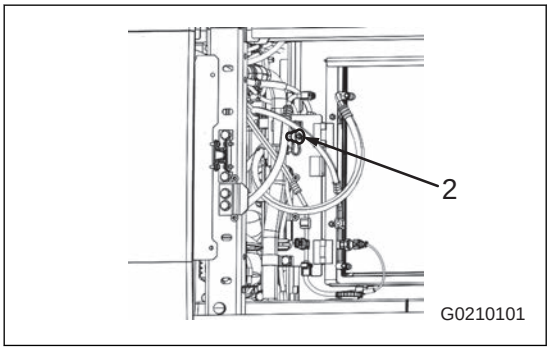

7. Hold the container to store coolant with your hand, and hold the needle of the sampling tool with the other hand.
8. Insert the needle of the sampling tool into the sampling valve, and collect coolant.

CAUTION

Insert the needle of the sampling tool slowly and carefully. Coolant can flow out from the bottle suddenly.

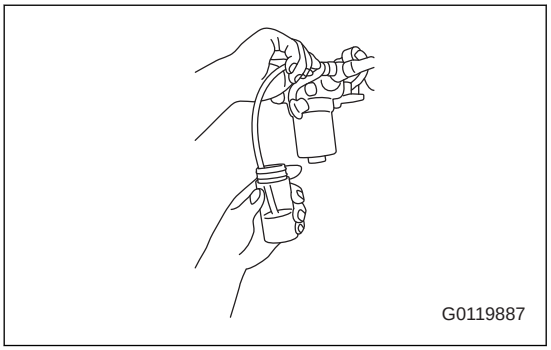

9. Tighten the cap of the container to store coolant.
10. Clean the coolant sampling valve, and install the cap (2).
11. Close the cover (1) at the left side of the machine.
12. Stop the engine.

Oil and Fuel Storage

- Keep the oil and fuel indoors to prevent entry of foreign material such as water or dirt.
- When you keep the fuel or oil in drum can for a long period, put it on its side, and make sure that the filler port of the drum can comes below the liquid surface to prevent entrainment of humidity. If it is necessary to store them outdoors, cover them with waterproof sheet.
- To prevent deterioration of the quality during long-term storage, be sure to use in the order of first in - first out (use the first purchased oil or fuel first).

Store DEF

- When you store the DEF, fully seal up its container. Open the containers in a well-ventilated area.
- For DEF storage, prevent direct sunlight and use the original container. Especially, do not change the container to the iron or aluminum ones. Poisonous gas can occur and a chemical reaction can corrode the container.
- The relationship between the upper limit of storage temperature and the storage period of DEF is shown in the table.

Temperature of storage area	Storage period
10 °C {50 °F} or less	36 months and less
25°C {77°F} or less	18 months and less
30°C {86°F} or less	12 months and less
35°C {95°F} or less	6 months and less

*: Do not store DEF in the temperature of 35 °C {95 °F} or more.

Filter

- The filters remove the foreign materials in the oil, fuel, and air circuits to prevent machine failure.
  Replace all the filters regularly. For details, see Operation and Maintenance Manual.
  But if the operation environment is dangerous or if you use oil that is different from genuine Komatsu products or fuel contains high ratio of sulphur, reduce the replacement interval.
- Cartridge type filter cannot be used again even it is washed.
  Replace it in response to the maintenance procedure.
- If the oil filter has been replaced, make sure that no foreign material is found in the used filters.
  If the foreign materials are found, consult your Komatsu distributor.
- Do not open the packages of spare filters until just before they are to be used.
- Komatsu recommends the use of Komatsu genuine filters.

Battery Terminal

- Make sure that the battery terminals have no looseness or corrosion.
- If there is looseness, make sure that there is no damage or corrosion, and retighten it.
- For the procedure to retighten and the torques, etc., see “Procedures When Battery is Discharged (3-549)”.
- If there is corrosion, fully clean the rust on the battery and battery cable, and replace the battery terminals.
- When you replace the battery terminals, obey the instructions given in “Precautions for Maintenance (2-44)”.

Electrical Components

⚠ WARNING

- **When the battery disconnect switch key is turned to the OFF position for the maintenance work, be sure to pull out the key and keep it with you. If the key is left in the switch, it can be turned on by mistake and it can cause an electric shock.**
  For the operation of the battery disconnect switch, see “Battery Disconnect Switch (3-169)”.
- **Do not clean the inner side of the operator's compartment with water. There is a danger that the electrical leakage causes malfunction if the electrical component becomes wet and its coating has damage. Be careful not to let water get into the electrical components when you clean the machine.**
- **If you add or remove an electrical component or device, contact your Komatsu distributor. A malfunction or fire could occur.**

- When it is raining or after you clean the machine, if the water drops stuck around connectors, wipe them off before you remove the connectors of the electrical components. Be careful to prevent entry of water into the connector.
- Make sure that the caps are installed correctly for the terminals and connectors with caps.
- The inspection and maintenance include checks for belt tension, damage of belt, and battery fluid level.
- When you install the wireless devices to the machine, consult your Komatsu distributor first. There is a danger that the radio waves received and transmitted by wireless devices causes malfunction in the controller of the control system.
- When you operate the machine near the sea, clean all electrical components to prevent corrosion.
- When you install the electrical component, connect it to the specified power supply connector.
  Do not connect the optional power supply to the fuse, starting switch, or battery relay.

Standard Torque

⚠ CAUTION

If you tighten the parts by other than the specified tightening torque, the parts can have damage or being loosened, and the machine failures or operating problems can be caused.

Torque List for Bolts and Nuts

Unless otherwise specified, tighten the metric nuts and bolts to the torque shown in the table.

When you replace the bolts or nuts, Komatsu recommends the use of Komatsu genuine part of the same size as before replacement.

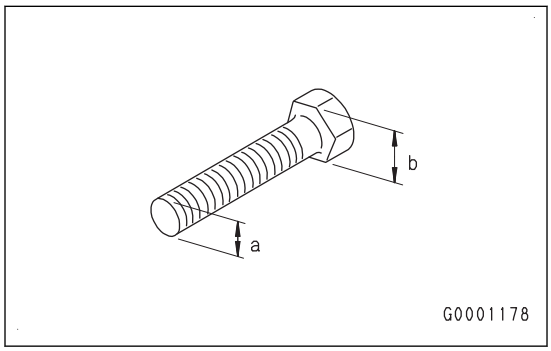

Outside diameter of the thread part "a" (mm {in})	Width across flats "b" (mm {in})	Tightening torque (Nm {kgfm, lbft})	
		Target value	Allowable range
6 {0.236}	10 {0.394}	13.3 {1.35, 9.76}	11.8 to 14.7 {1.2 to 1.5, 8.68 to 10.8}
8 {0.315}	13 {0.512}	31 {3.2, 23.1}	27 to 34 {2.8 to 3.5, 20.3 to 25.3}
10 {0.394}	17 {0.669}	67 {6.8, 49.2}	59 to 74 {6 to 7.5, 43.4 to 54.2}
12 {0.472}	19 {0.748}	111 {11.3, 81.7}	98 to 123 {10 to 12.5, 72.3 to 90.4}
14 {0.551}	22 {0.866}	172 {17.5, 127}	153 to 190 {15.5 to 19.5, 112 to 141}
16 {0.63}	24 {0.945}	260 {26.5, 192}	235 to 285 {23.5 to 29.5, 170 to 213}
18 {0.709}	27 {1.063}	360 {37, 268}	320 to 400 {33 to 41, 239 to 297}
20 {0.787}	30 {1.181}	510 {52.3, 378}	455 to 565 {46.5 to 58, 336 to 420}
22 {0.866}	32 {1.26}	688 {70.3, 508}	610 to 765 {62.5 to 78, 452 to 564}
24 {0.945}	36 {1.417}	883 {90, 651}	785 to 980 {80 to 100, 579 to 723}
27 {1.063}	41 {1.614}	1295 {133, 962}	1150 to 1440 {118 to 147, 853 to 1060}
30 {1.181}	46 {1.811}	1715 {175, 1270}	1520 to 1910 {155 to 195, 1120 to 1410}
33 {1.299}	50 {1.969}	2205 {225, 1630}	1960 to 2450 {200 to 250, 1450 to 1810}
36 {1.417}	55 {2.165}	2745 {280, 2030}	2450 to 3040 {250 to 310, 1810 to 2240}
39 {1.535}	60 {2.362}	3260 {333, 2410}	2890 to 3630 {295 to 370, 2130 to 2680}

Torque List for Hoses

Tighten the hoses to the torque shown in the table.

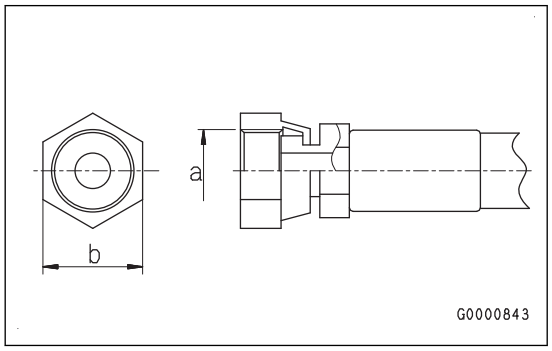

Face Seal

Hose nominal number	Nominal - Threads per inch "a"	Width across flats "b" (mm {in})	Tightening torque (Nm {kgfm, lbft})	
			Target value	Allowable range
02	$^{9}/_{16}$-18UN	19 {0.748}	44 {4.5, 32.5}	34 to 54 {3.5 to 5.5, 25.3 to 47}
03	$^{11}/_{16}$-16UN	22 {0.866}	74 {7.5, 54.2}	54 to 93 {5.5 to 9.5, 39.8 to 68.7}
04	$^{13}/_{16}$-16UN	27 {1.063}	103 {10.5, 75.9}	84 to 132 {8.5 to 13.5, 61.5 to 97.6}
05	1-14UNS	32 {1.26}	157 {16.0, 116}	128 to 186 {13.0 to 19.0, 94 to 137}
06	$1^{3}/_{16}$-12UN	36 {1.417}	216 {22.0, 159}	177 to 245 {18.0 to 25.0, 130 to 181}
10	$1^{7}/_{16}$-12UN	41 {1.6}	270 {27.5, 199}	240 to 300 {24.5 to 30.5, 177 to 221}

Maintenance Schedule

- If a hydraulic breaker is installed to the machine, the maintenance interval for some parts are different. See “Maintenance Interval for Hydraulic Breaker (4-19)”, and find out the maintenance interval before you start the maintenance.
- When you use the engine oil for cold districts, the maintenance intervals of the engine oil and filter cartridge are changed to every 500 hours.
- Consult your Komatsu distributor to change the maintenance interval of the machine monitor.
- If the interval (daily, weekly, monthly) is specified, lubricate it at the interval that comes first.
  - Interval specified by the service meter
  - Specified interval

Maintenance Schedule Table

Every 10 Hours Before Initial 50 Hours Maintenance or Daily Maintenance 4-20
When Required 4-20
How to Examine, Clean and Replace Air Cleaner 4-20
Clean Inside of Cooling System 4-26
How to Examine Looseness and Tighten Track Shoes Bolts 4-31
How to Examine and Adjust Track Tension 4-31
Replace Bucket Teeth (Vertical Pin Type) 4-33
Replace Bucket Teeth (Horizontal Pin Type) 4-36
Adjust Bucket Clearance 4-37
How to Examine Window Washer Fluid Level, Add Fluid 4-38
How to Examine Wiper Blade 4-39
How to Replace Front Window Wiper Blade 4-39
How to Replace Lower Window Wiper Blade 4-40
How to Examine and Do Maintenance Air Conditioner 4-41
Wash Washable Floor 4-42
How to Examine Gas Spring 4-46
How to Bleed Air from Hydraulic System 4-47
How to Examine Camera Visibility 4-49
How to Lubricate Roller at Cab Front Window 4-50
Clean Air Conditioner Fresh/Recirc Filters 4-50
Examine Before You Start Operation 4-51
Every 100 Hours Maintenance or Weekly Maintenance 4-52
How to Lubricate Work Equipment 4-52
Every 250 Hours Maintenance or Monthly Maintenance 4-53
How to Examine Battery Electrolyte Level 4-53
Every 500 Hours Maintenance 4-56
How to Lubricate 4-56
How to Replace Fuel Prefilter Cartridge 4-58
How to Examine Swing Pinion Grease Level, Add Grease 4-61
How to Lubricate Swing Circle 4-61
How to Examine and Clean Radiator Fins, Oil Cooler Fins, Aftercooler Fins and Air Conditioner Condenser Fins 4-62
How to Clean Air Conditioner Fresh/Recirc Filters 4-65
How to Examine Oil Level in Swing Machinery Case, Add Oil 4-67
How to Examine Oil Level in Final Drive Case, Add Oil 4-68
How to Examine for Looseness of Work Equipment Wiring Clamp, Hardening of Rubber 4-69
How to Examine and Clean Cylinder Stroke Sensor Case Bolt 4-69
How to Examine Battery and Indicator of Komatsu Maintenance-Free Battery 4-69
How to Examine and Adjust Air Conditioner Compressor Belt Tension 4-71
Every 1000 Hours Maintenance 4-73
How to Change Oil in Engine Oil Pan and Replace Engine Oil Filter Cartridge 4-73
How to Change Oil in Swing Machinery Case 4-74
How to Examine Oil Sump in Flywheel Housing 4-75
How to Replace Fuel Main Filter Cartridge 4-76

How to Examine All Tightening Points of Engine Intake Pipe Clamps 4-78
How to Examine and Release Nitrogen Gas Charge Pressure in Accumulator (For Breaker) 4-78
How to Replace Hydraulic Tank Breather Element 4-79
How to Replace DEF Tank Breather Element 4-80
How to Examine Fan Belt Tension and Auto-Tensioner and Replace Auto-Tensioner 4-81
Every 2000 Hours Maintenance 4-82
How to Change Oil in Final Drive Case 4-82
How to Examine Function of Accumulator for Control Circuit and Release Internal Pressure in Hydraulic Circuit 4-83
How to Examine Alternator 4-86
How to Examine and Adjust Engine Valve Clearance 4-86
How to Replace DEF Filter 4-86
Every 3000 Hours Maintenance 4-89
How to Replace Hydraulic Oil Filter Element 4-89
How to Clean Hydraulic Tank Strainer 4-91
Every 4000 Hours Maintenance 4-92
How to Examine Water Pump 4-92
How to Examine Starting Motor 4-92
How to Replace Accumulator (For Control Circuit) 4-92
How to Examine Operation of Air Conditioner Compressor 4-93
How to Examine for Looseness of Engine High-Pressure Piping Clamp, Hardening of Rubber 4-93
How to Examine for Missing Fuel Spray Prevention Cap, Hardening of Rubber 4-94
Replace Expansion Tank Cap 4-95
How to Examine Exhaust Pipe Cover 4-96
Every 4500 Hours Maintenance 4-97
How to Clean DEF Tank 4-97
How to Replace DEF Tank Filler Port Filter 4-97
Every 6000 Hours Maintenance 4-100
How to Change Oil in Hydraulic Tank 4-100
Every 8000 Hours Maintenance 4-102
How to Replace Fuel Spray Prevention Cap 4-102
How to Clean KDPF 4-102
Every 9000 Hours Maintenance 4-102
How to Replace DEF Hose 4-102
Every 6 Months Maintenance 4-103
How to Examine Anchor Point for Tie-off 4-103

Maintenance Interval for Hydraulic Breaker

For machines with hydraulic breaker, set the maintenance intervals as follows. The hydraulic oil and grease deteriorate during the digging operation with the hydraulic breaker faster than during normal bucket digging operation.

Replace hydraulic oil filter element

For a new machine, replace the element after the first 100 to 150 hours. After that, replace the element in response to the table.

Change oil in hydraulic tank

Change oil as shown in the table.

Replace additional filter element for breaker (if equipped)

When you use the breaker, replace the element every 250 hours.

Replace pilot filter element (if equipped)

Replace the element as shown in the table.

X : Operating ratio of breaker (%)
Y : Replacement interval (H)
(A):Element of pilot filter
(B):Hydraulic oil
(C):Element of hydraulic tank

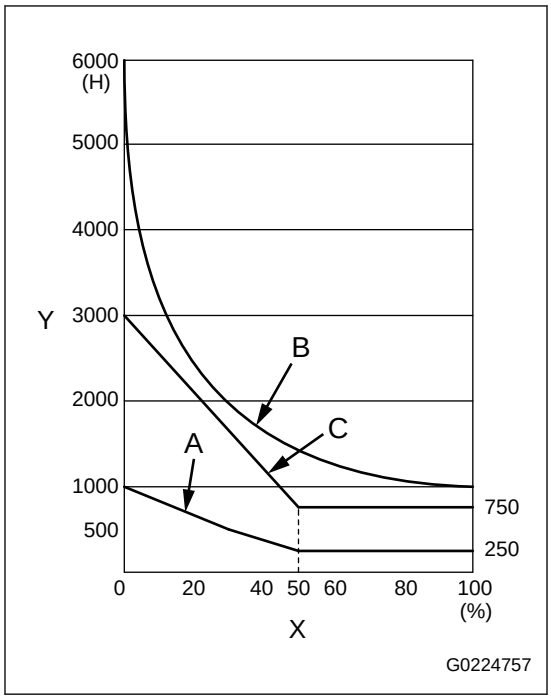

Monitor display

The remaining time after the next replacement shown on the monitor is subtracted in response to the usage of the breaker.

REMARK

Breaker operating ratio 100 % is the case when only the breaker is used.
Breaker operating ratio 0 % is the case when the breaker is not used.

Lubricate

Lubricate every 100 hours when the hydraulic breaker is installed.

Maintenance Procedure

Every 10 Hours Before Initial 50 Hours Maintenance or Daily Maintenance

When you “lubricate work equipment”, select the faster timing from every 10 hours maintenance before initial 50 hours, or daily maintenance.

For the maintenance procedure, see Every 100 Hours Maintenance or Weekly Maintenance.

When Required

How to Examine, Clean and Replace Air Cleaner

⚠ WARNING

- **When using compressed air, there is a danger that dirt may scatter and cause personal injury. Always wear protective eyeglasses, dust mask, or other protective equipment.**
- **When removing the outer element from the air cleaner body, it is dangerous to pull it out by force. When working in high places or where the foothold is poor, be careful not to fall because of the reaction when pulling out the outer element.**

NOTICE

- **Do not clean the air cleaner element until the air cleaner clogging caution lamp on the machine monitor lights up. If the element is cleaned frequently before the air cleaner clogging caution lamp on the machine monitor lights up, the air cleaner will not be able to display its performance fully, and the cleaning efficiency will also go down.**
  In addition, during the cleaning operation, more dirt stuck to the element will fall inside the inner element.
- **If any dirt enters the engine, it can damage the engine. Be sure to stop the engine before checking, cleaning, or servicing the air cleaner. Do not check, clean, or service the air cleaner when strong wind is blowing or in a dusty place.**
  When replacing the inner element, take extreme care.
- **Replace the outer element if it is cleaned 6 times repeatedly or used throughout a year. Replace the inner element as well at the same time.**

How to Examine Air Cleaner

The air cleaner element clogging caution lamp shows the inspection timing of the air cleaner element.

Make sure that the air cleaner clogging caution lamp (1) on the machine monitor is on.
Clean the air cleaner element when the air cleaner clogging caution lamp comes on.

How to Clean Air Cleaner Outer Element

⚠ CAUTION

When you handle the hook, remove it while you support it with 2 fingers. If the hook is removed with a single finger, there is a danger that your finger will be caught because it bounces off.

NOTICE

- **Do not remove the inner element. If it is removed, dirt will go in and can cause an engine problem.**
- **Do not use the tool such as a screwdriver.**
- **When you clean the element, do not hit it or beat it against something.**
- **Before and after you clean the element, do not put or store it in direct sunlight.**

Clean the outer element as follows.

1. Open the rear door (1) at the left side of the machine, remove the hooks (2) (5 places), and remove the cover (3).

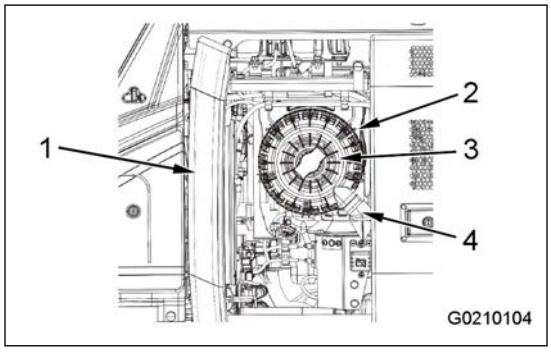

2. Hold the outer element (5), move it lightly up and down and to the right and left, and pull out the element.
3. When you remove the outer element (5), make sure that the inner element does not come out of position and is not tilted.

   If the inner element is tilted, push it in straight to the end by hand.
4. After you remove the outer element (5), protect the inner element (6) with a clean cloth or tape to prevent entry of dirt.

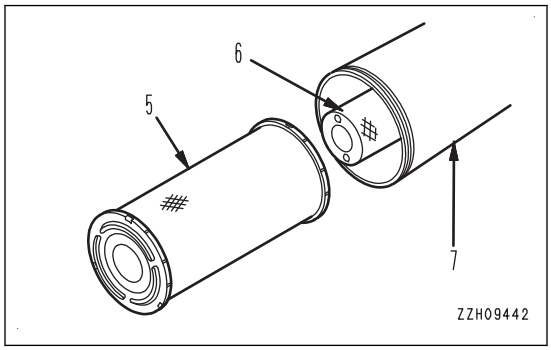

5. Remove dirt attached in the air cleaner body (7) and cover (3) with a clean cloth or brush.
6. If dirt is attached to the vacuator valve (4) installed to the cover (3), remove it.
7. When the outer element was cleaned 6 times or used for 1 year, replace it.
   - When replacement is required
     Replace the inner and outer elements with new ones. For details see “How to Replace Air Cleaner Element (4-24)”.
   - When replacement is not required
     Clean the outer element. Continue the cleaning procedure.

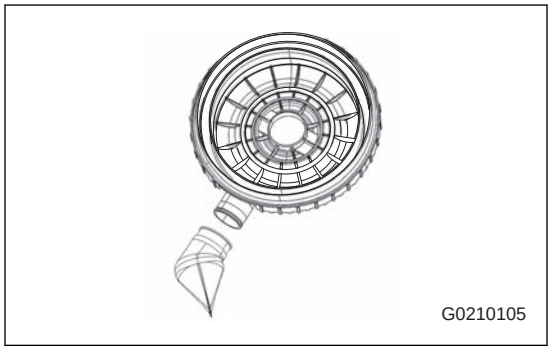

8. Blow dry compressed air (0.2 MPa {2.1 kgf/cm^2, 29.9 PSI} or less) from the inner side of the outer element along the pleats.
9. Blow along the pleats from the outer side, and then blow again from the inner side.

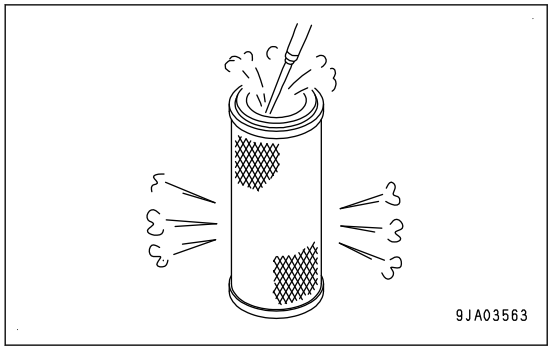

10. Use a marker to put a mark of cleaning count on the outer element surface for each cleaning of the element.

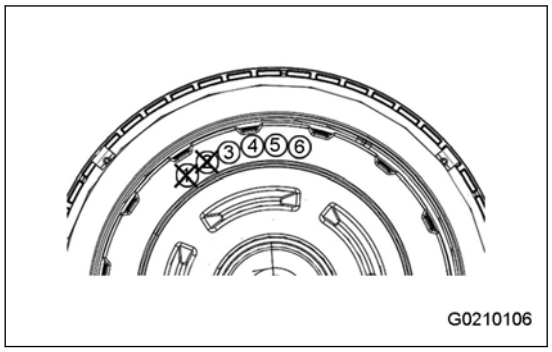

11. After cleaning, illuminate inner side of the element with an electric bulb to examine.

    If a small hole or thin part is found, replace the inner and outer elements. If a problem such as wet, deformation, breakage is found, replace the element (5) with a new one.
12. Remove the cloth or tape attached to the inner element (6).

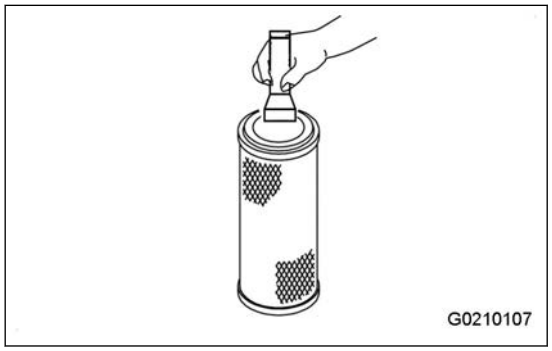

NOTICE

- **Do not use the element with the damage on the pleat, gasket, or seal with damage.**
- **If the element and O-ring are cleaned and used again after they are used for 1 year or more, it will cause problems. Do not use them again.**

13. Make sure that there is no dirt and oil on the seal part of the cleaned or new element, and wipe them off if found.

NOTICE

- **The air cleaner element must be installed in the correct direction.**
  Install the air cleaner element with the bottom surfaces (surface where no hole is drilled) (B) and (C) to the cover (3). If it is not installed in the correct direction, it can cause breakage of the air cleaner element or damage to the engine.
- **If you install the cover (3) by force with the hook (2) while the element is inserted into the body with the rubber at the end bulged or while the outer element is not pushed in straight, there is a danger that the hook and air cleaner body have damage. Be careful when you install it.**

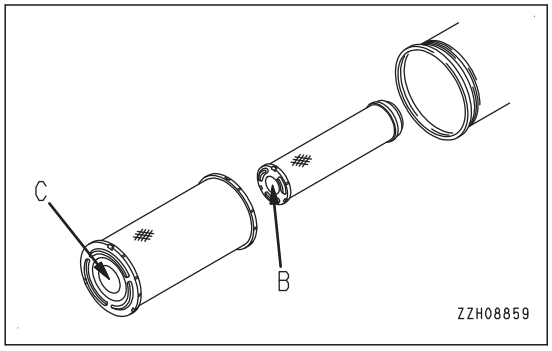

14. Push in the outer element straight with your hand into the air cleaner body.

    Rotate the outer element lightly, and insert it along the inner groove of the air cleaner body.

15. Install the cover (3) as follows.
    1) Make sure that the O-ring (8) is installed to the cover (3).
    2) Align the cover (3) with the element.

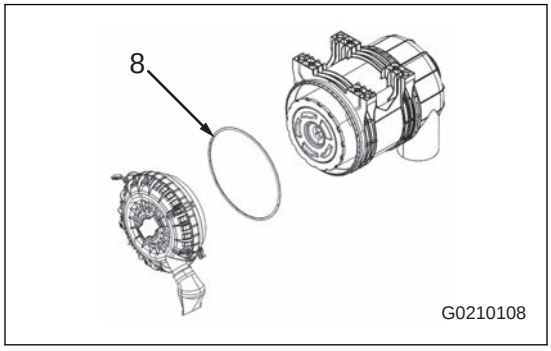

    3) Put the front end of the hook (2) to the protrusion of the air cleaner body, and lock it.
    4) Lock the hooks (2) in the diagonal sequence (top and bottom, right and left) in the same procedure as you tighten the bolts.

    NOTICE

    Pinch the hooks with 2 fingers, and lock it securely.

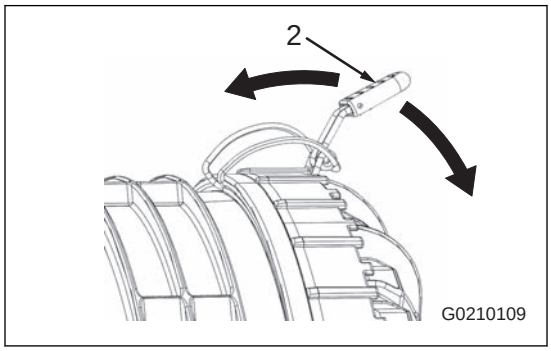

    5) Be sure to install the cover (3) with "↑TOP↑" mark at the top (A).
    6) When you install the cover (3), make sure that the clearance between the air cleaner body and cover (3) is not too large.

    If the clearance is too large, remove the cover (3), and then install it again.

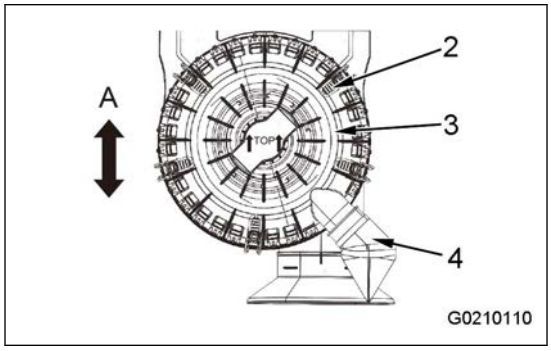

16. See the air cleaner clogging caution lamp on the machine monitor.

    If the lamp comes on immediately after the cleaning, replace the inner and outer elements.

How to Replace Air Cleaner Element

⚠ CAUTION

When you handle the hook, remove it while you support it with 2 fingers. If the hook is removed with a single finger, there is a danger that your finger will be caught because it bounces off.

NOTICE

- **Do not clean and use the inner element again. Replace the inner element with a new one at the same time when the outer element is replaced.**
- **If the outer element and cover are installed while the inner element is not installed correctly, the outer element can have damage.**
- **Do not use incorrect parts. The seal parts do not have sufficient precision, and it will cause entry of dirt, and cause damage to the engine.**

Replace the element as follows.

1. Open the rear door (1) at the left side of the machine, remove the hooks (2) (5 places), and remove the cover (3).

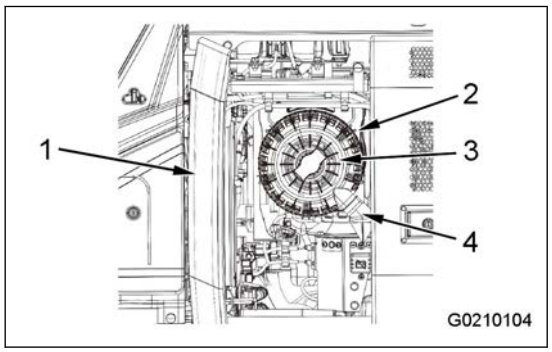

2. Hold the outer element (5), move it lightly up and down and to the right and left, and pull out the element.

   Do not remove the inner element (6) at this time.
3. When you remove the outer element (5), make sure that the inner element (6) does not come out of position and is not tilted.

   If the inner element is tilted, push it in straight to the end by hand.

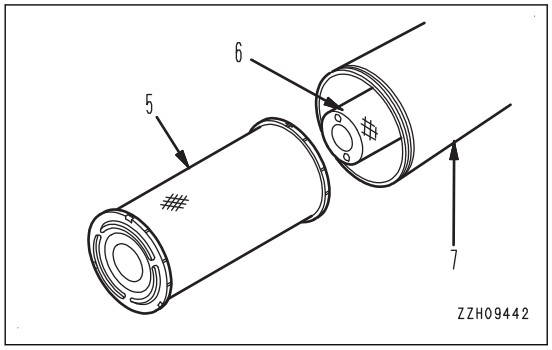

4. Remove dirt attached in the air cleaner body (7) and cover (3) with a clean cloth or brush.
5. If dirt is attached to the vacuator valve (4) installed to the cover (3), remove it.
6. Remove the inner element (6), and then quickly install the new inner element.

   Insert the inner element securely not to move.
7. Push the new outer element (5) in straight with your hand into the air cleaner body.

   Rotate the outer element lightly, and insert it along the inner groove of the air cleaner body.
8. Install the cover (3) as follows.

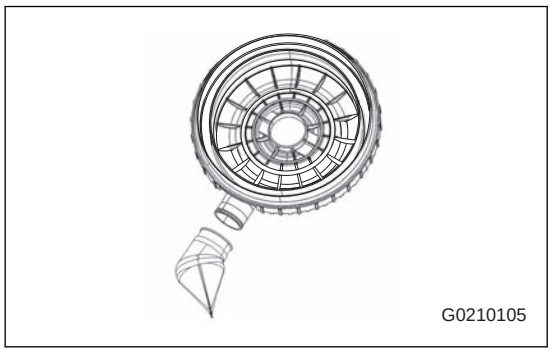

1) Make sure that the O-ring (8) is installed to the cover (3).
2) Align the cover (3) with the element.

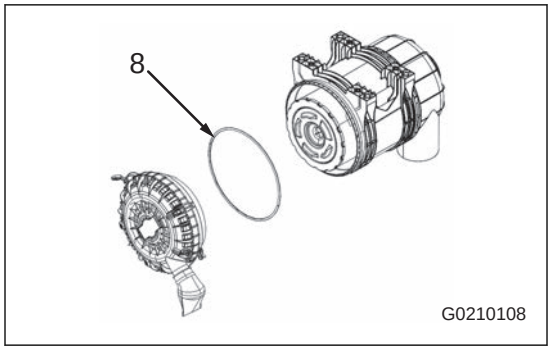

3) Put the front end of the hook (2) to the protrusion of the air cleaner body, and lock it.
4) Lock the hooks (2) in the diagonal sequence (top and bottom, right and left) in the same procedure as you tighten the bolts.

NOTICE

Pinch the hooks with 2 fingers, and lock it securely.

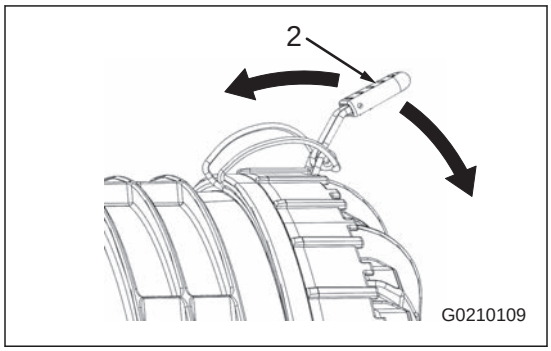

5) Be sure to install the cover (3) with "↑TOP↑" mark at the top (A).
6) When you install the cover (3), make sure that the clearance between the air cleaner body and cover (3) is not too large.

   If the clearance is too large, remove the cover (3), and then install it again.

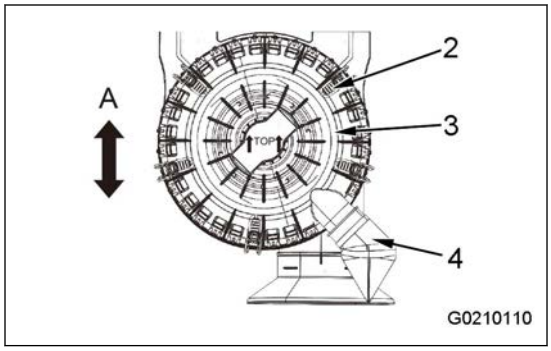

9. See the air cleaner clogging caution lamp on the machine monitor.

   If the lamp comes on immediately after the replacement, replace the inner and outer elements.

Examine and Replace Vacuator Valve

Check vacuator valve (4) for damage and deformation of its rubber portion.

If the vacuator is damaged or its rubber part is deformed, replace it with a new one.

Clean Inside of Cooling System

⚠ WARNING

- **Wait for the temperature of the machine to go down, and then start the work. Immediately after the engine is stopped, the cooling system is very hot and can cause burn injury.**
- **When you remove the cap from the expansion tank, wait for the temperature to go down, and turn the cap slowly to release the pressure, and remove the cap carefully. Immediately after the engine is stopped, the coolant is very hot and the pressure is accumulated in the expansion tank. If you remove the cap in this state, it can cause burn injury.**
- **Check that the conditions that follow are satisfied always before you stand up or go away from the operator's seat.**
  - **Each control lever is in the NEUTRAL position.**
  - **The lock lever is in LOCK position.**
- **When you do the cleaning, operate the engine. While the engine is in operation, keep away from the rear part of the machine. It is dangerous that you are behind the machine if the machine starts.**
- **Do not move undiluted coolant near fire. It is flammable.**
- **The coolant is poisonous. When you open the drain plug, be careful not to get coolant on you.**
  If coolant gets in your eyes or on your skin, clean the part with a lot of clean water, and consult a doctor immediately.
- **Consult your Komatsu distributor or a qualified company for the disposal of the cooling water which contains the coolant.**
  The coolant is poisonous. Do not put it into drainage ditches or drain it onto the ground surface.

- Stop the machine on a solid and level ground, and clean inside the cooling system or change the coolant.
  Clean inside the cooling system and change the coolant as in the table that follows.

Coolant	Cleaning of inside of cooling system and change of coolant
Non-Amine Engine Coolant (AF-NAC)	Every 3 years or 6000 hours (See below for condition), whichever comes sooner

- The coolant has the function to prevent corrosion and freeze.
  Although the machine is operated in an area where freeze is not an issue, use coolant.
  Komatsu machines are supplied with Non-Amine Engine Coolant (AF-NAC). Non-Amine Engine Coolant (AF-NAC) has excellent anti-corrosion, antifreeze and cooling properties and can be used continuously for every 3 years or every 6000 hours whichever occurs first in the below listed conditions (If other coolant than Komatsu approved non-Amine (AF-NAC) is used for refill or top off, the change interval is every 2 years or every 4000 hours whichever occurs first).
  Conditions to meet every 2 years or 4000 hours to extended coolant life:
  - Must pass "coolant test/analysis" at 4000 hours, the test interval is a precautionary procedure intended to prevent cooling and engine system damage
  - All maintenance top offs and refills were done with Komatsu approved non-Amine (AF-NAC) coolant

  Komatsu recommends the use of Non-Amine Engine Coolant (AF-NAC). If you use coolant that is not recommended, it can cause dangerous failure such as the corrosion of the cooling system or engine.
  To prevent corrosion of the cooling system, use the Non-Amine Engine Coolant (AF-NAC) of a density of 30% or more.
- Non-Amine Engine Coolant (AF-NAC) is mixed with distilled water.
  The coolant density is different by the ambient temperature. Find the lowest temperature in the past and select the correct density for the coolant as in the “Coolant density table” that follows.
  When you select the density for the coolant, set it for a temperature 10 °C {50 °F} lower than the actual lowest temperature in the jobsite.
  The coolant density is different by the ambient temperature, but it must be 30 % or more.

Coolant Density Table

Min. atmospheric temperature	℃	-10 or more	-15	-20	-25	-30	-35	-40	-45	-50
	℉	14 or more	5	-4	-13	-22	-31	-40	-49	-58
Density (%)		30	36	41	46	50	54	58	61	64

How to Clean Inside of Cooling System

Items to be prepared

- Containers that have sufficient capacity to collect the drained coolant
  (Refill capacity of coolant: 28.2 ℓ {7.45 US gal}
- A hose to add coolant
- Tap water (quantity in response to the mixing proportion of the specified quantity (for cleaning) and coolant)

1. Stop the engine.
2. Remove the 4 bolts (1), and remove the cover (2).

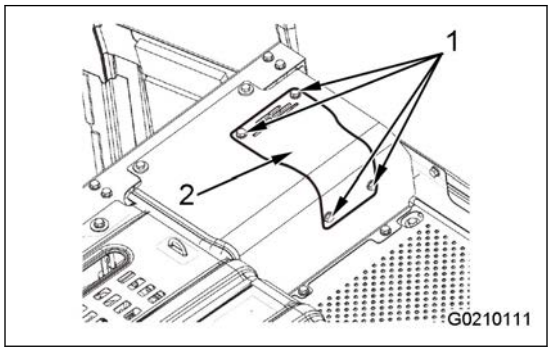

3. Make sure that the surface temperature of the expansion tank (3) is sufficiently low as you can touch it by bare hand, and turn the expansion tank cap (4) to release the internal pressure.

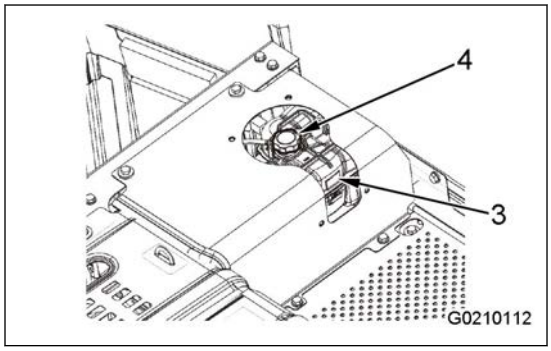

4. Remove the 4 bolts (5), remove the undercover (6), and put a container to receive coolant below the drain valve (7).

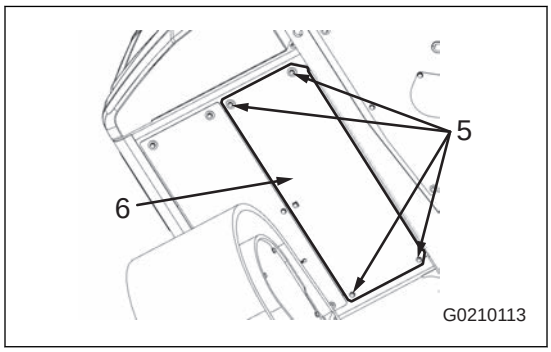

5. Open the drain valve (7) to drain coolant.
6. Close the drain valve (7).
7. Remove the expansion tank cap (4).
8. Add tap water until the expansion tank is filled.
9. Start the engine.

   To start the engine, see Operation, “Operations and Checks Before You Start Engine (3-231)” and “How to Start Engine (3-233)”.

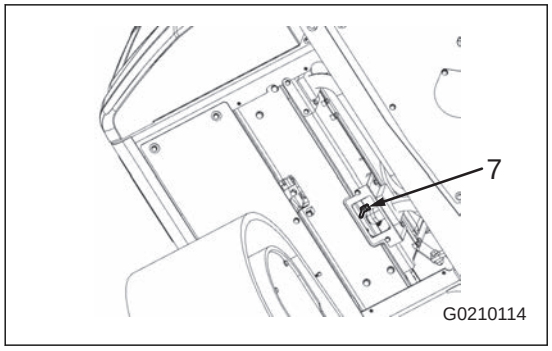

10. Set the swing lock switch to the ON position, and make sure that the swing lock indicator is on.

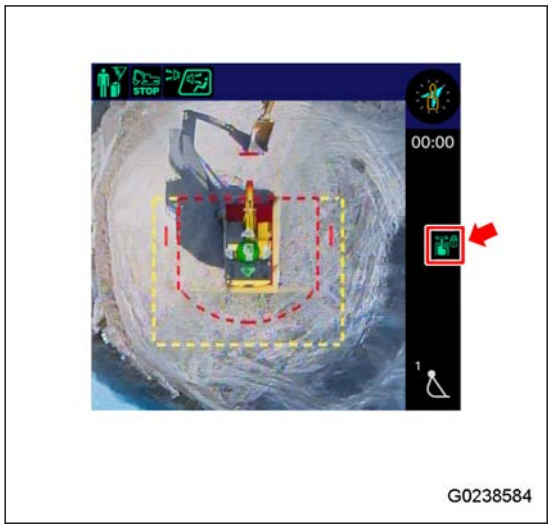

11. To complete the warm-up operation of the hydraulic component more quickly, set the working mode to the P mode (heavy-duty mode).

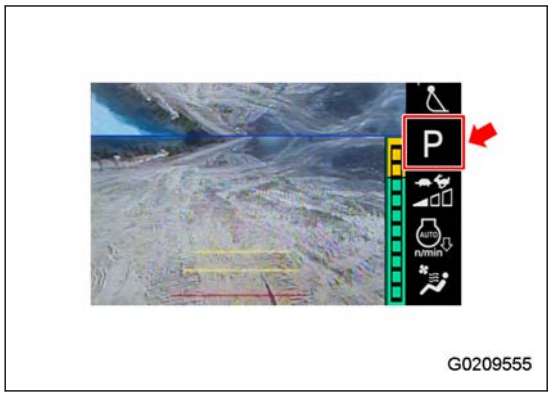

12. Operate the operating part (g) of the lock lever slowly and securely to set it to the FREE position (F), and raise the bucket from the ground.

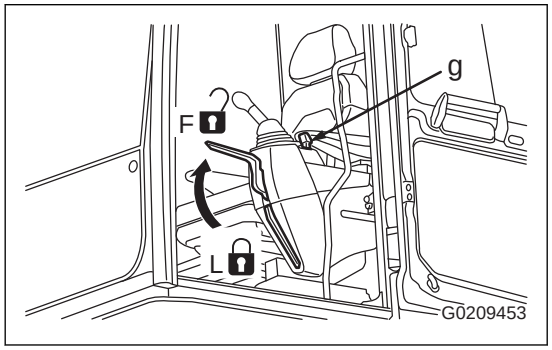

13. Turn the fuel control dial to a point of 2/3 between the Low idle (MIN) position and High idle (MAX) position.

NOTICE

When you operate the work equipment, be careful not to interfere with the machine or ground.

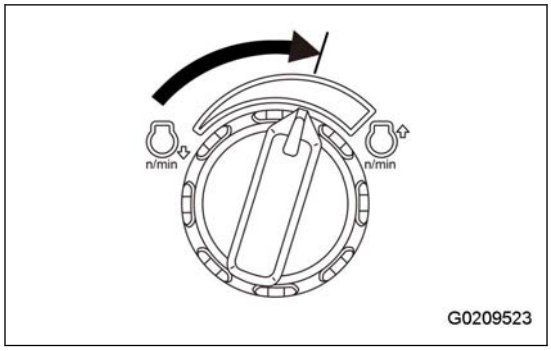

14. Operate the work equipment control levers as follows.
    1) Move the R.H. work equipment control lever slowly in the direction of the bucket CURL position (D) to the stroke end, and hold it at the position for 30 seconds.
    2) Move the R.H. work equipment control lever slowly in the direction of the bucket DUMP position (C) to the stroke end, and hold it at the position for 30 seconds.
    3) Move the L.H. work equipment control lever slowly in the direction to the arm IN position (B) to the stroke end, and hold it at the position for 30 seconds.
    4) Move the L.H. work equipment control lever slowly in the direction to the arm OUT position (A) to the stroke end, and hold it at the position for 30 seconds.

    When the operations of Steps 1) to 4) are done continuously, the pointer of the engine coolant temperature gauge increases. The pointer of the engine coolant temperature gauge moves down temporarily around the center of scale (E). After that, continue the operation for approximately 10 minutes.

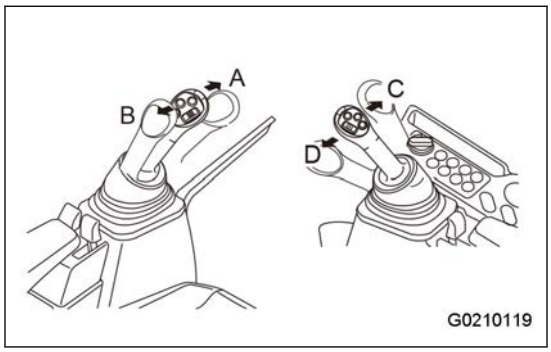

15. Stop the engine.

16. Open the drain valve (7) to drain coolant.
17. Close the drain valve (7).
18. Install the undercover (6).

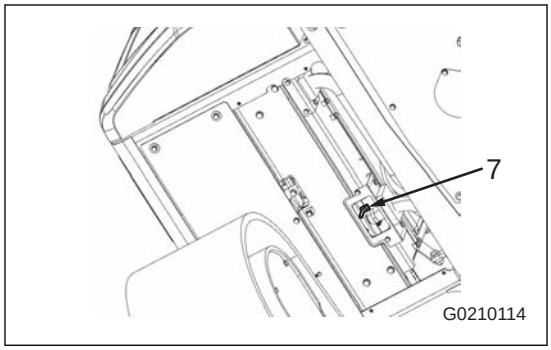

19. Add the Non-Amine Engine Coolant through the filler port to the FULL of the fluid level gauge of expansion tank.

    For the coolant density, see “Coolant Density Table”.

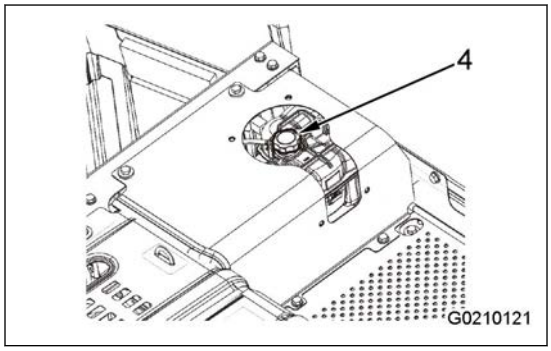

20. Run the engine at low idle for 5 minutes to bleed the air mixed in coolant, and then increase the coolant temperature to the position (A) of the gauge.

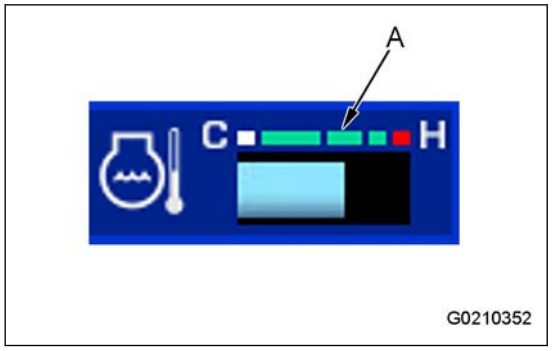

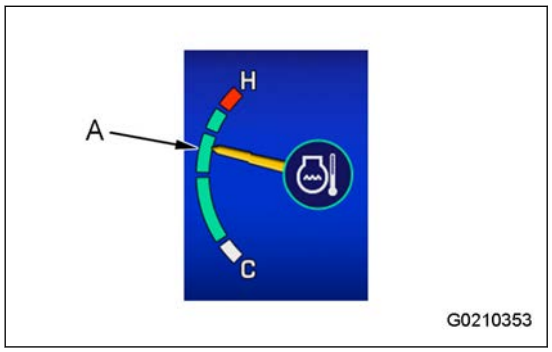

21. Stop the engine, wait approximately 3 minutes, add the Non-Amine Engine Coolant to the FULL line of the fluid level gauge of the expansion tank, and then tighten the expansion tank cap (4).

NOTICE

Examine the O-ring (8) when you tighten the cap. If foreign material is attached to the O-ring, remove it. If the O-ring has damage, the coolant leakage can occur. Replace the cap.

22. Install the cover (2).

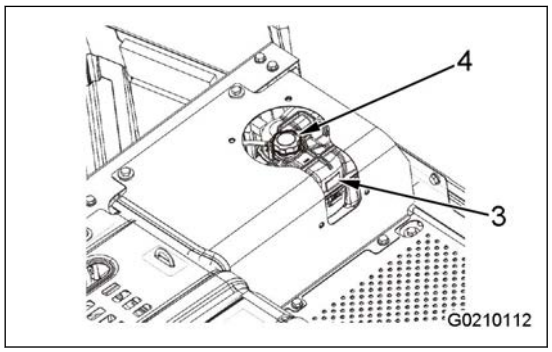

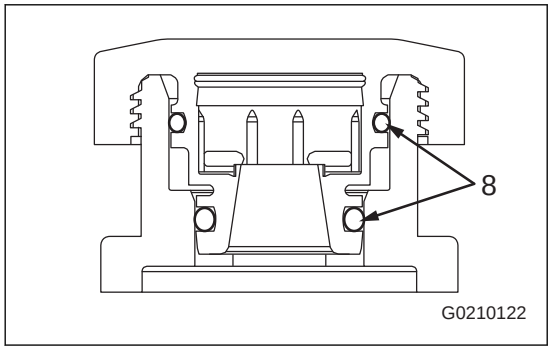

How to Examine Looseness and Tighten Track Shoes Bolts

NOTICE

If the machine is used with track shoe bolts loose, they will break. If any looseness of the shoe bolt is found, retighten it.

1. Check for looseness of the shoe bolt (1).

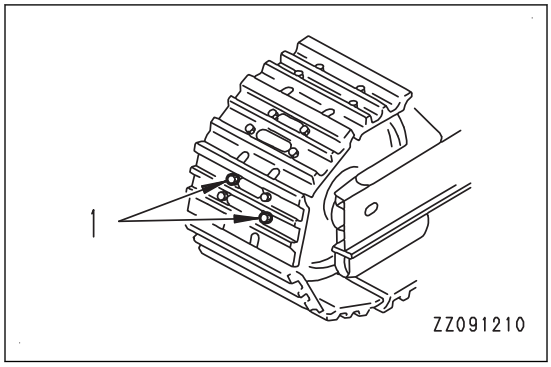

2. If any looseness of the bolt is found, tighten it in order shown in the figure.

   Tightening torque: 490 ± 49 Nm {50 ± 5 kgfm, 362 ± 36 lbft}
3. Check that the nut and shoe are in close contact with the link contact surface.
4. After checking, tighten a further 120 ± 10 °.

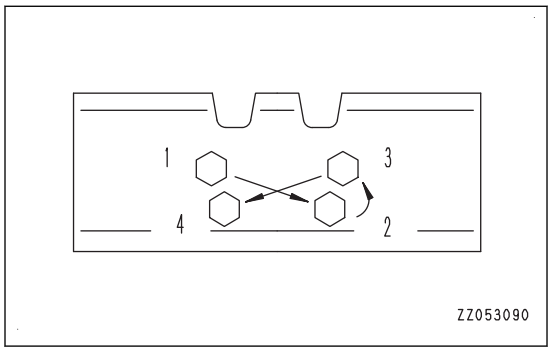

How to Examine and Adjust Track Tension

1. Run the engine at low idle, then move the machine forward for a distance equal to the track length on ground, and slowly stop the machine.
2. Place straight wooden square bar (3) which reaches from idler (1) to carrier roller (2) on the track.
3. Measure the maximum deflection (a) between the bottom surface of the wooden bar and top surface of the track shoes.
   - Standard deflection:
     Deflection “a” should be 10 to 30 mm {0.4 to 1.2 in} .

   If the deflection is out of the standard value range, adjust it into the standard value range.

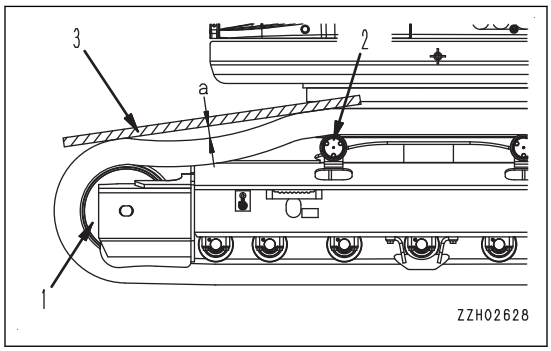

How to Increase Track Tension

Items to be prepared

Grease pump

1. Pump in grease through grease fitting (2) by using a grease pump.
   Grease fitting (2) forms one part with plug (1).
2. To check if the tension is correct, run the engine at low idle, move the machine slowly forward (by an amount equal to the length of track on ground), then stop the machine.
3. Check the track tension again, and if the tension is not correct, adjust it again.

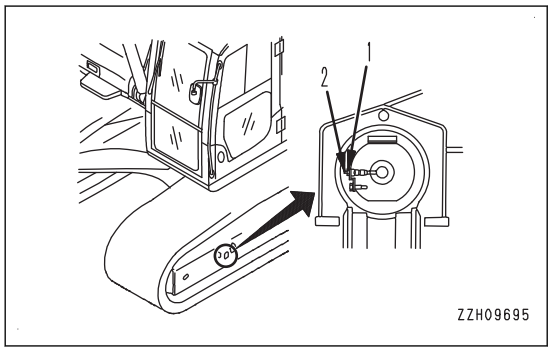

4. Grease can be pumped in until dimension (S) becomes 0 mm {0 in} . If the track tension is still loose, the pins and bushings are excessively worn. The pins and bushings must be inverted or replaced. Ask your Komatsu distributor for repair.

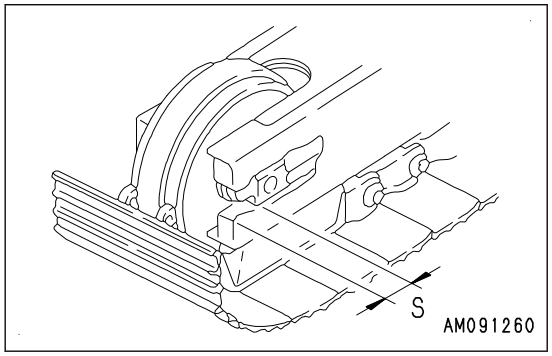

How to Decrease Track Tension

⚠ WARNING

Never loosen plug (1) more than 1 turn.
If it is loosened more than 1 turn, there is a danger of plug (1) flying out under the high internal pressure of the grease.
Never loosen any part other than plug (1). Never put your face in the mounting direction of plug (1).

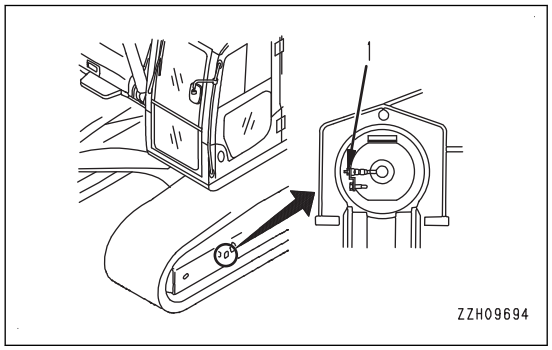

1. Loosen plug (1) gradually to release the grease.
2. If the grease does not come out smoothly, move the machine forward and backward a short distance.
3. Tighten plug (1).
4. To check if the tension is correct, run the engine at low idle, move the machine slowly forward (by an amount equal to the length of track on the ground), then stop the machine.
5. Check the track tension again, and if the tension is not correct, adjust it again.
   If the track tension cannot be decreased by the above procedure, ask your Komatsu distributor for repair.

Replace Bucket Teeth (Vertical Pin Type)

Replace the bucket teeth before the adapter starts to wear.

⚠ WARNING

- **It is dangerous if the work equipment moves by mistake during the replacement of the tooth. Set the work equipment in a stable condition, set the lock lever securely to the LOCK position, and stop the engine.**
- **The pin is hit by the strong force, and there is a danger that the pin can fly out. Make sure that there is no person around the machine.**
- **Broken pieces can fly during the replacement work. Put on the protective equipment such as protective eyeglasses and gloves.**

1. To pull out the pin of the tooth (1), put the block (5) at the bottom of the bucket to set the bottom of the bucket horizontally.

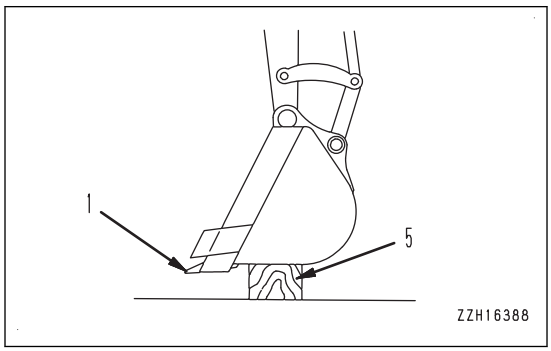

2. Make sure that the work equipment is in a stable condition, hold the operating part (g) of the lock lever, and set it to the LOCK position (L).

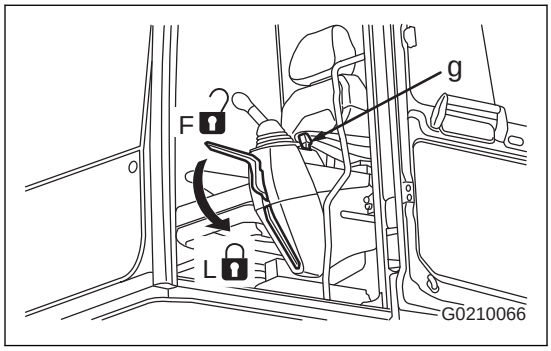

3. Push out the lock pin (2) with a hammer and tapping tool.

   If you hit a tapping tool against the rubber pin lock (3), the rubber pin lock can have damage. Set it behind the pin.
4. Examine the removed lock pin (2) and rubber pin lock (3).
5. Do not use the lock pin (2) and rubber pin lock (3) in the conditions that follow. If you use them, the tooth (1) will come off during the operation. Examine the shape of the parts. If damage is found, replace the parts with new ones.

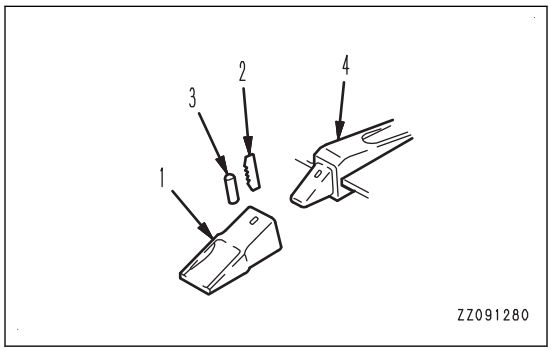

   - The lock pin (2) is too short.

     The dimension (B) is 1/3 or more of the dimension (A) when the lock pin (2) is aligned with the bottom surface (C).

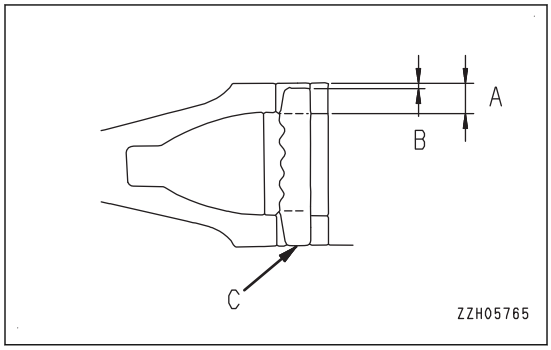

- The steel ball is about to come off.

  The rubber (6) of the rubber pin lock is broken.

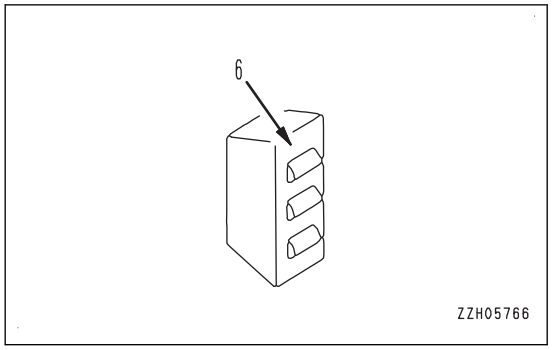

- The steel ball sinks.

  The rubber of the rubber pin lock is deteriorated and steel ball (7) sinks into it when you push the ball by hand.

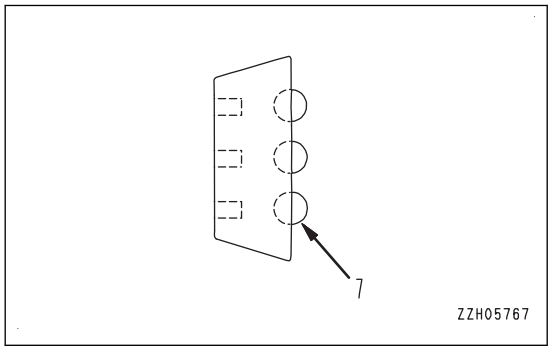

6. Remove the soil attached to the adapter (4) with a putty knife.

7. Use your hand or a hammer to push the rubber pin lock (3) into the hole of the adapter (4).

   At this time, be careful not to let the rubber pin lock (3) fly out from the adapter surface.

8. Clean the inner side of the tooth (1), and then install it to the adapter (4).

   If mud attached to it or if there are protrusions, the tooth (1) will not be fully inserted to the adapter (4), and the engaged part does not connect securely.

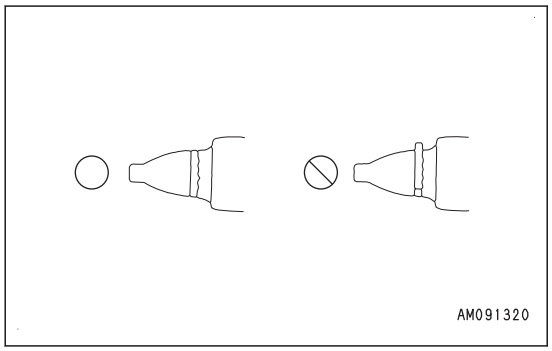

9. Insert the tooth (1) into the adapter (4), and make sure that the rear surface of the pin hole of tooth (1) is at the same level as the rear surface of the pin hole of adapter (4) when you push the tooth (1) hard.

   If the rear surface of the pin hole on the tooth (1) protrudes in front of the rear surface of the pin hole on the adapter (4), do not hit the pin.

   There are attached materials (C) that prevent a full connection of the tooth (1) and adapter (4).

   Find and remove the attached materials, and fully insert the tooth (1) into the adapter (4), and then hit the lock pin (2).

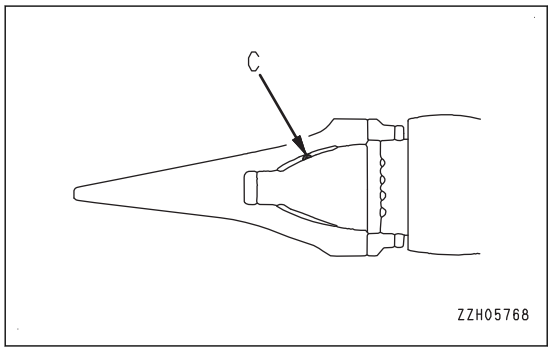

10. Insert the lock pin (2) into the pin hole of the tooth (1), and hit it until the top end of the lock pin (2) becomes the same height as the surface of the tooth (1).

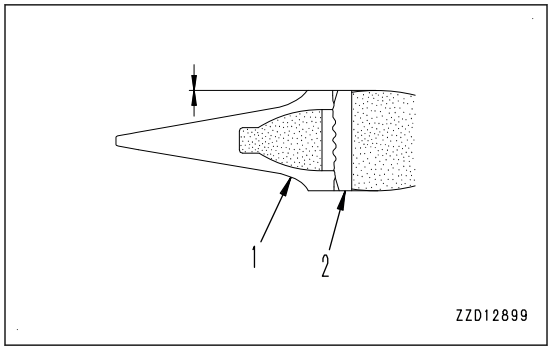

11. After you replace the bucket teeth, be sure to examine the items that follow.
    - When the lock pin (2) is hit fully, its top surface is fixed at the same level with the surface of the tooth (1).
    - Lightly hit the lock pin (2) in the reverse direction from which it was hit.
    - Lightly hit the front end of the tooth (1) up and down, and lightly hit the side surface from right and left.
    - The rubber pin lock (3) and lock pin (2) must be set as shown in the right figure.

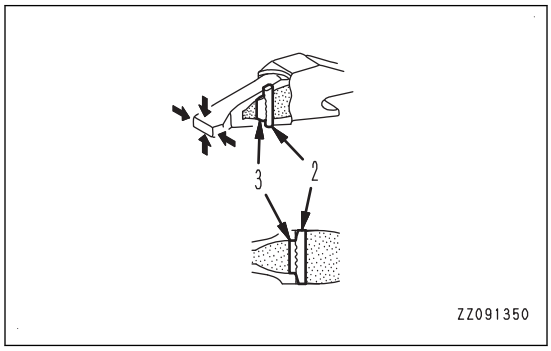

REMARK

When you turn over the tooth, the wear will become equal. This will extend the service life of the tooth and reduce the frequency of replacement.
When you replace the tooth, replace the rubber pin lock and lock pin with new ones at the same time. This prevents the fall off of the tooth.

Replace Bucket Teeth (Horizontal Pin Type)

Replace the bucket teeth before the adapter starts to wear.

⚠ WARNING

- **It is dangerous if the work equipment moves by mistake during the replacement of the tooth. Set the work equipment in a stable condition, set the lock lever securely to the LOCK position, and stop the engine.**
- **The pin is hit by the strong force, and there is a danger that the pin can fly out. Make sure that there is no person around the machine.**
- **Broken pieces can fly during the replacement work. Put on the protective equipment such as protective eyeglasses and gloves.**

1. To pull out the pin (1) of the tooth (2), put the block (5) at the bottom of the bucket to set the bottom of the bucket horizontally.

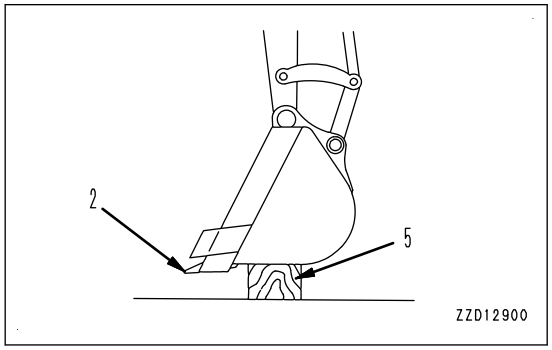

2. Make sure that the work equipment is in a stable condition, hold the operating part (g) of the lock lever, and set it to the LOCK position (L).

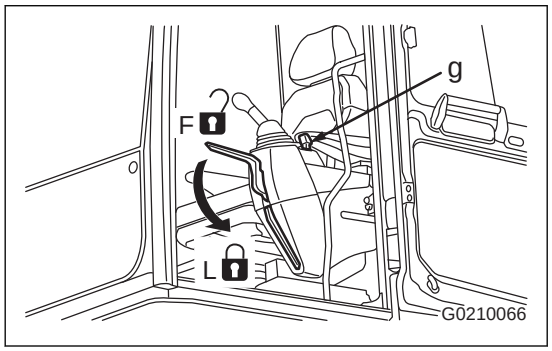

3. Put a bar on the pin (1), hit the bar with a hammer to push out the pin, and then remove the tooth (2).

   REMARK

   If it cannot be removed by this method, consult your Komatsu distributor for replacement work.

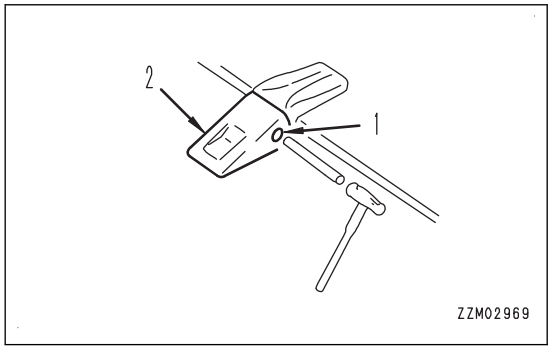

4. Clean the mounting surface, put the new tooth (2) to the adapter, insert the pin (1) in a half way, and hit the bucket with a hammer to install it.

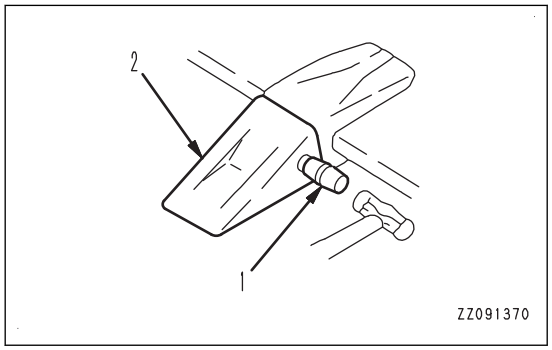

Adjust Bucket Clearance

⚠ WARNING

It is dangerous if the work equipment moves by mistake while you adjust the clearance.
Lower the work equipment to the ground in a stable condition, securely set the lock lever to the LOCK position, and stop the engine.

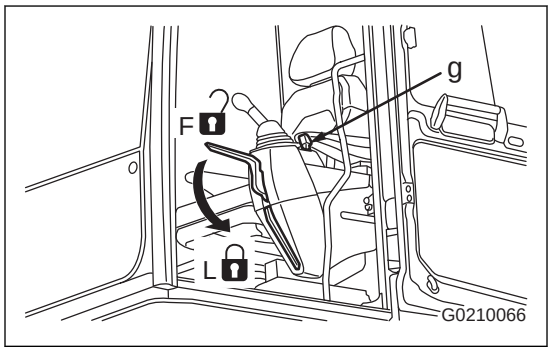

1. Set the work equipment in the posture shown in the figure, securely operate the operating part (g) of the lock lever to set it to the LOCK position (L), and stop the engine.
2. Move the O-ring (1) at the connecting part, and measure the play (a).

   If you move the bucket to one side, you can easily measure the play at 1 place (the right side in the figure).

   Use a feeler gauge for easy and accurate measurement.
3. Loosen the plate mounting bolts (2) (4 pieces), and then loosen the plate (3).

   The shim is a split type. It is not necessary to remove the bolts when you do the work.
4. Pull out the shims (4) for the same quantity of the play (a).

   The applicable play (a) is 0.5 to 1.0 mm {0.02 to 0.039 in}.

   There are 2 types of shims (4): 1.0 mm {0.039 in} and 0.5 mm {0.02 in}.

   When the play (a) is smaller than 1 shim, do not adjust it.
5. Tighten the bolts (2) (4 pieces).

   If the bolt (2) is too hard to tighten, pull out the stopper bolt (5) of the pin. The bolt can be easily tightened.

   (6) Arm

   (7) Bucket

[Example] When play is 3 mm {0.118 in}, the 2 shims of 1.0 mm {0.039 in} and 1 shim of 0.5 mm {0.02 in} must be removed, and the play becomes 0.5 mm {0.02 in}.

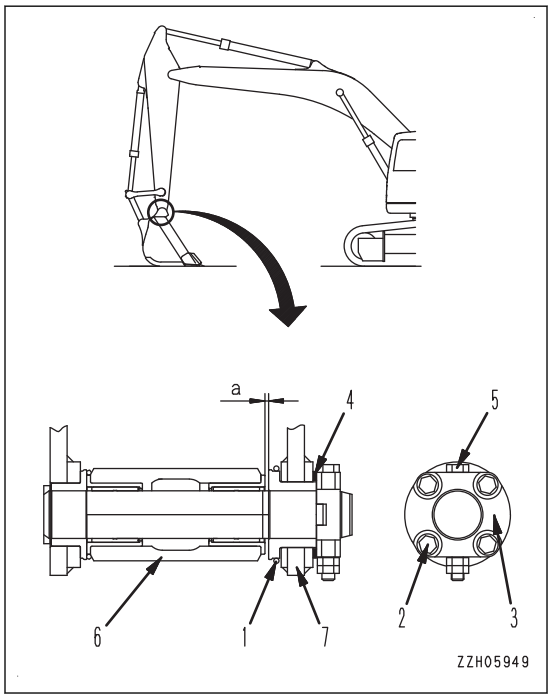

How to Examine Window Washer Fluid Level, Add Fluid

If air is mixed in window washer fluid, examine the fluid level in the window washer tank (1).

1. Examine the fluid level in the window washer tank (1).
2. If the level is not sufficient, add window washer fluid for automobile.

   Be careful to prevent entry of foreign material when you add the window washer fluid.

   REMARK

   The window washer tank capacity is 2.2 ℓ {0.58 US gal}. It is recommended to add it with a 2 ℓ {0.53 US gal} container.

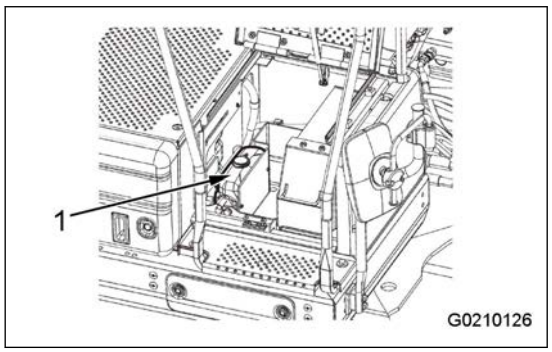

Mixing Proportion of Pure Washer Fluid and Water

The mixing proportion is different by the ambient temperature. Add the window washer fluid mixed with water in the proportion that follows.

Area, season	Mixing proportion	Freezing temperature
Normal	Unmixed solution 1/3 : water 2/3	-10 ℃ {14 ℉}
Winter in cold district	Unmixed solution 1/2 : water 1/2	-20 ℃ {-4 ℉}
Winter in very cold district	Unmixed solution	-30 ℃ {-22 ℉}

There are 2 types of commercially available window washer fluid for automobile (undiluted solution) by the freezing temperature, one is -10 ℃ {14 ℉} (for general use) and the other is -30 ℃ {-22 ℉} (for cold district). Select by area or season.

REMARK

There is an air bleeding hole on the cap of the window washer tank to prevent breakage caused by negative pressure in the tank when window washer is operated. The window washer fluid leakage from the hole for air bleeding can occur by its volume or the vibration of the machine, but it is not a failure.

How to Examine Wiper Blade

(1) Front window wiper blade

(2) Lower window wiper blade

(3) Wiper arm

Check each wiper visually, and replace the wiper blade in the following cases.

- When wiping is uneven
- When the wiper blade has cracks or damages
- When the wiped glasses has rubber abrasion of the wiper blade

NOTICE

Be careful not to release the arm by mistake while the blade is being removed from the arm. Otherwise it may hit the glass and the glass may be broken.

If rubber peeled from the wiper blade is attached to the glass, remove the wiper blade rubber attached to the glass with a cloth to which neutral detergent liquid is applied.

Do not use any solvent to remove it, because it has a bad influence upon the wiper blade rubber.

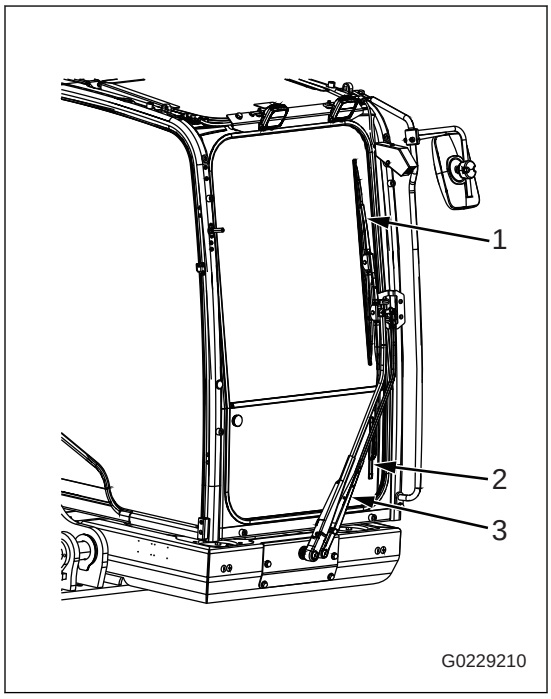

How to Replace Front Window Wiper Blade

NOTICE

- **Make sure that the leaf spring (1) is installed in the correct direction.**
- **Do not deform the leaf spring (1).**

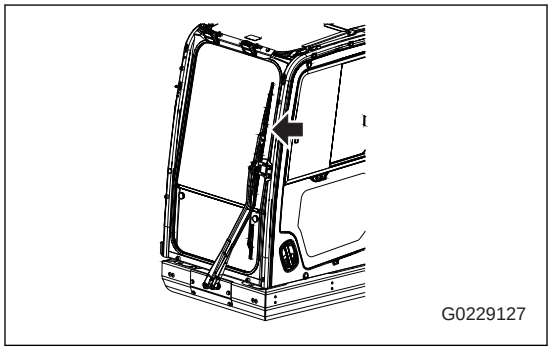

1. Loosen the screw (2), and remove the blade (3).
2. Install a new blade, and tighten the screw (2).

   Tightening torque: 8 to 10 Nm {0.82 to 1.02 kgfm, 5.93 to 7.38 lbft}

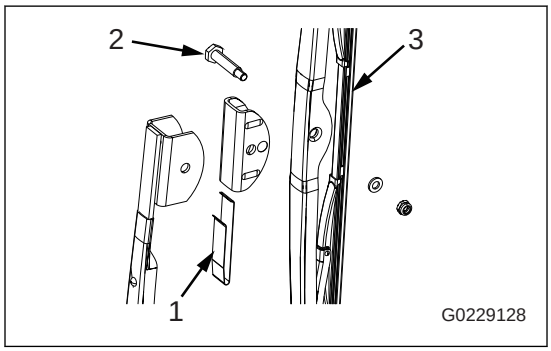

How to Replace Lower Window Wiper Blade

1. Open the cover (A).
2. Pull out the blade (C) from the U-shaped hook (B).
3. Remove the blade (C) from the clearance of the cover (A), and replace it with a new blade.
4. Close the cover (A).

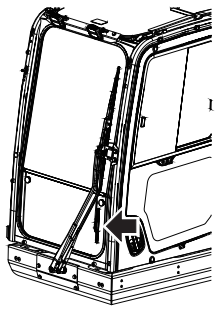

G0229129

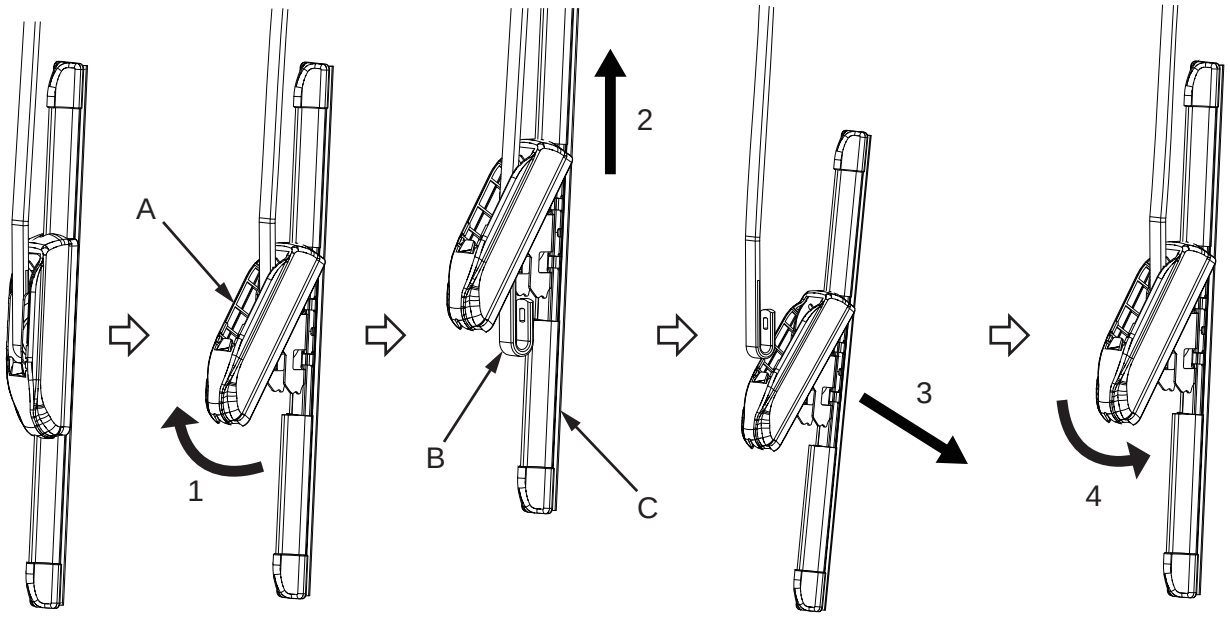

G0229130

How to Examine and Do Maintenance Air Conditioner

Inspection and Maintenance Items

Some maintenance items of the air conditioner are to be inspected periodically and the others are to be inspected when required. Do the inspection and maintenance as follows to use the air conditioner effectively.

Check, maintenance item	Content of check, maintenance	Guideline for maintenance interval
Refrigerant (gas)	Charge amount	Twice a year (spring, autumn)
Air conditioner condenser	Clogged fins	Every 500 hours “How to Examine and Clean Radiator Fins, Oil Cooler Fins, Aftercooler Fins and Air Conditioner Condenser Fins”
Compressor	Operating condition	Every 4000 hours
V-belt	Damage, tension	Every 500 hours “How to Examine and Adjust Air Conditioner Compressor Belt Tension”
Blower motor, fan	Operating condition (Check for unusual noise)	When required
Control mechanism	Operating condition (Check that function is normal)	When required
Piping mounts	Mounting condition, looseness at tightening or connecting portions, leakage of gas, damage	When required

Even during the off-season, operate the air conditioner for 3 to 5 minutes once a month to maintain the oil film at all parts of the compressor.

Examine Refrigerant Level of Air Conditioner (Gas)

⚠ WARNING

- **Do not loosen the parts of the refrigerant circuit. Refrigerant leakage can be caused.**
- **Do not touch the refrigerant of the air conditioner. There is a danger of loss of sight if the refrigerant gets into your eye, or frostbite if it gets on your hand.**
- **Do not let an open flame be near the point where the refrigerant gas leaks.**

If the refrigerant level is not sufficient, the performance of the air conditioner decreases.

1. Run the engine at high idle.
2. Set the temperature to 18.0 ℃ {64.4 ℉} (maximum cooling) and operate the air conditioner.
3. Examine the condition of the refrigerant gas (Hydrofluorocarbons HFC-R134a) in the refrigerant circuit, through the sight glass (1) (inspection window) at the refrigerant hose fitting.

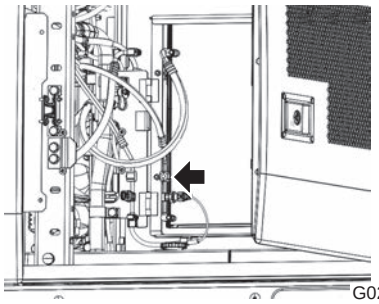

(A) No bubbles are found in refrigerant flow: Sufficient

(B) Bubbles are found in refrigerant flow: Not sufficient (bubbles move continuously)

(C) Colorless, transparent: No refrigerant

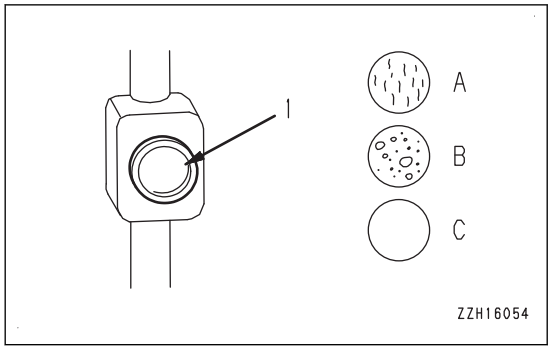

REMARK

When there are bubbles, the refrigerant gas level is low. In this case, consult your Komatsu distributor to add refrigerant. If the air conditioner is operated with the refrigerant gas level low, it can cause damage to the compressor.

Wash Washable Floor

On the washable cab floor, you can flush out the dirt directly with water.

WARNING

If you touch the control levers by mistake, there is a possibility that the machine suddenly moves and it can cause dangerous accident. Before you go away from the operator seat, be sure to hold the operating part (g) of the lock lever to set it to the LOCK position (L) securely.

Select a hard and level area for work.
Put strong blocks below the undercarriage to tilt the machine, and be very careful when you do the operation.

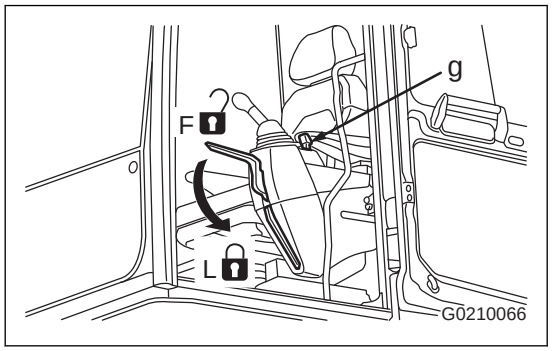

How to Clean Washable Floor Mat

1. Stop the machine on a level ground, lower the bucket to the ground, stop the engine, and then do the cleaning work.
2. Clean the floor mat with a brush to remove dirt. If you clean it with water, remove the floor mat first.

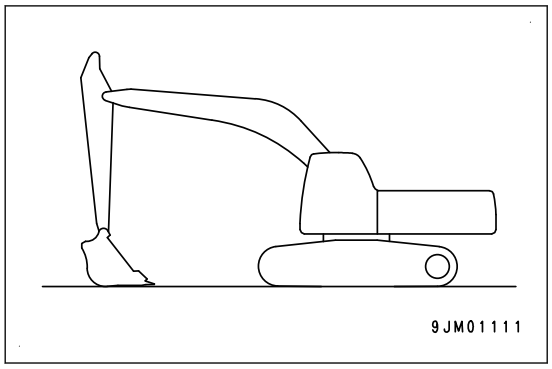

Clean CAB Floor

NOTICE

Do not let water on the monitors and connectors in the operator cab during the operation.
Do not spray water to the area above the stand of the operator seat (4).
If water splashes on peripheral devices, be sure to wipe it off.

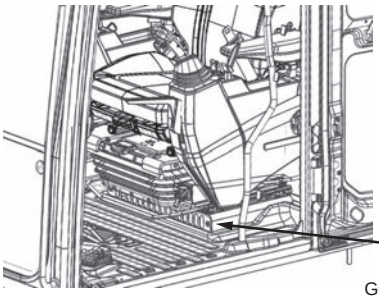

1. Tilt the machine.

   Select the safest method in response to the state of the machine. For details, see “How to Tilt Machine (4-45)”.

   Method to use blocks to tilt the machine for the work is explained here.

2. Slowly operate the swing operation to let the position of the drain outlet (3) on the cab floor be lower.

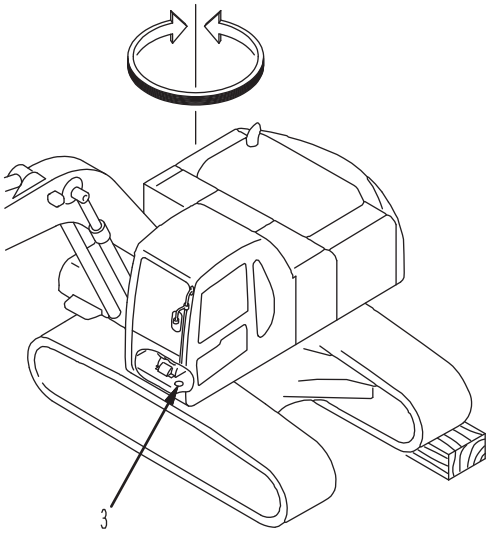

3. Lower the work equipment to the ground, and keep it in a stable condition.

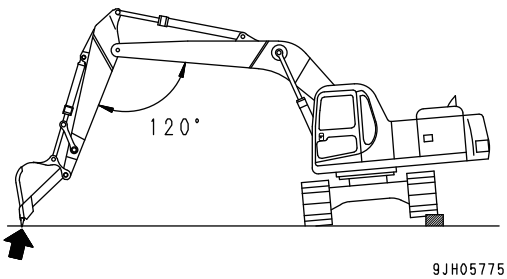

4. Operate the operating part (g) of the lock lever (1) to set it to the LOCK position (L), and stop the engine.

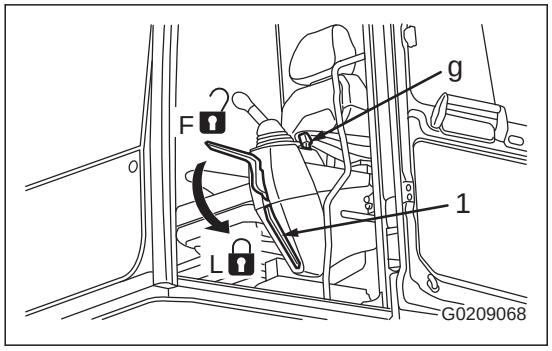

5. Pull out the protrusions (2) (6 places) behind the floor mat, and remove the floor mat.
6. Remove the cap of the water drain port (3).
7. Clean dirt on the floor through the water drain port (3) directly with water.
8. After you complete the cleaning, install the cap to the water drain port (3).

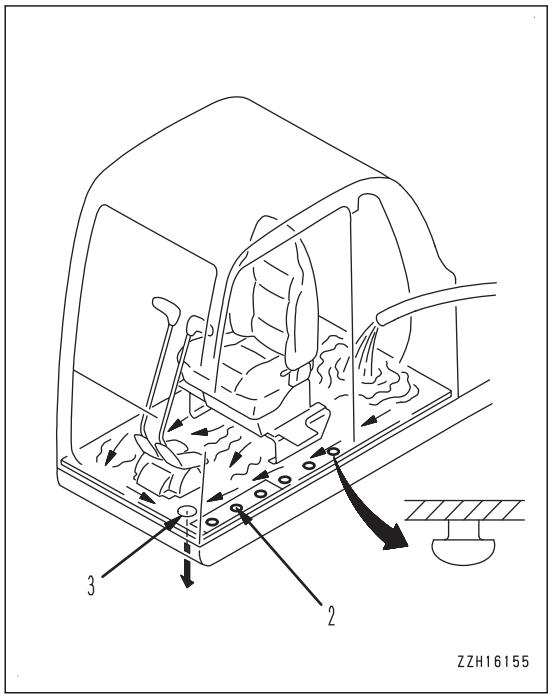

9. Put the floor mat, insert the protrusion (2) behind the floor mat, and fix it.

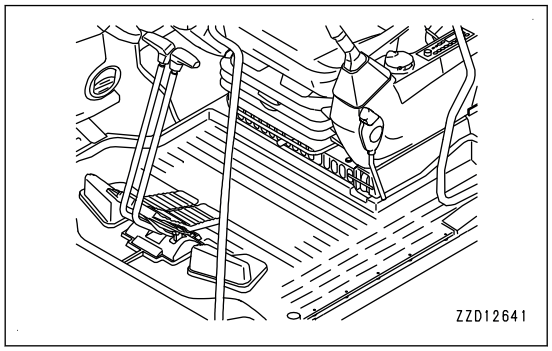

How to Tilt Machine

You can set the machine at an angle by using a slope or blocks. Consider the condition of the machine and select the safe method.

How to Use a Slope

⚠ WARNING

Select a solid and smooth slope.
Always block the tracks from movement, and thrust the work equipment into the ground.

1. Stop the machine with the work equipment on the downhill side on a slope.
2. Block the tracks from movement and thrust the work equipment into the ground.

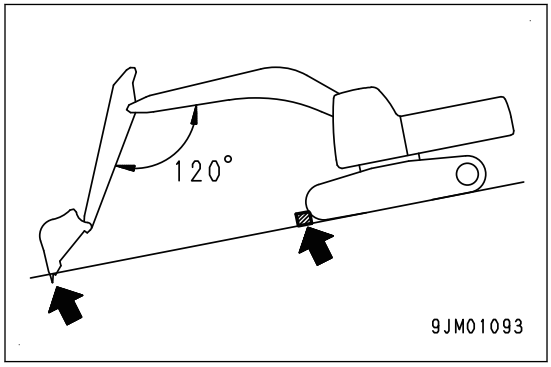

When You Use Blocks

⚠ WARNING

Select a firm flat place.
Put strong blocks under the undercarriage to stabilize the machine and be extremely careful when performing the operation.

1. Raise the machine off the ground by using the boom and arm.
   When doing this, operate the levers slowly.
2. Place block (5) under the raised track and make sure that the machine is stable.

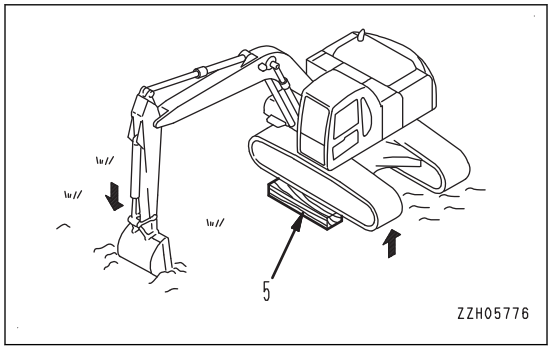

3. Operate the boom slowly and lower the machine.
   When doing this, check that the machine is always stable.

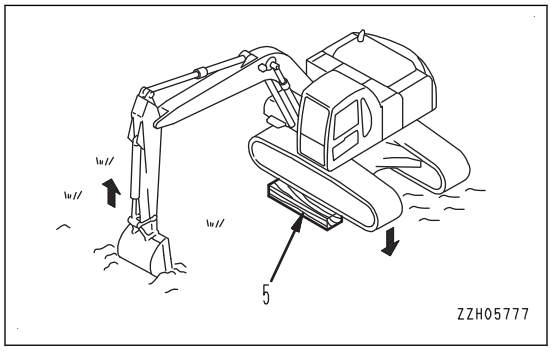

How to Examine Gas Spring

WARNING

The gas spring is filled with the high-pressure nitrogen gas. If it is not handled correctly, an explosion can occur and it can cause personal injury or death. When you handle it, obey the items that follow.

- **Do not disassemble it.**
- **Do not let an open flame be near them. Do not throw them in fire.**
- **Do not do the drilling, welding or flame-cutting.**
- **Do not hit it or roll it or give shocks to it.**
- **When you dispose of it, the gas must be released. Consult your Komatsu distributor.**

The position of the gas spring is as follows.

(1) Tool case cover (1 place).

(2) Ceiling window of cab (1 place each on right and left)

If the tool case cover (1) and the ceiling window (2) of cab are in any of the conditions as follows, consult your Komatsu distributor for inspection, repair, or replacement.

- Cannot be opened with light operation force
- Cannot stay open
- When oil leakage or gas leakage occurs from the gas spring

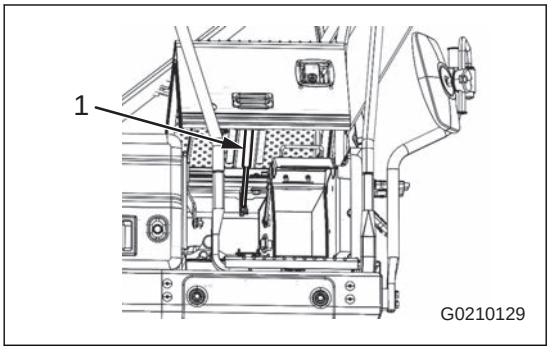

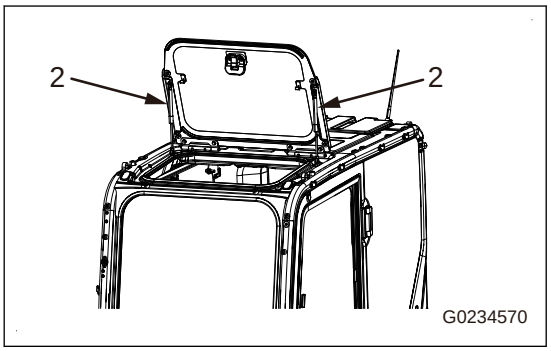

How to Bleed Air from Hydraulic System

To start the engine, see “How to Start Engine (4-47)”. If necessary, see Operation, “How to Start Engine (3-233)”, “How to Start Machine (Travel FORWARD and REVERSE) and Stop Machine (3-255)”, and “Steer Machine (3-259)”.

How to Bleed Air from Pump

Bleed air when you drain oil in the pump.

NOTICE

If the drain hose is installed first, oil flows out through the hole of the air bleeder (1).
If you operate the pump without hydraulic oil filled in the pump case, abnormal heat will occur and this can cause damage to the pump in a short time.

1. Loosen the air bleeder (1), and make sure that oil oozes out from the air bleeder.
2. If oil does not ooze out, remove the drain hose (2) of the pump case, and fill the pump case with hydraulic oil through the drain port.

   Oil flows out from the removed drain hose. Fix the fitting of the hose at the position higher than the oil surface of the hydraulic tank.
3. After the air bleed is completed, tighten the air bleeder (1), and then install the drain hose.

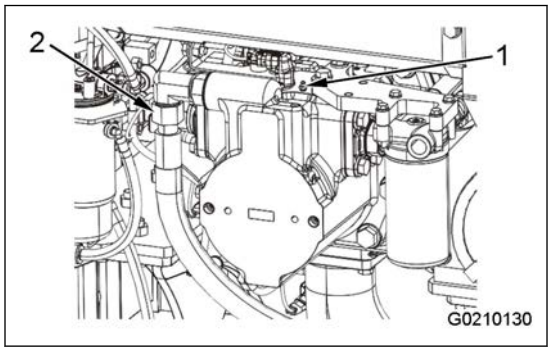

How to Start Engine

To start the engine, see Operation, “How to Start Engine (3-233)”. After it is started, run the engine at low idle for 10 minutes, and then start the next works.

How to Bleed Air from Cylinder

Bleed air when you replace the hydraulic component or replace oil.

NOTICE

If you run the engine at high speed immediately after the start-up or if you push up a cylinder to its stroke end, air in the cylinder causes damage to the piston packing or such in some cases.

1. Start the engine.
2. Set the fuel control dial to the Low idle (MIN) position.
3. Operate each cylinder to approximately 100 mm {3.9 in} before the stroke end 4 to 5 times.

   Be careful not to operate the cylinder to the stroke end.
4. Set the fuel control dial to the High idle (MAX) position.
5. Operate each cylinder to approximately 100 mm {3.9 in} before the stroke end 4 to 5 times.

   Be careful not to operate the cylinder to the stroke end.
6. Set the fuel control dial to the Low idle (MIN) position.
7. Operate each cylinder to the stroke end 4 or 5 times to fully bleed air.

How to Bleed Air from Swing Motor

Do this work only when you drain the oil in the swing motor case.

NOTICE

- **Do not do the swing operation while air is being bled.**
- **If air is not bled from the swing motor, the motor bearings can have damage.**

1. Run the engine at low idle, loosen the hose (3) of the port S, and make sure that oil oozes out from the hose (3) of the port S.
2. If oil does not ooze out, stop the engine, remove the hose (3) of the port S, and fill the motor case with hydraulic oil.
3. After air is bled from the swing motor, tighten the hose (3) of the port S.
4. Run the engine at low idle.
5. Swing equally and slowly 2 turns or more clockwise and counterclockwise.

   Air is bled from the swing motor automatically.

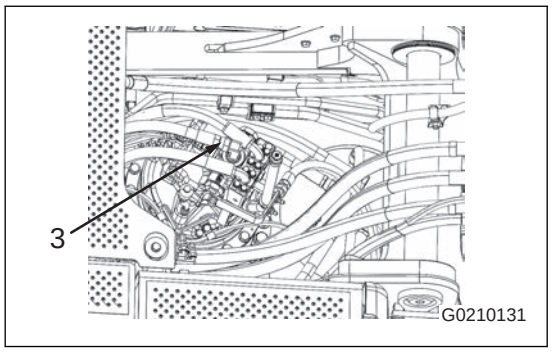

When you replace the swing motor safety valve, consult your Komatsu distributor for replacement and air bleeding.

How to Bleed Air from Travel Motor

Do this procedure only when you drain oil in the travel motor case.

1. Operate the engine at low idle, loosen the air bleeder (4), and tighten it when oil flows out.
2. While the engine runs at low idle, swing the upper structure 90° to set the work equipment to the side of the track.

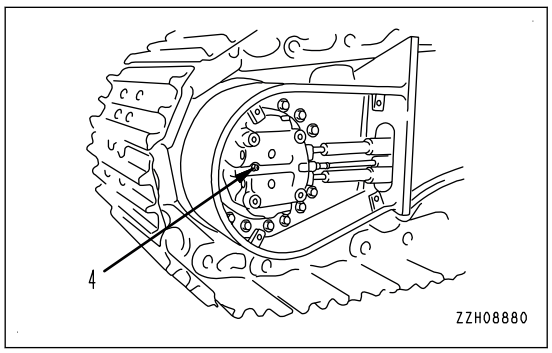

3. Push up the machine slowly until the track is raised in a short distance from the ground. Do the idle rotation of the track for 2 minutes. Continue this procedure for the right and left sides.

   REMARK

   When you do the idle rotation, do it equally forward and in reverse.

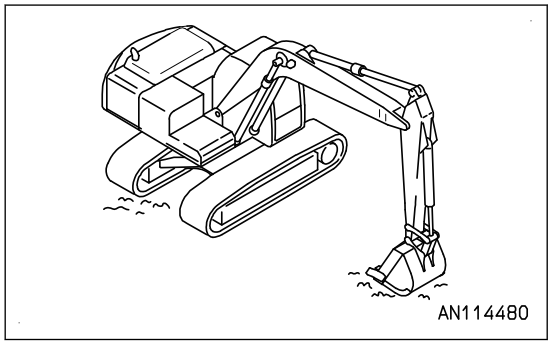

How to Bleed Air from Attachment

(When attachment is installed on the machine)

Bleed air when you replace the hydraulic component or replace oil.

NOTICE

If the attachment has its own air bleeding procedure specified by the manufacturer, obey it.

If a breaker or other attachment is installed, do the air bleed procedure until the air is fully bled from the attachment circuit.

1. Run the engine at low idle.
2. Operate the attachment control switch or pedal continuously (approximately 10 times).
   Air is bled from the attachment circuit.

NOTICE

- **After the air bleed is completed, stop the engine one time, keep the machine as it is for 5 minutes or more, and then start the operation. This operation bleeds air in the hydraulic oil in the tank.**
- **Make sure that there is no oil leakage. Wipe off the oil if found.**
- **After the air bleed is completed, examine the hydraulic oil level. If it is low, add oil.**

How to Examine Camera Visibility

The camera direction can be changed by the shock to the camera. Examine the camera visibility.

Put a triangle cone with a height of approximately 70 cm {2 ft 4 in} (D) at approximately 1m {3 ft 3 in} (A) on the rear side from the rear end of the machine, approximately 1m {3 ft 3 in} (B) on the outer side of the center of the track width line, and at the center (C) of the right front camera and right rear camera from the rear end of the machine.
If you can see the triangle cone on the monitor screen, it is correct.

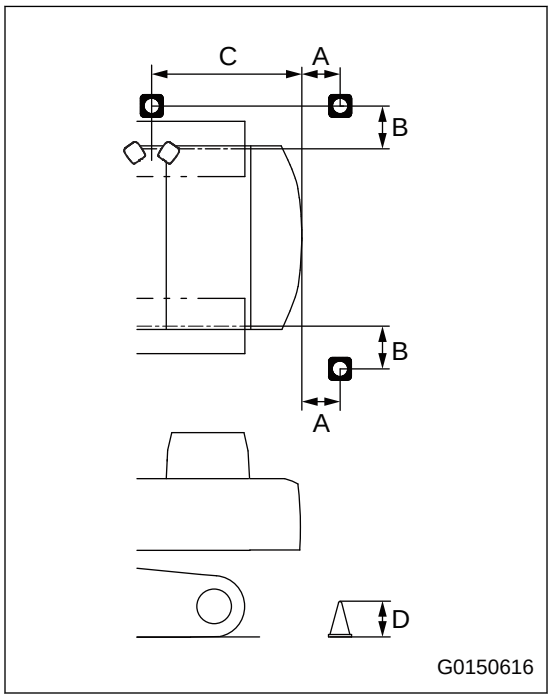

If you cannot see the triangle cone on the monitor screen, consult your Komatsu distributor for adjustment of the camera image.

How to Lubricate Roller at Cab Front Window

If unusual noise comes out from the roller at the bottom right during the operation, lubricate the shaft (1) of the roller.
Be careful not to let grease attach on the outer circumference of the roller (2) and rail (3).

Lubricant recommended by manufacturer: Lithium grease

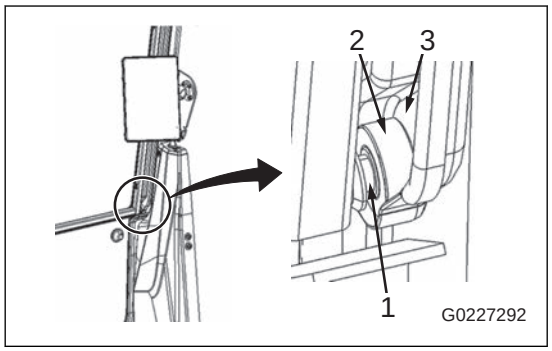

Clean Air Conditioner Fresh/Recirc Filters

The cleaning interval of the recirculation air filter and fresh air filter is every 500 hours as a general guideline.

In an environment with too much dirt, clean the recirculation air filter and fresh air filter as necessary.

For the procedure to clean the recirculation air filter, see “How to Clean Recirculation Air Filter (4-65)”.

For the procedure to clean the fresh air filter, see “How to Clean Fresh Air Filter (4-65)”.

Examine Before You Start Operation

For the items that follow, see Operation, “How to Examine Before You Start Operation (3-203)”.

- How to Drain Water and Sediment from Fuel Tank
- How to Examine Water Separator, Drain Water and Sediment
- How to Examine Oil Level in Hydraulic Tank, Add Oil
- How to Examine Coolant Level, Add Coolant
- How to Examine Oil Level in Engine Oil Pan, Add Oil
- How to Examine Electric Wiring
- How to Examine Fuel Level and Add Fuel
- How to Examine DEF Level and Add DEF
- How to Examine Working Lamp
- How to Examine Horn
- How to Examine Object Avoidance

For the items that follow, see Operation, “Walk-Around Check (3-201)”.

- Examine and Clean Camera
- How to Examine Radar of Object Avoidance
- How to Examine Battery and Indicator of Komatsu Maintenance-Free Battery

Every 100 Hours Maintenance or Weekly Maintenance

Do the maintenance every 100 hours or every week that comes first.

How to Lubricate Work Equipment

NOTICE

If any abnormal noise is generated from any greasing point, perform greasing regardless of the greasing interval.
Perform greasing every 10 hours for the first 50 hours operation on a new machine.
After the machine is subjected to digging work in the water, be sure to grease the wet pins.

Items to be prepared

Grease pump

1. Park the machine on a level and firm ground, lower the work equipment to the ground in the posture shown in the figure, and stop the engine.

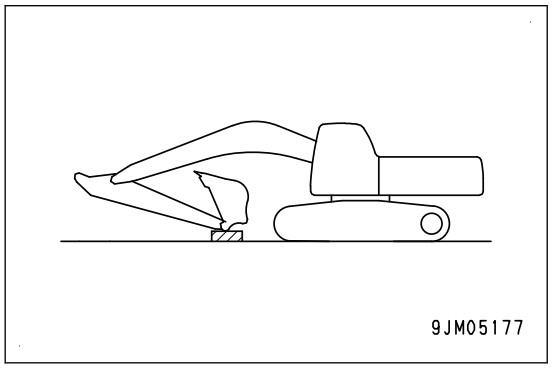

2. By using a grease pump, pump in grease through the grease fittings shown by arrows.
   (1) Arm-Link connection pin (1 place)
   (2) Arm-Bucket connection pin (1 place)

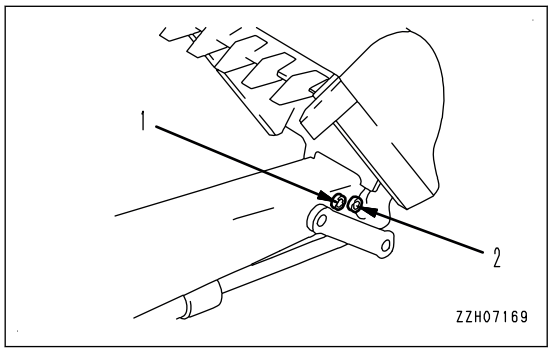

   (3) Link connection pin (2 places)
   (4) Bucket cylinder rod end (1 place)
   (5) Bucket-Link connection pin (1 place)

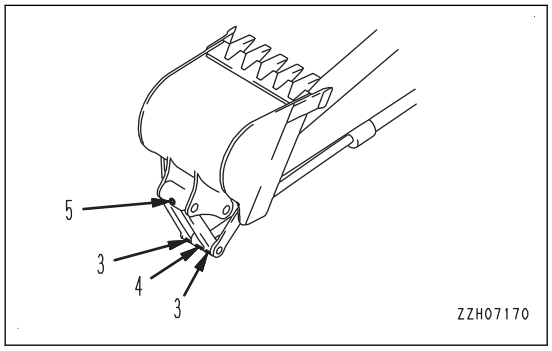

3. After greasing, wipe off any old grease that is pushed out.

Every 250 Hours Maintenance or Monthly Maintenance

Do the maintenance every 250 hours or every month that comes first.

How to Examine Battery Electrolyte Level

Examine it before you start the machine.

Examine the battery electrolyte level in response to the guidelines for a minimum of one time in a month.

⚠ WARNING

Do not use the battery if the battery electrolyte level is below the LOWER LEVEL line. If you do so, it will deteriorate the inner side of the battery and the service life of the battery can be decreased. In addition, it can cause an explosion.
Do not let an open flame be near the battery. Flammable gas occurs from the battery, and it can cause an explosion.
Battery electrolyte is dangerous object. Be careful not to let it touch the eyes or skin. If it gets in your eyes or on your skin, clean the part with a lot of clean water, and consult a doctor immediately.
Do not use a direct air blow or dry cloth to clean the battery. Use a wet cloth to prevent fire or explosion from static electricity.

NOTICE

Do not add the battery electrolyte above the UPPER LEVEL line. Battery electrolyte can leak and cause damage to the paint surface or corrosion to the parts.
When you add the purified water (such as a commercial battery fluid) in cold weather, add it before you start the operation next morning to prevent freezing.

Open the cover (1) at the rear left side of the machine. The battery is installed at the part (A).

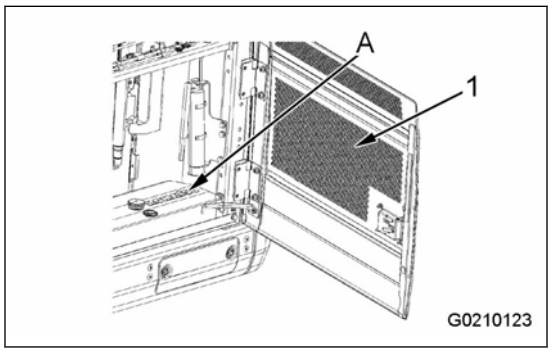

Remove the nuts (2) (2 places) on the top surface of the battery, and remove the covers (3) (2 places).

REMARK

The threaded parts of the nuts (2) are made of resin, and the thread surface goes back to the initial condition even if the nuts are tightened continuously. The tightening force keeps unchanged all the time and does not become light. This is not an abnormal condition.

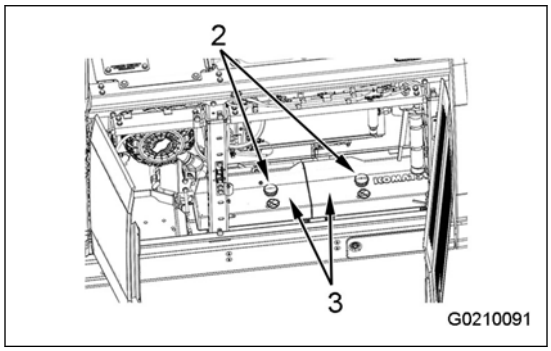

How to Examine Electrolyte Level from Side of Battery

When you examine the electrolyte level from the side of the battery, examine it as follows.

1. Use a cloth wet with water to clean the area around the electrolyte level lines, and make sure that the electrolyte level is between UPPER LEVEL (U.L.) line and LOWER LEVEL (L.L.) line.

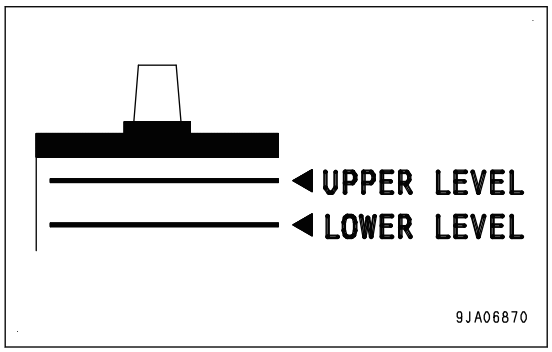

2. If the electrolyte level is less than the center between UPPER LEVEL (U.L.) and LOWER LEVEL (L.L.), remove the cap (4) immediately, and add the purified water (such as a commercial battery fluid) to UPPER LEVEL (U.L.) line.
3. After you add it, tighten the cap (4) securely.

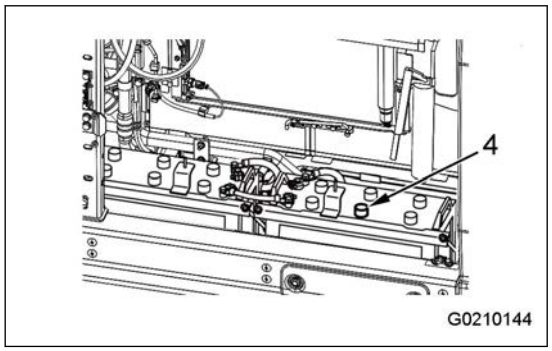

REMARK

If purified water is added above UPPER LEVEL (U.L.) line, remove the fluid with a syringe to lower the level to UPPER LEVEL (U.L.) line. Make the removed fluid neutral with baking soda (sodium bicarbonate), and then clean it with a large quantity of water. If necessary, consult your Komatsu distributor or a battery manufacturer.

How to Examine Electrolyte Level When It is Not Possible to Examine from Side of Battery

When you cannot examine the electrolyte level from the side of the battery, or there is no UPPER LEVEL line on the side of the battery, examine as follows.

1. Remove the cap (4) at the top of the battery, and examine the electrolyte level through the electrolyte filler port (5).

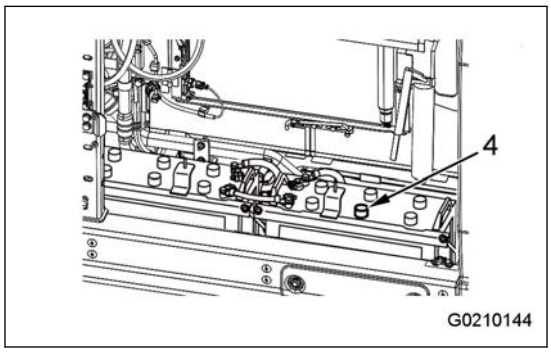

2. If the electrolyte level is less than the sleeve (6), add the purified water (such as a commercial battery fluid) until the bottom of the sleeve (UPPER LEVEL line).

   (A) Correct level: The electrolyte level reaches the bottom of the sleeve. The surface tension causes the surface to bulge and the pole plate does not look straight.

   (B) Low level: The electrolyte level does not reach the bottom of the sleeve. The pole plate looks straight and not bent.

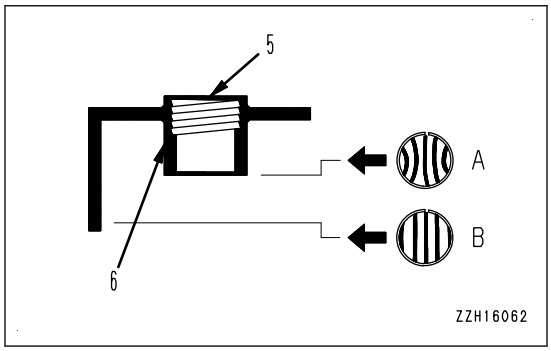

3. After you add it, tighten the cap (4) securely.

   REMARK

   If it is added to a level above the bottom of the sleeve, use a syringe to remove it. Make the removed fluid neutral with baking soda (sodium bicarbonate), and then clean it with a large quantity of water.
   If necessary, consult your Komatsu distributor or a battery manufacturer.

How to Examine Electrolyte Level When It is Possible to Use Indicator to Examine Electrolyte Level

When you use an indicator to examine the electrolyte level, obey the instructions.

For the machine with Komatsu maintenance-free battery, the indicator that shows the battery charge level and battery electrolyte level is installed on the top surface of the battery. For details how to read the indicator, see “How to Examine Battery and Indicator of Komatsu Maintenance-Free Battery (4-69)”.

Every 500 Hours Maintenance

Maintenance for every 100 and 250 hours should be performed at the same time.

How to Lubricate

NOTICE

- **If any unusual noise is generated from any greasing point, perform greasing regardless of the greasing interval.**
- **Perform greasing every 10 hours for the first 50 hours of operation on a new machine.**
- **After the machine is subjected to digging work in the water, be sure to grease the wet pins.**
- **When performing heavy-duty operations, such as hydraulic breaker operations, perform the greasing every 100 hours.**

1. Set the work equipment on the level and firm ground in the maintenance posture as shown in the figure, then lower it to the ground and stop the engine.

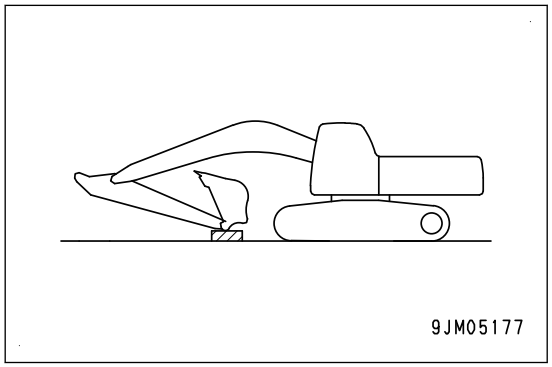

2. By using a grease pump, pump in grease through the grease fittings shown by arrows.
   (1) Boom cylinder foot pin (2 places)

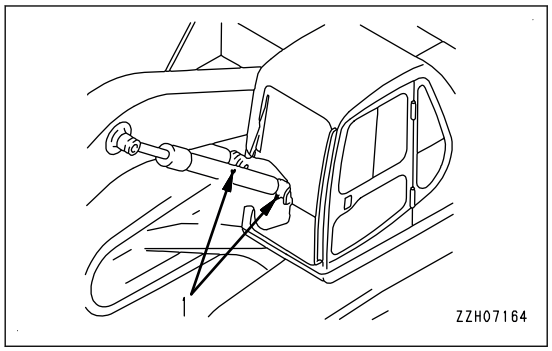

   (2) Boom foot pin (2 places)
   (3) Boom cylinder rod end (2 places)
   (4) Arm cylinder foot pin (1 place)

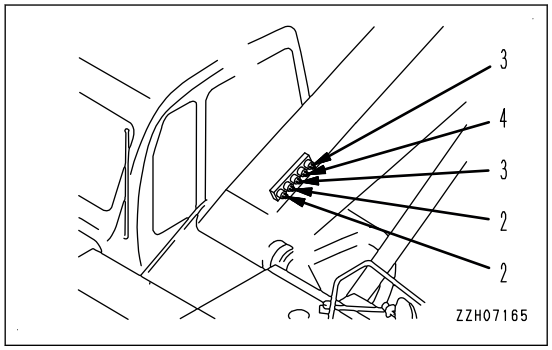

(5) Boom and arm connection pin (1 place)
(6) Arm cylinder rod end (1 place)
(7) Bucket cylinder foot pin (1 place)

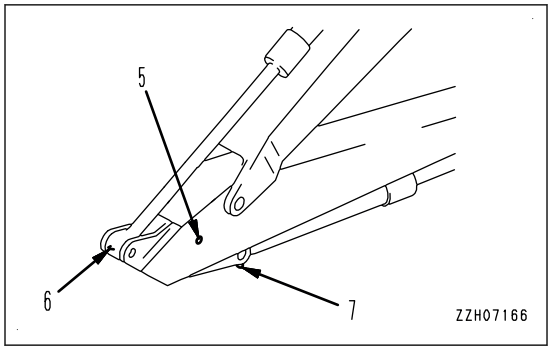

3. After greasing, wipe off any old grease that is pushed out.

How to Replace Fuel Prefilter Cartridge

WARNING

- **After the engine is stopped, all the parts are very hot. Do not replace the filter immediately. Do it after each part becomes cool.**
- **While the engine runs, the high pressure occurs in the engine fuel piping system.**
  When you replace the filter, wait for 30 seconds or more after the engine is stopped to let the internal pressure go down.
- **Do not let an open flame be near.**

NOTICE

- **Komatsu genuine fuel filter cartridges use a special filter that has high filtration efficiency. Be sure to use Komatsu genuine parts for replacement parts.**
- **The common rail fuel injection system of this machine has more accurate parts than those used in the conventional injection pump and nozzle. If a fuel filter cartridge other than Komatsu genuine part is used, dirt or foreign material can be mixed and cause failure to the injection system. Do not use an equivalent product.**
- **Before the replacement operation, keep the area around the fuel prefilter clean to prevent entry of foreign material.**
- **Be very careful to prevent entry of the foreign material when you do the check or maintenance of the fuel system. If dirt or such sticks, wash it off fully with fuel.**

Items to be prepared

- Container to receive fuel
- Filter wrench

1. Open the cover at the right of the machine.
2. Set the valve (1) above the fuel prefilter to the SHUT position (S).

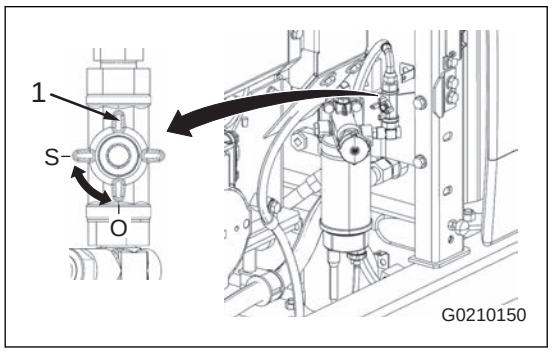

3. Put a container to receive fuel below the fuel prefilter cartridge (2).
4. Loosen the drain valve (3) and drain the water and sediments from the transparent cup (4), and also drain all the fuel from the filter cartridge (2).
5. Remove the clip (7) to remove the drain hose from the transparent cup (4).
6. Remove the connector (5), and put it in a plastic bag to protect from fuel, oil, and water.

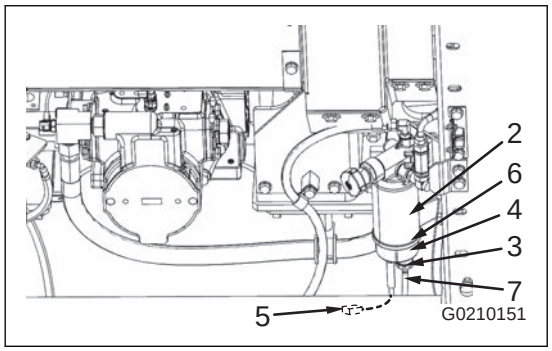

7. Turn the transparent cup (4) counterclockwise with a filter wrench to remove it.

   The transparent cup (4) is used again.

8. Turn the filter cartridge (2) counterclockwise with a filter wrench, and remove it.

9. Install the removed transparent cup (4) to the bottom of the new filter cartridge.

   At this time, be sure to replace the O-ring (6) with a new one.

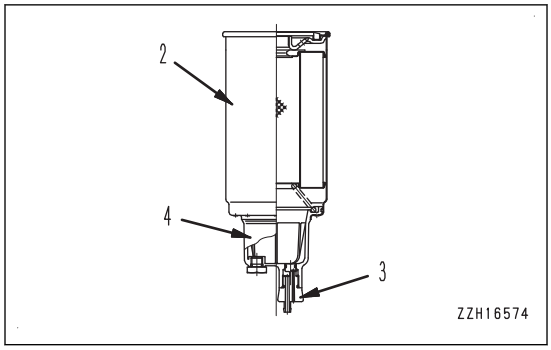

10. When you install the transparent cup (4), apply thin layer of oil to the O-ring (6), tighten the cup until it touches the seal surface of the filter cartridge (2), and then tighten it 1/4 to 1/2 turns.

    NOTICE

    Be sure to obey the tightening angle of the transparent cup (4). If the transparent cup (4) is tightened too much, it can cause damage on the O-ring (6) and it causes fuel leakage. If it is tightened too loose, fuel can leak from the clearance of the O-ring (6).

11. Clean the filter head, fill the new filter cartridge with clean fuel, apply thin layer of oil to the packing surface, and install it to the filter head.

    NOTICE

    - **Make sure that there is no foreign material in the new prefilter before you install it.**
    - **Examine the inner part of the fuel prefilter body. If foreign material is found, remove it with a cloth.**
    - **When you add fuel, do not remove the cap (B) at the center. Be sure to add fuel from small holes (A) on the dirty side (8 places).**
    - **After you fill with fuel, remove the cap (B) in the center, and install the fuel filter.**
    - **Fill it with clean fuel, and prevent entry of foreign material. Especially, the center part is the clean side, so do not remove the cap (B) when you fill with fuel. Be careful not to let dirt or dust get into the center part on the clean side.**

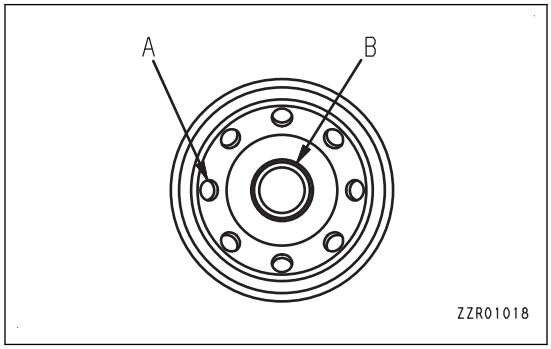

12. When you install the cartridge, tighten it until the packing surface touches the sealing surface of the filter head. Then, tighten it 3/4 of a turn.

    NOTICE

    If you tighten the filter cartridge too much, the packing can have damage and this can cause fuel leakage. If you tighten the filter cartridge too loose, fuel leakage occurs from the packing. Be sure to obey the tightening angle.
    When you tighten it with a filter wrench, be very careful not to make dents or damage to the filter.

13. Make sure that the drain valve (3) is tightened securely.

14. Remove the plastic bag from the connector (5), and connect the connector (5).

REMARK

- If water gets on the connector (5), the sensor causes the malfunction and the water separator caution lamp comes on in some cases. When you remove the connector (5), be very careful not to let water get on the connector.
- If water gets on the connector (5), dry it fully before you connect it.

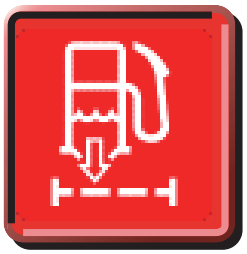

G0201100

15. Set the valve (1) above the fuel prefilter to the OPEN position (O).
16. Install the drain hose.
17. Fill up the fuel tank with fuel (to the level where the float is at the highest position).

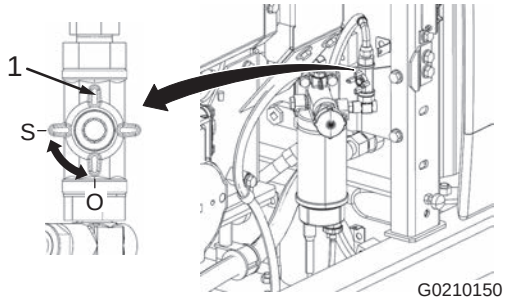

G0210150

18. Loosen the knob of the feed pump (8), pull it out and push it in again, and then operate it until the movement becomes heavy.

    It is not necessary to remove the plugs at the fuel prefilter head and at the fuel main filter head.

    Operate the feed pump (8) to bleed air in the same method when the machine runs out of fuel.
19. After the air bleed is completed, push in the knob of the feed pump (8).
20. After you replace the filter cartridge, start the engine, and run it at low idle for 10 minutes.

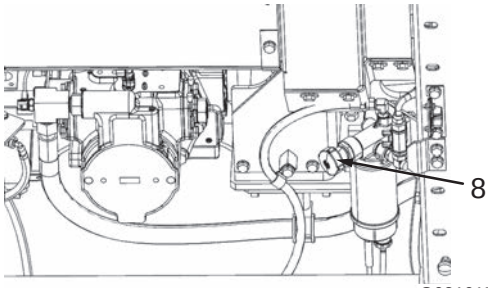

G0210152

21. Examine the filter seal surface and mounting surface of the transparent cup for oil leakage.

    If there is oil leakage, examine the tightening condition of the filter cartridge.
    If oil leaks continuously, remove the filter cartridge in Steps 1 to 6. If damage on the packing surface or pinched foreign material is found, replace the cartridge with a new one, and do the procedure from Steps 7 to 13 again and again.
22. Close the cover at the right side of the machine.
23. You can reset the maintenance time on the monitor. For how to reset the maintenance time, see “Maintenance Item Screen Setting (3-91)”.

How to Examine Swing Pinion Grease Level, Add Grease

Items to be prepared

Ruler

1. Swing the upper structure clockwise and counterclockwise by 3 turns for each, and stop the machine.
2. Remove the bolts (1) (2 pieces) on the top surface of the revolving frame, and remove the cover (2).

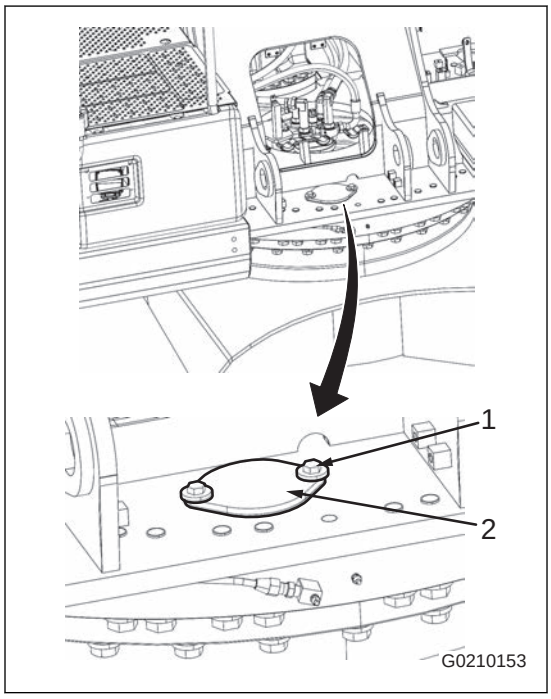

3. Insert the ruler (3) into the grease through the inspection and adjustment hole (A), and make sure that the grease level (S) at the pinion path is 9 mm {0.354 in} or more.

   If the grease level (S) is 9 mm {0.354 in} or below, add grease.
4. Make sure that the grease is not milky white.

   Total capacity of grease: 14.6 ℓ {3.86 US gal}

   If grease is milky white, it needs to be replaced. Consult your Komatsu distributor for replacement.
5. Install the cover (2) with the bolt (1).

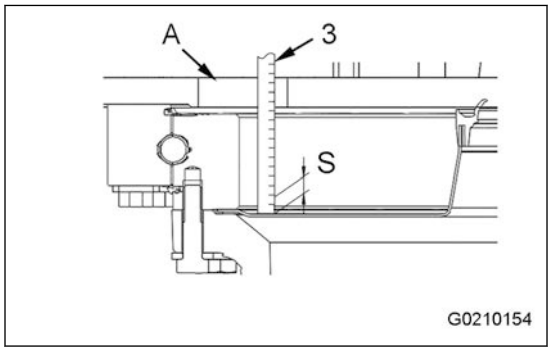

How to Lubricate Swing Circle

Lower the work equipment to the ground.

1. By using a grease pump, pump in grease through the grease fittings shown by arrows. (2 places)
2. After greasing, wipe off any old grease that is pushed out.

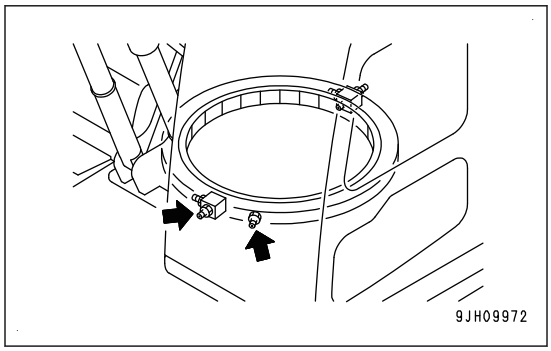

How to Examine and Clean Radiator Fins, Oil Cooler Fins, Aftercooler Fins and Air Conditioner Condenser Fins

WARNING

Put on the protective equipment such as protective eyeglasses and dust mask. If the compressed air, high-pressure water, or steam hits your body directly or if dirt flies over, there is a danger that personal injury is caused.

When you cannot do the operation easily from the ground level, put an applicable step or working platform on the level and hard ground, and do the work in a stable posture.

NOTICE

- **To prevent damage of fins, use the compressed air from a distance, and directly blow to the core with the right angle. If the fin has damage, it can cause water leakage and overheating.**
- **In a dusty jobsite, examine the fins every day, regardless of the maintenance interval.**

1. Open the cover (1) at the left side of the machine.

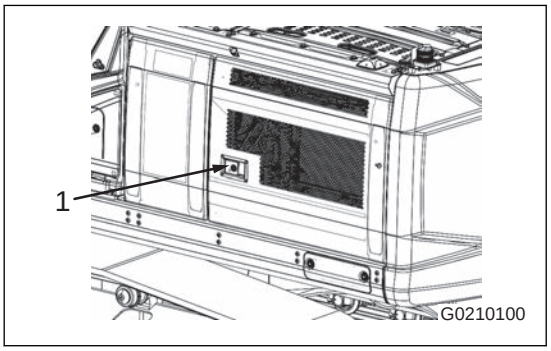

2. Loosen the condenser fixing bolt (2) (1 place), and open the condenser (3).

   NOTICE

   Be careful not to apply force to the tube part of the air conditioner hose at this time.
   If it has damage, refrigerant gas is released, and it causes the air conditioner not to operate.

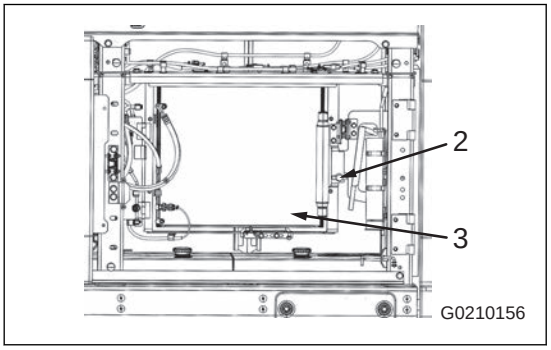

3. Put the condenser fixing rod (4) on the receive part (5) to fix the condenser.

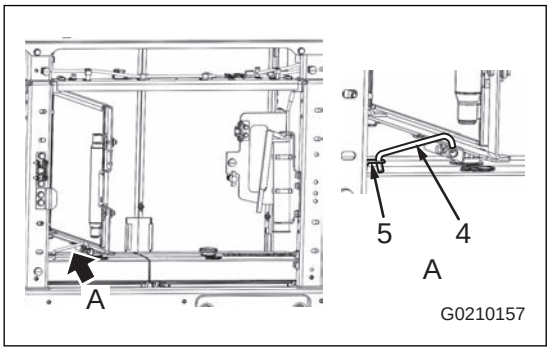

4. Loosen the screws (6) (2 places).
5. When you move down the net (7) while its lower part is pulled to your side, the net (7) is removed from the rail (8). Remove the net (7).

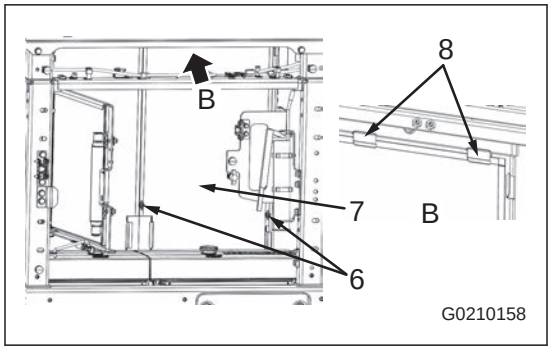

6. When you move the net (9) to the rear side of the machine, the net (9) is removed from the rail (10). Pull the net (9) to your side to remove it.

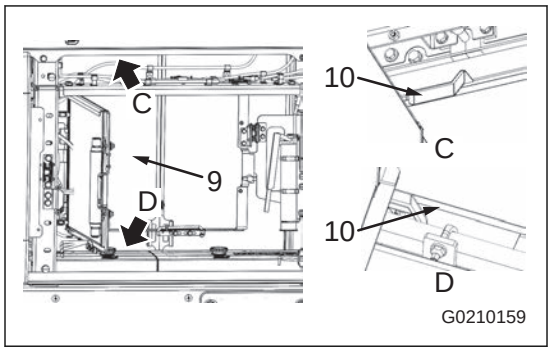

7. Examine the front and rear sides of the radiator fins (11), oil cooler fins (12), aftercooler fins (13), and air conditioner condenser fins (14). If mud, dirt, leaves, or such are attached to the fins, blow them off with compressed air.

   NOTICE

   Steam or water can be used as an alternative for the compressed air.
   But, when you do the powerful steam cleaning (high-pressure machine wash) of the heat exchange equipment (radiator, oil cooler, aftercooler, and air conditioner condenser), keep a sufficient distance from the equipment. If steam cleaning (high-pressure machine wash) is done from near, there is a danger that the internal fins of the heat exchange equipment will be deformed, and this will cause fast clogging and breakage of the equipment.
   Also, be careful not to spray steam or water directly on the electrical components around it.

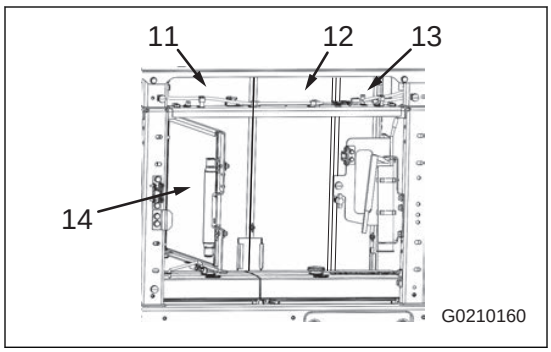

8. After you remove foreign material from the air conditioner condenser, clean it with water from the front side.
9. Examine the rubber hose state, and examine the hose clamp for looseness.
   - If the rubber hose is cracked or becomes weak, replace it.
   - If the hose clamps are loose, tighten them.
10. Remove the undercover (15), and blow out the mud, dirt, and leaves to the external side.
11. Install the cleaned nets (7) and (9) back to the initial positions, and install them with the screw (6).

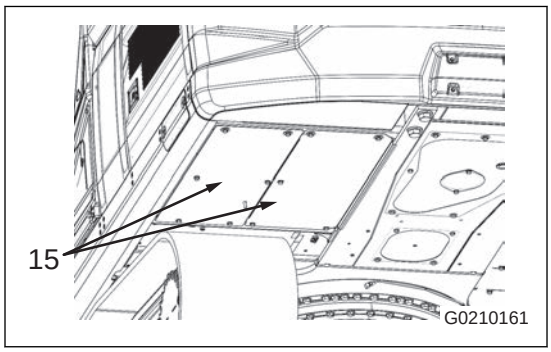

12. Close the condenser (3), and close the knob (2).
13. Install the undercover (15).

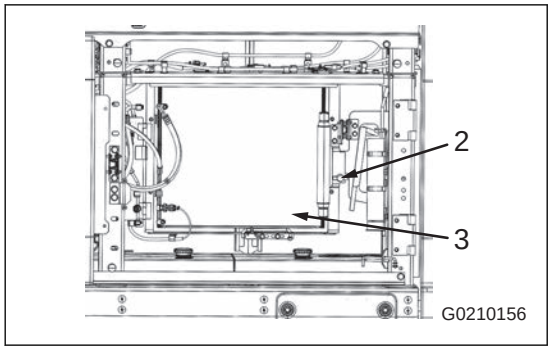

How to Clean Air Conditioner Fresh/Recirc Filters

WARNING

When using compressed air, there is a danger that dirt may scatter and cause personal injury. Always wear protective equipment such as protective eyeglasses and dust mask.

NOTICE

- **The cleaning interval of 500 hours is a rough standard. Clean at shorter intervals in dusty jobsites.**
- **To clean the recirculation air filter, stop the air conditioner, and remove the recirculation air filter from the cab. If water gets to the recirculation air filter while it is installed in the cab, it can cause a failure of the air conditioner.**
- **When you clean the floor, do not let water get on the filter.**

REMARK

If the element becomes clogged, the air flow will be reduced, and there will be a rumbling sound from the air conditioner unit.

How to Clean Recirculation Air Filter

1. Remove the wing bolt (1) of the inspection port at the rear left bottom of the inner side of the operator cab.
2. Remove the recirculation air filter.
3. Clean the filter with compressed air.

   If oil is attached on the filter, or if the filter is very dirty, clean it in a neutral detergent. After you clean it with water, dry it sufficiently before you use it.

   If the clogging of the filter cannot be removed by compressed air, cleaning with water, or every 1 year, replace the filter with a new one.

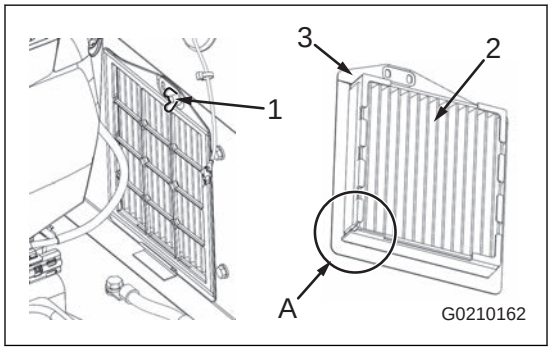

REMARK

- **The recirculation air filter must be installed in the correct direction.**
- **Install it to let the protrusion (A) of the filter (2) engage with the groove of the holder (3).**

4. Install the recirculation air filter.

How to Clean Fresh Air Filter

1. Unlock the cover (4) at the rear left of the operator's cab with the key.
2. Open the cover (4), and remove the filter (5) in the cover while you hold it.

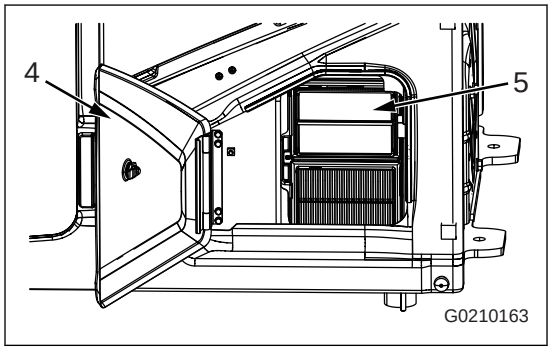

REMARK

- Put your finger into the concave part (D) of the duct (6), and pull it to your side to remove.
  If you hold the filter too strong, it can be deformed or damage is caused.
- If damage is caused to the filter or it is deformed, replace the filter with a new one.

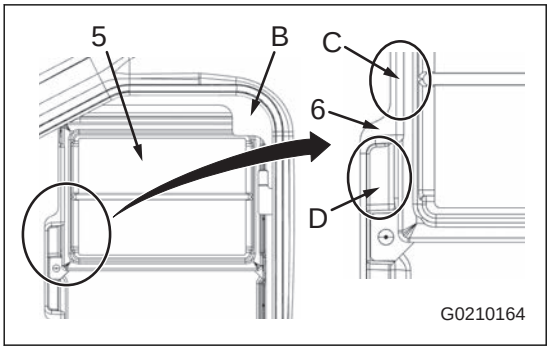

3. Clean the filter (5) with compressed air.

   Blow compressed air in the direction of the arrow at 0.49 MPa{5 kgf/cm^2 ,71 PSI} or below.

   If oil is attached on the filter (1), or if the filter is very dirty, clean it in a neutral detergent. After you clean it with water, dry it sufficiently before you use it.

   If the clogging of the filter cannot be removed by compressed air or cleaning with water, or every 1 year, replace the filter with a new one.

   If damage is caused to the filter or it is deformed, replace the filter with a new one.

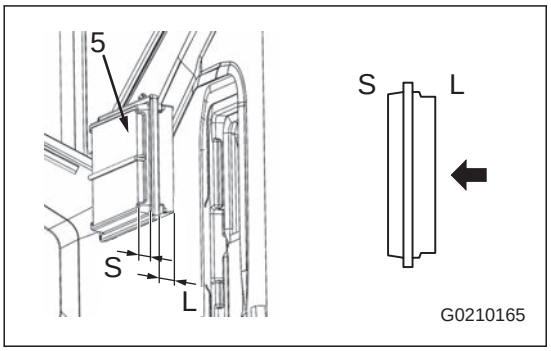

4. After you cleaned it, set the filter (5) to its initial position again.

REMARK

- The fresh air filter must be installed in the correct direction.
- Insert the longer side (L) of the filter (5) into the duct (6) when you install it. If you insert it from the short side (S), the filter (5) is caught with the protrusion (B) of the sheet metal.
- Insert it from the top not to touch the protrusion (B) of the sheet metal.
  If it is not inserted sufficiently or if it is inserted from the bottom by force, the filter can be deformed or have damage.
  After you insert it, engage it to the inner side of the protrusion (C) of the duct (6).

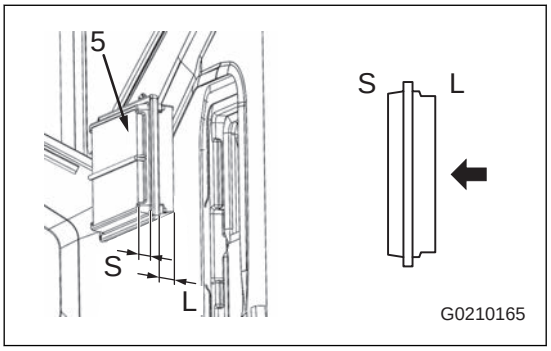

5. Close the cover (4), and lock it with the key.

   After it is locked, be sure to remove the key.

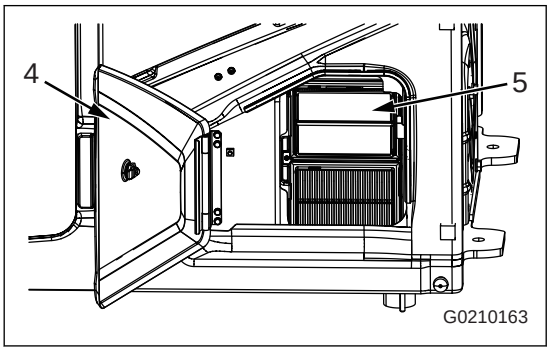

How to Examine Oil Level in Swing Machinery Case, Add Oil

⚠ WARNING

Immediately after the engine is stopped, the parts and oil are very hot, and they can cause burn injury. Wait for the temperature to go down, and then start the work.

1. Remove the dipstick (G), and wipe off oil on it with a cloth.
2. Insert the dipstick (G) into the guide (F) fully.

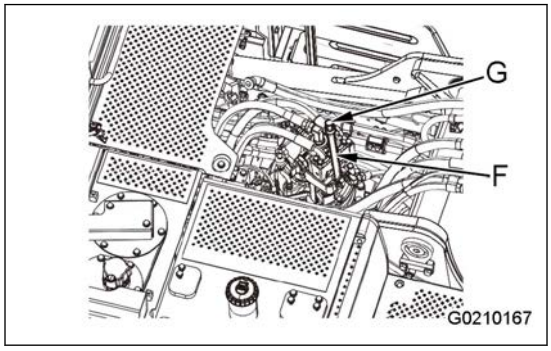

3. Remove the dipstick (G). If the oil level is between marks (H) and (L), it is correct.
4. If the oil level is below the mark (L) on the dipstick (G), add oil through the filler port (F).

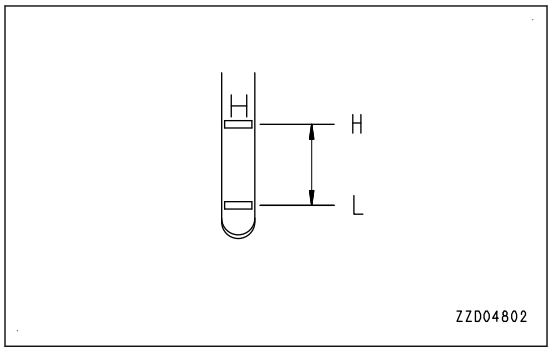

5. If the oil level is above the mark (H) of the dipstick (G), remove the undercover (1), and loosen the drain valve (P) to drain excessive oil.

   When you drain oil, put a container to receive oil below the drain valve (P).
6. After you examine the oil level and add oil, insert the cap of the dipstick (G) into the insertion port.

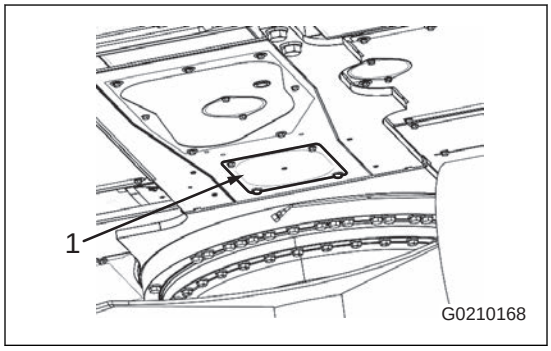

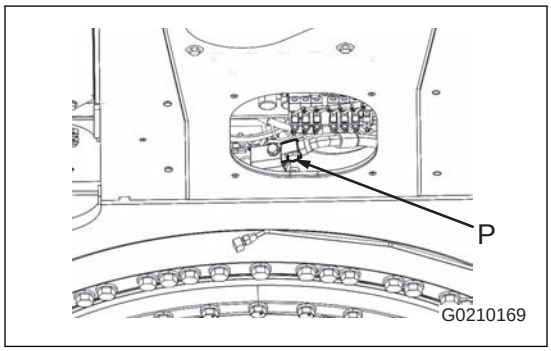

How to Examine Oil Level in Final Drive Case, Add Oil

⚠ WARNING

- **Immediately after the engine is stopped, its parts and oil are still very hot and may cause burn injury. Accordingly, wait until they have cooled down before starting the work.**
- **If there is remaining pressure inside the case, the oil or plug may jump out. Loosen the plug slowly to release the pressure.**
- **Do not stand in front of the plug when you loosen the plug.**

Items to be prepared

Handle

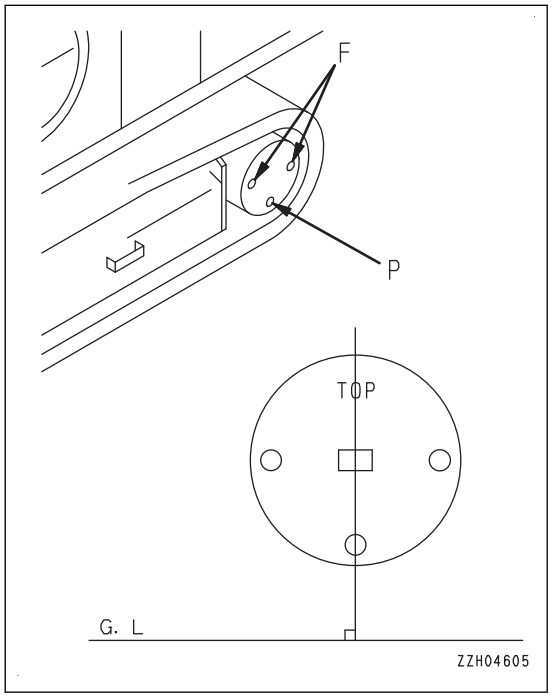

1. Set the TOP mark at the top with the line running on TOP mark and plug (P) perpendicular to the ground surface.
2. Remove plug (F) by using the handle.

   When the oil level is within the range of 10 mm{0.4 in} below the lower edge of the plug hole, the oil level is appropriate.

   If the oil level is low, check it again according to the following procedure.

   1) Install plug (F).
   2) Operate the travel lever to move the machine forward or reverse and rotate the sprocket by 1 turn.
   3) Check in the procedure of 2.
3. If the oil is insufficient, add oil through plug (F) hole.

   Add oil until oil overflows from the hole of plug (F).
4. After the inspection, install plug (F).

   Tightening torque of plugs (F): 58.8 to 78.4 Nm {6 to 8 kgfm, 44 to 58 lbft}

   REMARK

   Plug (F) is installed at 2 places. Add oil through the one with which it is easier to add oil and through which no internal gears are seen.

How to Examine for Looseness of Work Equipment Wiring Clamp, Hardening of Rubber

Visually examine or examine with a finger that the work equipment wiring clamp mounting bolts are not loose and that the rubber does not become hard.
If a problem is found, it must be replaced. Consult your Komatsu distributor for replacement.

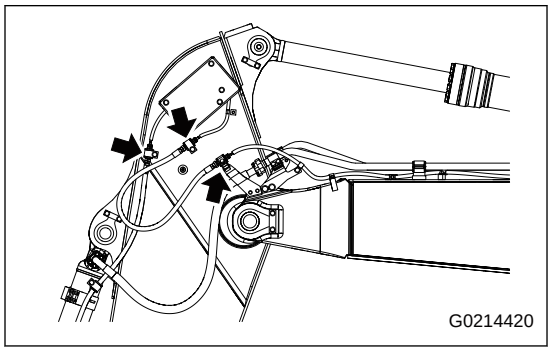

How to Examine and Clean Cylinder Stroke Sensor Case Bolt

⚠ WARNING

If compressed air, high-pressure water, or steam hits your body directly or dirt is scattered by the compressed air, high-pressure water, or steam, there is a danger of personal injury. Wear protective equipment such as protective eyeglasses and dust mask.

Check if the dirt and dust are accumulated in the hexagonal hole of bolt for cylinder stroke sensor case. If the dirt and dust are accumulated, clean it.

NOTICE

If the dirt and dust accumulated in the hexagonal hole of bolt for sensor case are left without cleaning, the dirt and dust stick and bolt cannot be removed.

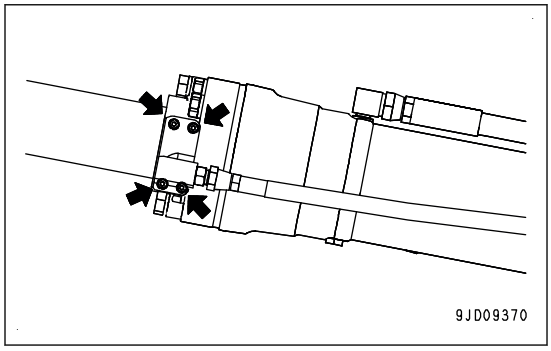

How to Examine Battery and Indicator of Komatsu Maintenance-Free Battery

⚠ WARNING

- **Flammable gas occurs from the battery.**
  There is a danger of explosion. Do not let an open flame be near it.
- **Battery electrolyte is dangerous object. Be careful not to allow the battery electrolyte to get in contact with your eyes, skin or clothes.**
  If the battery electrolyte gets into your eyes, immediately clean your eyes with a large quantity of clean water, and consult a doctor.
  If the battery electrolyte gets on your clothes or skin, immediately clean it with a large quantity of clean water.
- **You cannot add battery electrolyte.**
- **Do not use it while the indicator is transparent (battery electrolyte is not sufficient). Explosion can occur.**
- **Do not use a direct air blow or dry cloth to clean the battery. Use a wet cloth to prevent fire or explosion from static electricity.**

Examine it before you start the machine.

The indicator that shows the battery charge level and battery electrolyte level is installed on the top of the battery.

See the display state, and obey the instruction.

The display of the indicator cannot be shown correctly at low temperature in some cases.

1. Open the cover (1) at the rear left side of the machine. The battery is installed at the part (A).

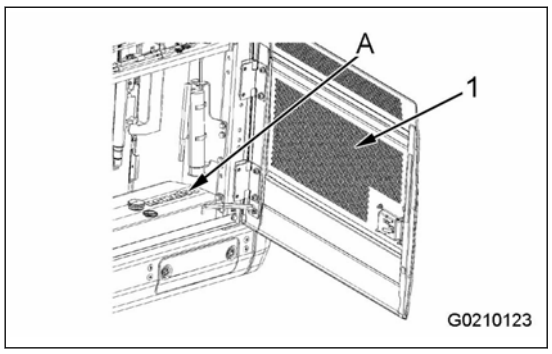

2. Remove the nuts (2) (2 places) on the top surface of the battery, and remove the covers (3) (2 places).

   REMARK

   The threaded parts of the nuts (2) are made of resin, and the thread surface goes back to the initial condition even if the nuts are tightened continuously. The tightening force keeps unchanged all the time and does not become light. This is not an abnormal condition.

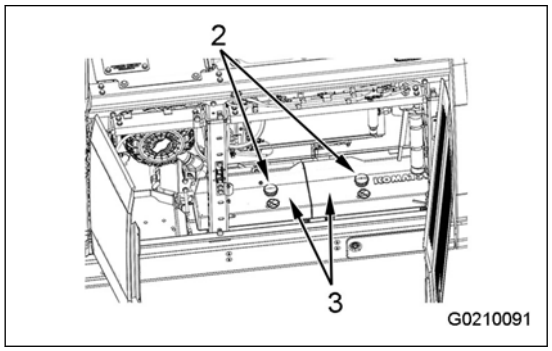

3. Examine the battery condition with the indicator.
   - The indicator (4) (green) shows that the battery is in the normal condition.
   - The indicator (5) (black) shows that the battery needs to be charged. Obey the instruction manual of the battery charger, and charge it correctly.
   - The indicator (6) (transparent) shows that the battery electrolyte level is low. If you use it as it is, explosion can occur. Be sure to replace the battery with a new one. You cannot add battery electrolyte.

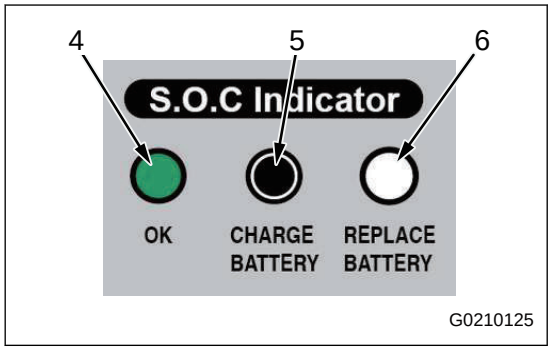

4. Examine the items that follow for every 500 hours maintenance.
   - Appearance of battery such as crack and discoloration
   - Install battery

If problems that follow are found, consult your Komatsu distributor.

- When the engine is not easy to start
- When the low battery voltage error occurs

How to Examine and Adjust Air Conditioner Compressor Belt Tension

The followings are the periodic maintenance items for the air conditioner. Perform inspection and maintenance to use the air conditioner effectively.

How to Examine Air Conditioner Compressor Belt

1. Remove the bolts (2) (3 pieces).
2. Remove the guard (1).

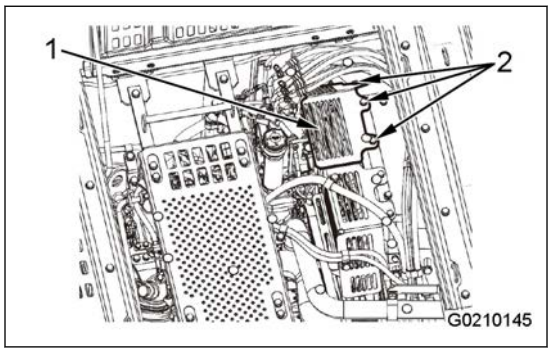

3. Push the middle point of the drive pulley (A) and compressor pulley (B) with a finger (approximately 58.8 N {6 kgf}).

   When the deflection (C) is 6 to 9 mm {0.23 to 0.35 in}, the belt tension is normal.

   If the deflection is out of the standard, adjust it to the standard value.

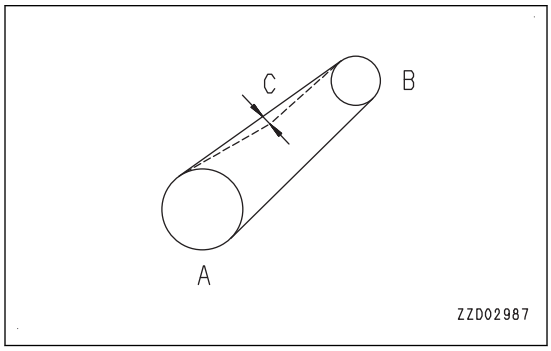

How to Adjust Air Conditioner Compressor Belt

1. Remove the bolts (2) (3 pieces).
2. Remove the guard (1).

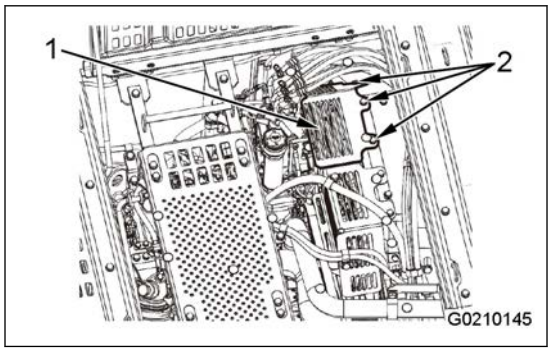

3. Loosen the lock nut (3), and tighten the adjustment bolt (4) until its front end touches the bracket.
4. Loosen the bolts (5) (2 pieces).

   It is not necessary to remove the bolts (5). Also, do not loosen them too much.

   REMARK

   When you loosen the bolt (5), the compressor (7) can move while it uses the mounting position of the bolt (6) as a pivot point.

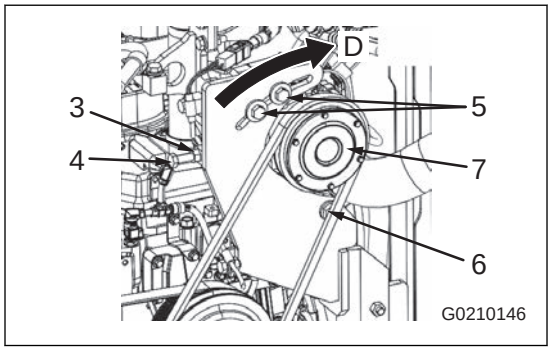

5. Tighten the adjustment bolt (4), move the compressor (7) in direction of (D), and apply the tension on the compressor belt.

6. Push the middle point of the drive pulley (A) and compressor pulley (B) with a finger (approximately 58.8 N {6 kgf}).

   When the deflection (C) is 6 to 9 mm {0.24 to 0.35 in}, the belt tension is normal.

   If the deflection is out of the standard range, do Steps 4 to 6 again and again.

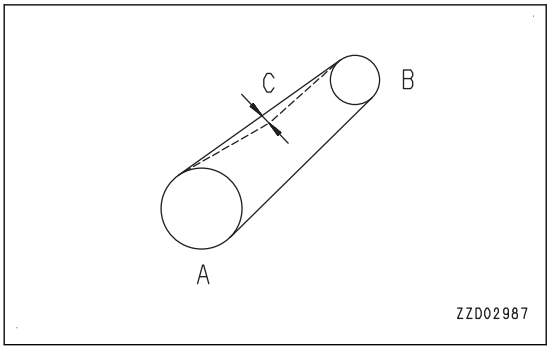

7. When the belt tension becomes the correct state, tighten the bolts (5) (2 pieces) to fix it.

   Tightening torque: 98 to 123 Nm {10 to 12.5 kgfm, 72.3 to 90.4 lbft}

8. Loosen the adjustment bolts (4) by 3 to 5 turns, tighten the lock nut (3) to fix it.

   (Fix it at the position where the clearance to the bracket is 5 to 10 mm {0.197 to 0.394 in} .)

   Tightening torque: 67 to 83 Nm {6.8 to 8.5 kgfm, 49.2 to 61.5 lbft}

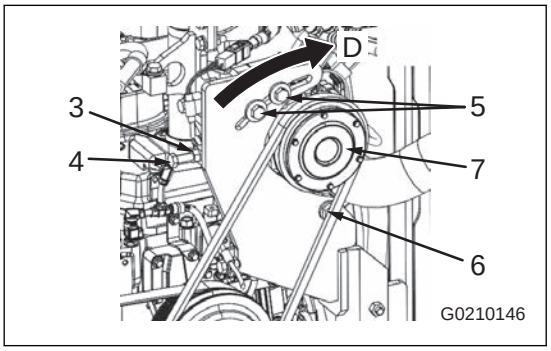

9. After you fix it, examine the belt tension again to make sure that it is correct.

   If the tension is out of the correct range, adjust it again.

10. Examine each pulley for damage, and the V-groove and V-belt for wear. Make sure that the V-belt does not touch the bottom of the V-groove.

11. Replace the belt with a new one if the belt is stretched and has no allowance for adjustment, or slipping sound or squeak comes out because of cuts or cracks of the belt.

NOTICE

- **When you replace the V-belt, do the adjustment again after 1 hour of operation.**
- **When you replace the V-belt, be careful not to cause damage to the electric wiring of the cooling fan.**
- **Examine each pulley for damage, and the V-groove and V-belt for wear. Make sure that the V-belt does not touch the bottom of the V-groove.**
- **Replace the belt with a new one if the belt is stretched and has no allowance for adjustment, or slipping sound or squeak comes out because of cuts or cracks of the belt.**

Every 1000 Hours Maintenance

Maintenance for every 100, 250 and 500 hours should be performed at the same time.

How to Change Oil in Engine Oil Pan and Replace Engine Oil Filter Cartridge

⚠ WARNING

Immediately after the engine is stopped, the parts and oil are very hot, and they can cause burn injury. Wait for the temperature to go down, and then start the work.

Refill capacity of oil pan: 18 ℓ {4.76 US gal}

Items to be prepared

- Container to receive drained oil
- Filter wrench

1. Remove the undercover directly below the engine at the bottom of the machine, and put a container to receive the drained oil directly below the drain valve (P).
2. Pull down the lever of the drain valve (P) slowly to drain oil. Be careful not to get oil on yourself. After oil is drained, pull up the lever to close the valve.

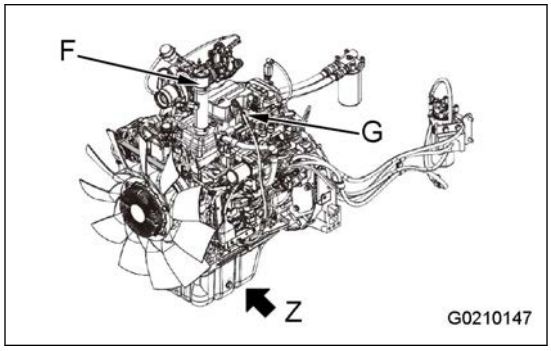

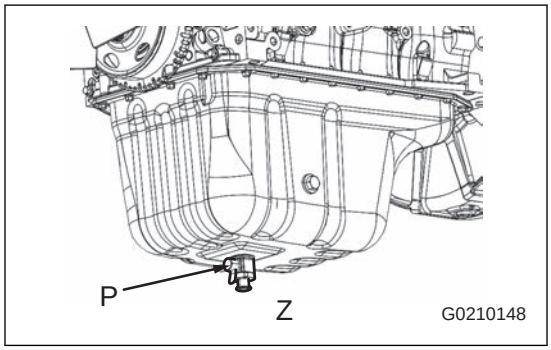

3. Open the right rear cover.
4. Turn the filter cartridge (1) counterclockwise with the filter wrench to remove it.
5. Clean the filter head (2). Fill the new filter cartridge with clean engine oil, apply clean engine oil on the packing and threaded parts of the new filter cartridge (or apply thin layer of grease), and then install it.

   REMARK

   Make sure that there is no packing is attached to the filter head (2). If the packing is attached to the filter cartridge, it can cause oil leakage.

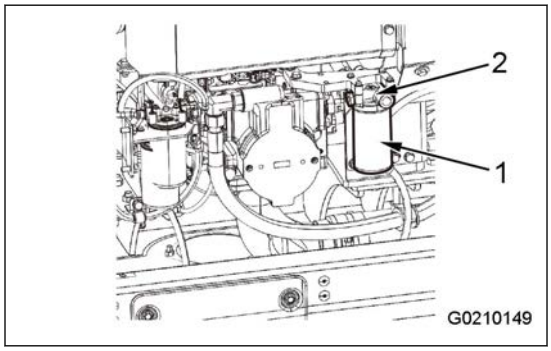

6. When you install the cartridge, tighten it until the packing surface touches the seal surface of the filter head (2), and then tighten it 3/ 4 to 1 turn.

7. After you replace the filter cartridge, open the engine hood, and add engine oil through the oil filler port (F) to the range between the marks H and L on the dipstick (G).
8. Run the engine at idle for a while, stop the engine, and make sure that the oil level is between marks H and L on the dipstick.
9. Close the right rear cover.
10. Install the undercover.
11. You can reset the maintenance time on the monitor. For how to reset the maintenance time, see “Maintenance Item Screen Setting (3-91)”.

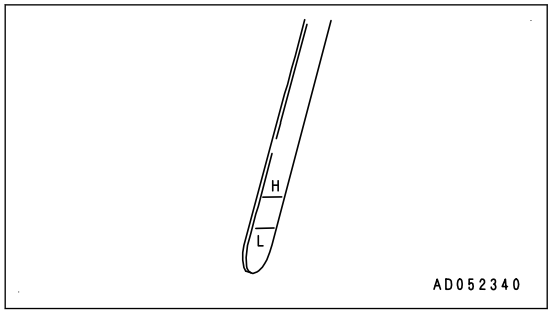

REMARK

When the ambient temperature is low, water or emulsifier can attach to the dipstick or oil filler cap, or the drained oil can be milky white because of water vapor in the blowby gas. But if the coolant level has not decreased, it is not a problem.
There is no problem even if the emulsified material cannot be removed fully after you change oil.

How to Change Oil in Swing Machinery Case

⚠ WARNING

Immediately after the engine is stopped, the parts and oil are very hot, and they can cause burn injury. Wait for the temperature to go down, and then start the work.

Refill capacity: 6.5 ℓ {1.72 US gal}

Items to be prepared

- Container to receive drained oil

1. Remove the inspection hole cover (A).
2. Put a container to receive drained oil below the drain valve (P) at the bottom of the machine.

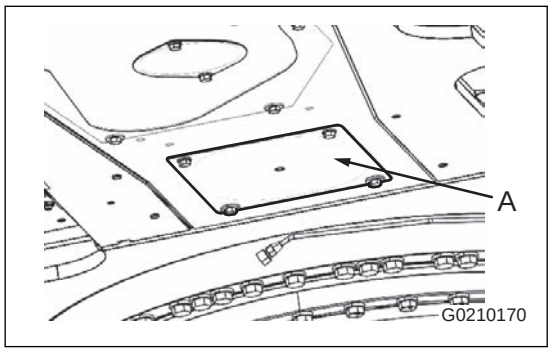

3. Loosen the drain valve (P) at the bottom of the machine, drain oil, and then tighten it.

   REMARK

   - If oil flows in thin line, it is no problem to stop the drain work.
   - When the ambient temperature is low, swing the machine gradually to increase the oil temperature before you drain oil. But, do not swing the upper structure while you drain oil. It can cause damage to the swing machinery.

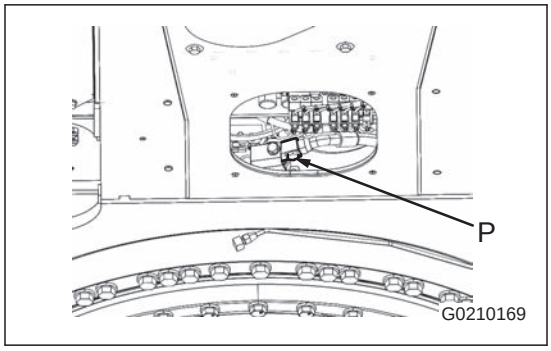

4. Remove the cap of the filler port (F).
5. Add oil by the refill capacity.
6. Examine the oil level. For details, see “How to Examine Oil Level in Swing Machinery Case, Add Oil (4-67)”.
7. You can reset the maintenance time on the monitor. For how to reset the maintenance time, see “Maintenance Item Screen Setting (3-91)”.

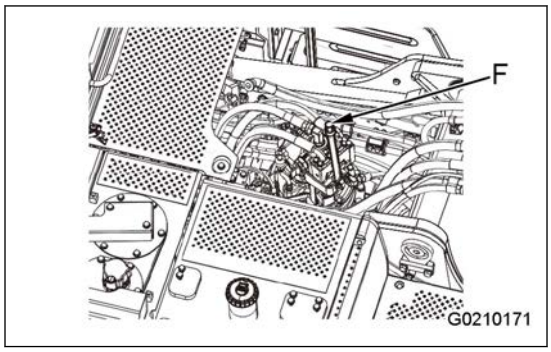

How to Examine Oil Sump in Flywheel Housing

Do it every 1000 hours or every 1 year that comes first.

Items to be prepared

- Container to receive drained oil

1. Remove the cover (1) on the right bottom of the machine.
2. Put a container to receive drained oil below the damper case drain plug (2).

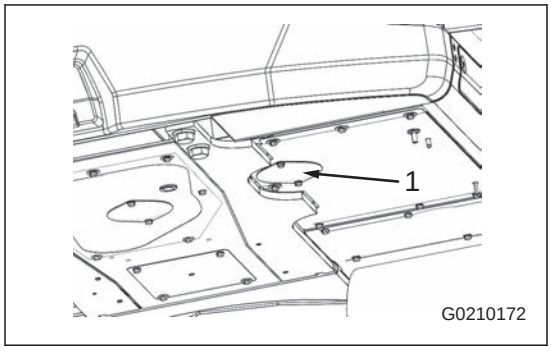

3. Move the handle to the position (A), and make sure that no oil comes out.

   NOTICE

   If oil comes out, tell your Komatsu distributor of the volume of oil which came out.

4. Move the handle back to the position (B), and close the dumper case drain valve (2).
5. Install the undercover (1).

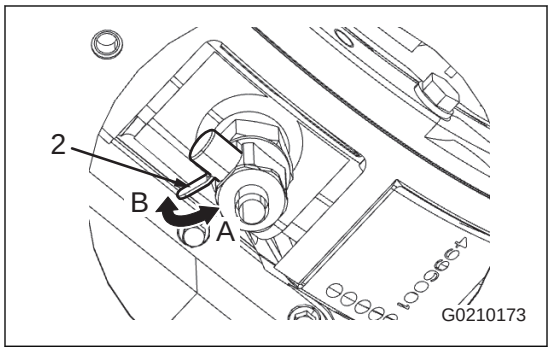

How to Replace Fuel Main Filter Cartridge

WARNING

- **After the engine is stopped, all the parts are very hot. Do not replace the filter immediately. Wait for all of parts to cool down before you start the work.**
- **While the engine is in operation, a high-pressure occurs in the engine fuel piping system. When you replace the filter, wait for 30 seconds or more after the engine is stopped to let the internal pressure go down.**
- **Do not let an open flame be near it.**
- **Be careful when you open the air bleed plug of the fuel filter head. There can be a remaining pressure, and oil can spurt out.**

NOTICE

- **Komatsu genuine fuel filter cartridges use a special filter that has high filtration efficiency. Komatsu recommends the use of Komatsu genuine parts for replacement parts.**
- **The common rail fuel injection system used on this machine consists of more accurate parts than those in the conventional injection pump and nozzles. If a fuel filter cartridge other than Komatsu genuine part is used, dirt or foreign material can be mixed and cause failure to the injection system. Do not use an equivalent product.**
- **Before the replacement operation, keep the area around the fuel main filter clean to prevent entry of foreign material.**
- **During inspection and maintenance of the fuel system, be very careful to prevent entry of foreign material. If dirt attaches to the fuel system, clean it fully in fuel.**

Items to be prepared

- Container to receive fuel
- Filter wrench

1. Open the cover at the right of the machine.
2. Set the valve (1) at the top of the fuel prefilter to the CLOSE position (S).
3. Put a container to receive fuel below the filter cartridge (2).

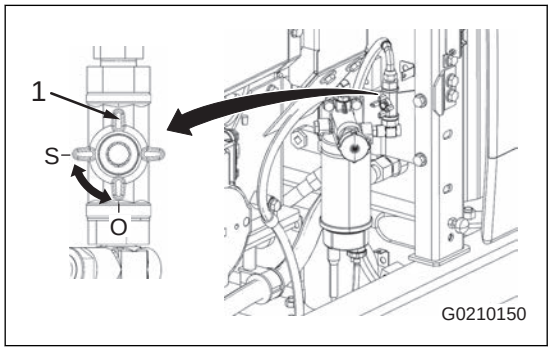

4. Turn the filter cartridge (2) counterclockwise with the filter wrench to remove it.

   After you remove the filter cartridge, fuel drops from the filter head.

   To prevent flow out of fuel, be sure not to keep the machine without the filter cartridge.

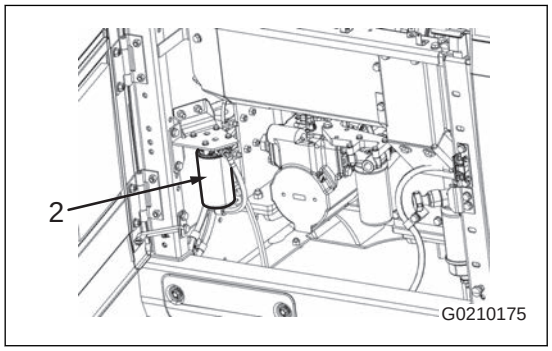

5. Clean the filter head. Apply thin layer of oil to the packing surface of the new filter cartridge, and install it to the filter head.

   Replace the inner seal (3) with a new one.

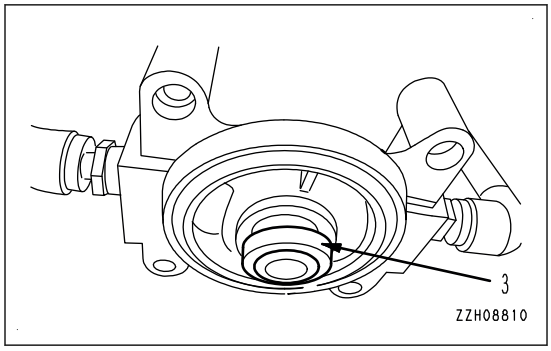

NOTICE

- **Make sure that there is no foreign material in the new filter before you install it.**
- **Examine the inner part of the fuel filter body. If foreign material is found, remove it with a cloth.**
- **Do not fill the new filter cartridge with fuel.**
- **Remove the cap (B) at the center, and install the filter cartridge.**

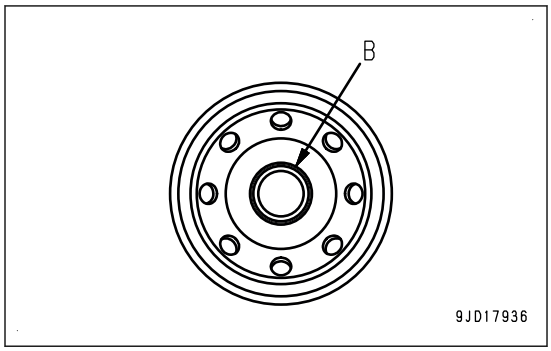

6. When you install the cartridge, tighten it until the packing surface touches the seal surface of the filter head, and then tighten it 3/4 turn again.

   If you tighten the filter cartridge too much, the packing can have damage and this can cause fuel leakage. If you tighten the filter cartridge too loose, fuel leakage occurs from the packing. Be sure to obey the tightening angle.

   When you tighten it with a filter wrench, be very careful not to make dents or cause damage to the filter.

7. Set the valve (1) at the top of the fuel prefilter to the OPEN position (O).
8. After you replace the filter cartridge (2), bleed air.
9. You can reset the maintenance time on the monitor. For how to reset the maintenance time, see “Maintenance Item Screen Setting (3-91)”.

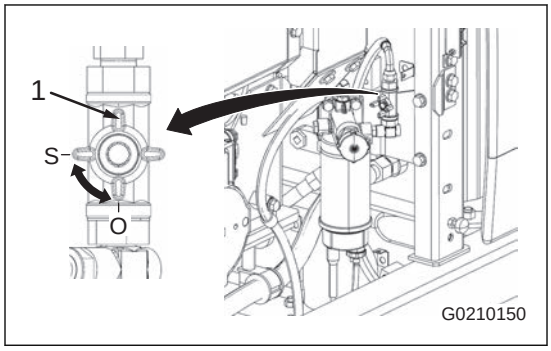

If Engine Does Not Start

1. Fill up the fuel tank with fuel (to the level where the float is at the highest position).
2. Loosen the knob of the feed pump (4), pull it out and push it in again, and then operate it until the movement becomes heavy.
3. Push in the knob of the feed pump (4), and tighten it.
4. After you replace the filter cartridge, start the engine, and run it at low idle for 10 minutes.

   If the engine does not start, do the procedure of Steps 2 and 3 again and again.

   Keep away from the engine when you start the engine or during the operation.
5. Examine the filter seal surface for oil leakage.

   If there is oil leakage, examine the tightening condition of the filter cartridge.

   If the oil leakage continues, remove the filter cartridge.

   If foreign material is caught, replace the cartridge with a new one.

   For details, see “How to Replace Fuel Main Filter Cartridge (4-76)”.
6. After the engine starts, run it for approximately 5 minutes to fully bleed air from the fuel circuit.
7. After approximately 5 minutes, stop the engine. And then start the engine as usual.

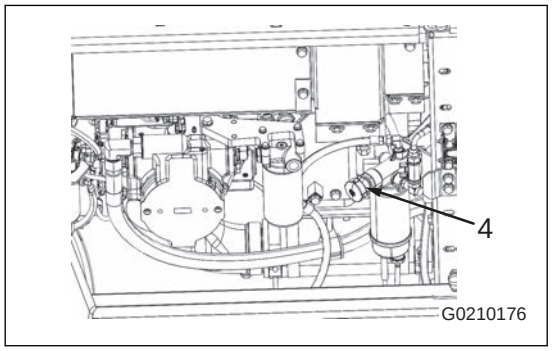

How to Examine All Tightening Points of Engine Intake Pipe Clamps

Ask your Komatsu distributor for checking the tightening of the clamps between the air cleaner - turbocharger - aftercooler - engine.

How to Examine and Release Nitrogen Gas Charge Pressure in Accumulator (For Breaker)

(If equipped)

A special tool is needed for checking and charging of nitrogen gas. Ask your Komatsu distributor to perform this work.

How to Replace Hydraulic Tank Breather Element

⚠ WARNING

- **Immediately after the engine is stopped, the parts and oil are very hot, and they can cause burn injury. Wait for the temperature to go down, and then start the work.**
- **When you remove the oil filler port cap, there is a possibility that oil spurts out. Slowly turn the oil filler port cap to release the internal pressure, and then remove it carefully.**

Items to be prepared
- Hexagonal wrench (M6, width across flats 5 mm {0.197 in})

1. Insert the key into the key slot of the breather assembly (F) at the top of the hydraulic tank.

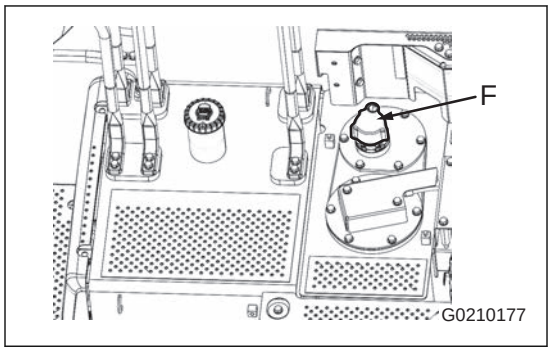

2. Turn the key to “OPEN” position (A), and remove the key.
3. Turn the breather assembly (F) counterclockwise to remove it.

   REMARK

   While the breather assembly is turned counterclockwise, the internal key cylinder is engaged, and a click sound comes out. Turn it continuously to remove it.
   If you turn the assembly counterclockwise while the key is at “CLOSE” position (B), it does not turn correctly.

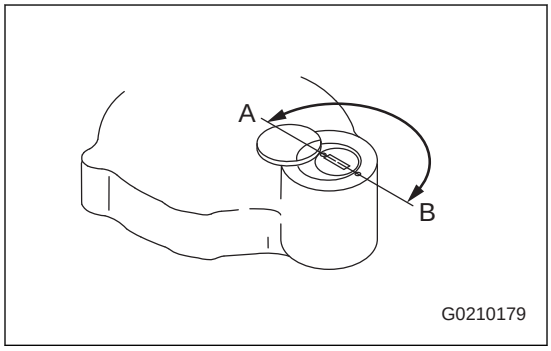

4. Insert the key into the key slot, turn it to “CLOSE” position (B), and remove the key.
5. Loosen the bolts (1) behind the breather assembly, and remove the valve assembly (2) and element (3).

   REMARK

   When the key is at “OPEN” position (A), the inner key cylinder is engaged, and the valve assembly (2) and cover (4) cannot be removed.

6. Replace the element (3) with a new one.

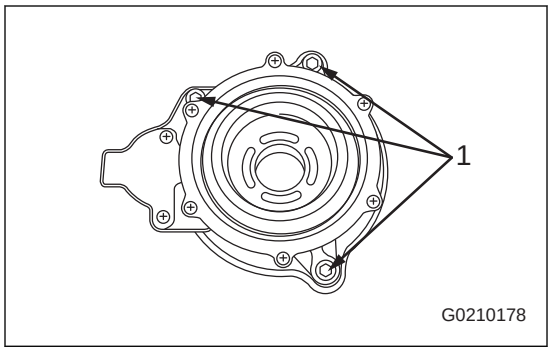

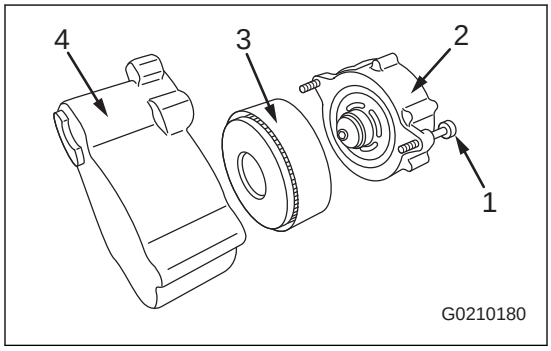

7. Install the valve assembly (2) and element (3) to the cover (4) with the bolt (1).

   Tightening torque of bolt (1): 4 to 6 Nm {0.41 to 0.61 kgfm, 2.97 to 4.41 lbft}

8. Insert the key into the key slot, turn it to “OPEN” position (A), and remove the key.
9. Install the breather assembly to the hydraulic tank.
10. Insert the key into the key slot, turn it to “CLOSE” position (B), and remove the key.
11. You can reset the maintenance time on the monitor. For how to reset the maintenance time, see “Maintenance Item Screen Setting (3-91)”.

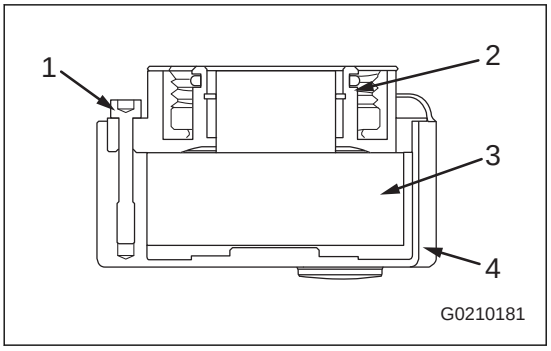

How to Replace DEF Tank Breather Element

WARNING

Do not replace the element immediately after you stop the engine.

NOTICE

- **Komatsu recommends the use of Komatsu genuine parts for replacement parts.**
- **If the machine is operated without the DEF tank breather element, or with the element other than Komatsu genuine parts, foreign materials go into the DEF pump and DEF injector in some cases, which will cause a failure of the machine. Do not operate the machine without the DEF tank breather element. Do not use the element other than Komatsu genuine parts.**
- **The DEF tank breather element cannot be cleaned. Flushing or regeneration of the element will degrade the performance of the element, and it can cause damage to the DEF tank. You must not use the element again.**
- **Be sure to stop the engine and clean around the DEF tank before you start the replacement work.**
- **After the engine is stopped, the DEF system devices automatically purge DEF in the DEF injector and DEF pump, and let it go back to the DEF tank to prevent malfunction of the devices caused by freezing of the DEF or deposition of urea.**
  Replace the element after the DEF system devices stops operation. The devices keep in operation for some minutes after the engine stops.
- **If the DEF tank breather element cannot be assembled correctly, it can cause leakage of DEF. Replace the element in the correct procedure.**

1. Loosen 2 bolts, and remove the fuel tank front cover at the right side of the machine.

   Tilt the fuel tank front cover as shown in the figure, and pull it up.

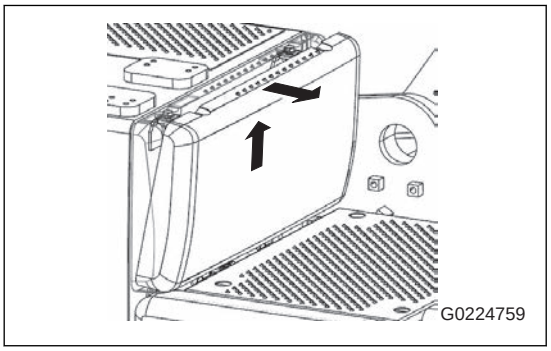

2. Remove the nut (2) of the breather assembly (1) on the top surface of the DEF tank, and remove the cover (3).
3. Replace the element (4) with a new one.
4. Install the cover (3) and nut (2).

   To protect the threaded part of the nut, tighten the nut (2) by hand until it is seated, and tighten it by 15 to 25 ° with a tool.

   NOTICE

   If you remove the breather assembly (1) for replacement, apply a tool to the bolt (5) and tighten it.
   Tightening torque: 6.5 to 8.5 Nm {0.66 to 0.87 kgfm, 4.8 to 6.3 lbft}
5. Install the DEF tank cover at the right side of the machine.
6. You can reset the maintenance time on the monitor. For how to reset the maintenance time, see “Maintenance Item Screen Setting (3-91)”.

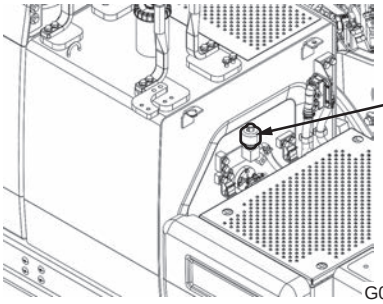

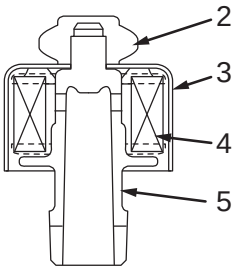

How to Examine Fan Belt Tension and Auto-Tensioner and Replace Auto-Tensioner

The fan belt tension is automatically adjusted by auto-tensioner (belt tensioner). Normally, no belt tension adjustment is required. But, if there is a problem of the tension of fan belt, you need to check the fan belt and auto-tensioner.

Special tools are required for the inspection and replacement of auto-tensioner.

Consult your Komatsu distributor.

Every 2000 Hours Maintenance

Maintenance for every 100, 250, 500 and 1000 hours service should be performed at the same time.

How to Change Oil in Final Drive Case

⚠ WARNING

- **Wait for the temperature of the machine to go down, and then start the work. Immediately after the engine is stopped, the parts and oil are very hot, and they can cause burn injury.**
- **Loosen the plug slowly to release the pressure. If there is remaining pressure in the case, the oil or plug can jump out.**
- **Do not stand in front of the plug when you loosen the plug.**

Refill capacity : 4.1 ℓ {1.08US gal} (each of right and left)

Items to be prepared

- Container to receive drained oil
- Handle

1. Set the TOP mark to up, and stop the machine to set the TOP mark and plug (P) vertically to the ground.
2. Put a container to receive the drained oil below the plug (P).
3. Remove the plugs (P) and (F) with the handle, and drain oil.

   Examine the O-ring on the plug for damage. Replace it if necessary.
4. Tighten the plug (P).
5. Add oil through the hole of the plug (F).

   Plug (F) is installed at 2 places. Add oil through the one with which it is easier to add oil and through which no internal gears are seen.
6. When oil flows out from the hole of the plug (F), install the plug (F).

   Tightening torque for plugs (P) and (F) : 58.8 to 78.4 Nm {6.0 to 8.0 kgfm, 43.4 to 57.9 lbft}
7. You can reset the maintenance time on the monitor. For how to reset the maintenance time, see “Maintenance Item Screen Setting (3-91)”.

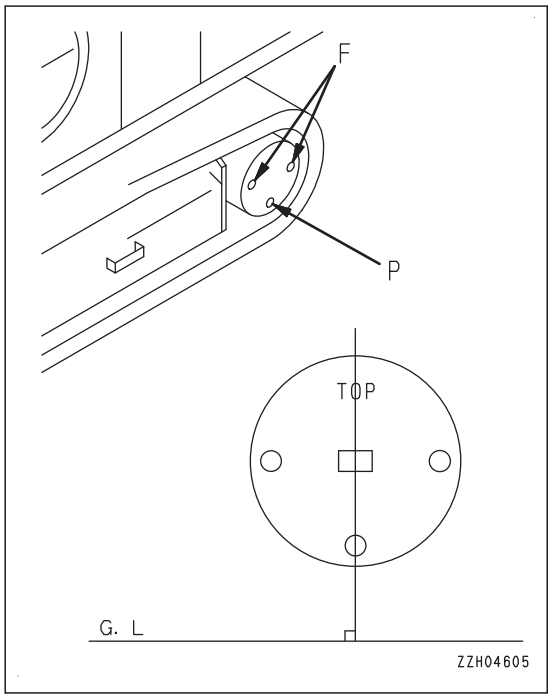

How to Examine Function of Accumulator for Control Circuit and Release Internal Pressure in Hydraulic Circuit

⚠ WARNING

The accumulator is charged with high-pressure nitrogen gas, so improper operation may cause an explosion, which will lead to serious injury or death. For handling, always observe the following.

- **The pressure in the hydraulic circuit cannot be completely removed. When removing the hydraulic equipment, do not stand in the direction that the oil spurts out when performing the operation. In addition, loosen the bolts slowly when performing the work.**
- **Do not disassemble it.**
- **Do not bring open flame close to it or do not dispose of it in fire.**
- **Do not perform drilling, welding or flame-cutting.**
- **Do not hit or roll it, or subject it to any impact.**
- **When disposing of it, the gas must be released. Ask your Komatsu distributor to have this work performed.**

NOTICE

- **If the nitrogen gas charge pressure in the accumulator is low and operations are continued, it becomes impossible to release the remaining pressure inside the hydraulic circuit if a failure occurs on the machine.**
- **The nitrogen gas charge pressure in the accumulator can decrease in a short time by the environment or the way it is used, and the pressure cannot be accumulated.**
  If the nitrogen gas charge pressure decreases, recharge the nitrogen gas in response to the installed accumulator, or you must replace the accumulator. At that time, consult your Komatsu distributor.

Function of PPC Circuit Accumulator

This accumulator (for PPC circuit) is installed to the solenoid valve. Even if the engine is stopped while the work equipment is raised, pilot oil pressure can be supplied to the work equipment control valve with the pressure of the compressed nitrogen gas in the accumulator to operate the spool and lower the work equipment by its own weight.

Examine Function of Accumulator

⚠ CAUTION

Before inspection, make sure that there is no person or obstacle around the machine.

Examine the nitrogen gas charge pressure as follows.

1. Stop the machine on a stable and level ground.
2. Set the work equipment in the maximum reach posture (arm fully OUT, bucket fully DUMP), and keep it at the height 1.5 m {4 ft 11 in} above the ground.

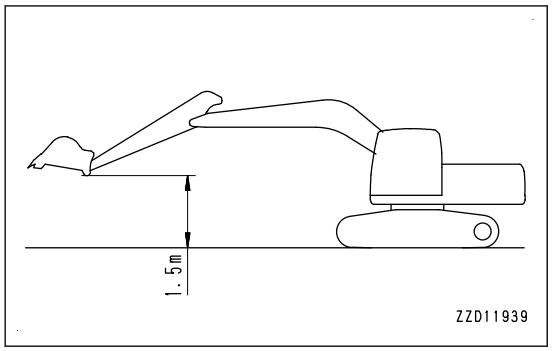

3. Do the procedure that follows in 15 seconds.

   After the engine stops, the accumulator pressure decreases gradually. You can examine only just after the engine stops.

   1) Keep the work equipment at the maximum reach posture, turn the starting switch to the OFF position (A), and stop the engine.
   2) Turn the starting switch to the ACC position (B).

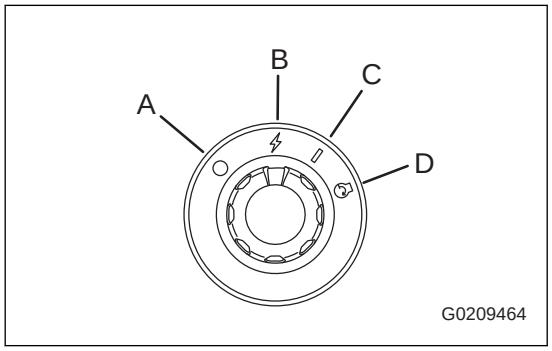

   3) Operate the operating part (g) of the lock lever to set it to the FREE position (F). Operate the work equipment control lever in the boom LOWER direction to the stroke end, and make sure that the work equipment is lowered to the ground.

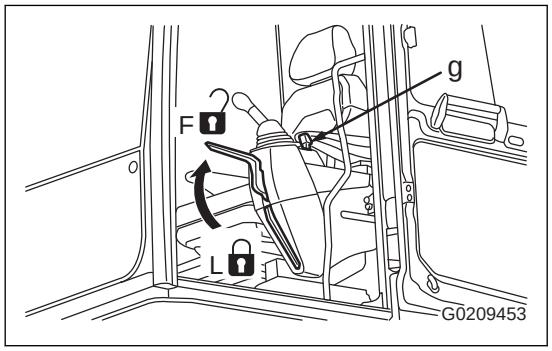

If the work equipment goes down with its own weight and it touches the ground, the accumulator is normal.

If the work equipment does not go down or stops at the middle point, the charged pressure of the gas in the accumulator for the hydraulic circuit is possibly low. Consult your Komatsu distributor for inspection.

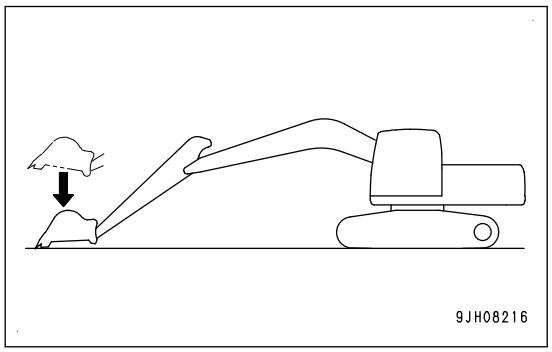

The inspection is completed. After the inspection is completed, set the lock lever to the LOCK position (L), and turn the starting switch to the OFF position (A).

How to Release Internal Pressure in Hydraulic Circuit

1. Lower the work equipment to the ground.

   Close the attachment such as demolition crusher.

2. Operate the operating part (g) of the lock lever to set it to the LOCK position (L).

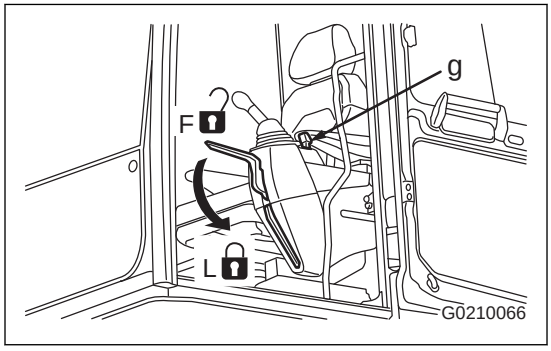

   For machines with attachment, set the lock pin of the attachment control pedal to the position (c) where you can operate the pedal.

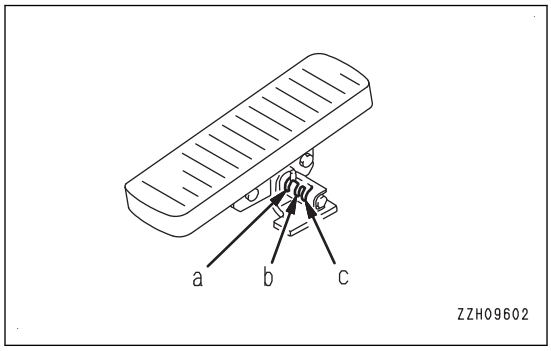

3. Do the procedure as follows in 15 seconds or below.

   After the engine stops, the accumulator pressure decreases gradually. You can examine only just after the engine stops.

   1) Turn the starting switch to the OFF position (A), and stop the engine.
   2) Turn the starting switch to the ACC position (B).

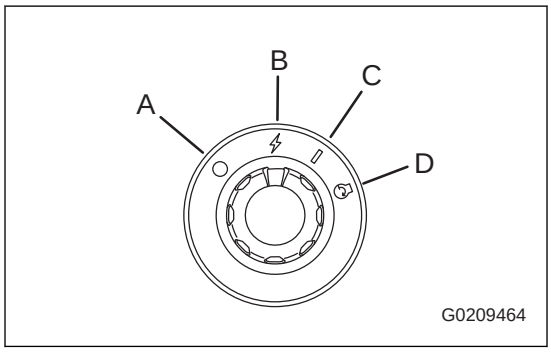

   3) Operate the operating part (g) of the lock lever to set it to the FREE position (F). Operate the work equipment control lever and attachment control pedal (if equipped) fully to forward, rearward, right, and left to release the pressure in the control circuit.

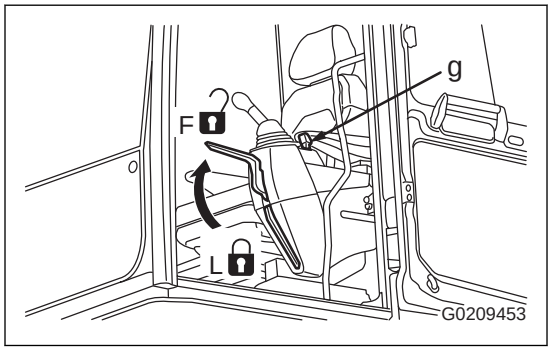

4. Operate the operating part (g) of the lock lever to set it to the LOCK position (L), and turn the starting switch to the OFF position (A).

For machines with attachment, set the lock pin to the position (a) not to operate the attachment control pedal.

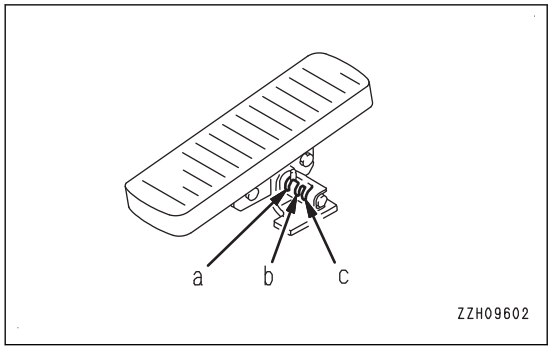

How to Examine Alternator

Ask your Komatsu distributor to have the alternator checked.

If the engine is started frequently, have this inspection performed every 1000 hours.

How to Examine and Adjust Engine Valve Clearance

Special tools are necessary for inspection and maintenance. Ask your Komatsu distributor to perform this work.

How to Replace DEF Filter

⚠ WARNING

Immediately after the engine is stopped, all the parts are very hot. Do not replace the filter immediately. Wait for all of parts to cool down before you start the work.

NOTICE

- **Komatsu recommends the use of Komatsu genuine parts for replacement parts.**
- **Do not operate the machine without the DEF filter. Do not use the filter other than Komatsu genuine parts. Foreign materials go into the DEF pump and DEF injector, and it causes failure of the machine.**
- **Do not use the DEF filter again. Even after the cleaning or regeneration is done, its filtering performance will derate, and it can cause damage to the component.**
- **Replace the DEF filter in the correct procedure. If the DEF filler cannot be assembled correctly, it can cause leakage of DEF.**

After the engine is stopped, the DEF system devices automatically purge DEF in the DEF injector and DEF pump, and let it go back to the DEF tank to prevent malfunction of the devices caused by freezing of the DEF or deposition of urea.

The DEF system devices keep in operation for some minutes after the engine stops. Before you replace the filter, clean around the DEF pump after the devices stop.

REMARK

You can make sure that the device is stopped with the system operating lamp at the side of the battery disconnect switch. Make sure that the system operating lamp is off, and then start the replacement work.

Items to be prepared

- DEF filter removal tool (3)

1. Open the cover (7) at the front right side of the machine, remove the filler stand (8). You can find the tool.

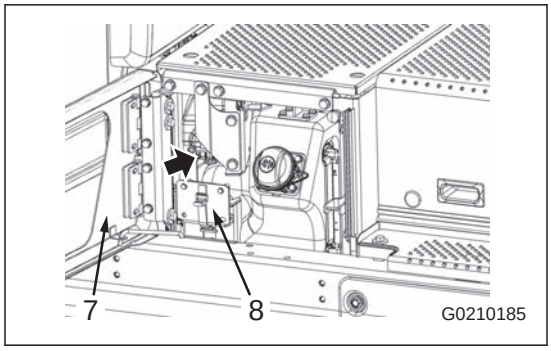

2. Remove the filter cap (1) at the lower part of the DEF pump, and remove the element (2).

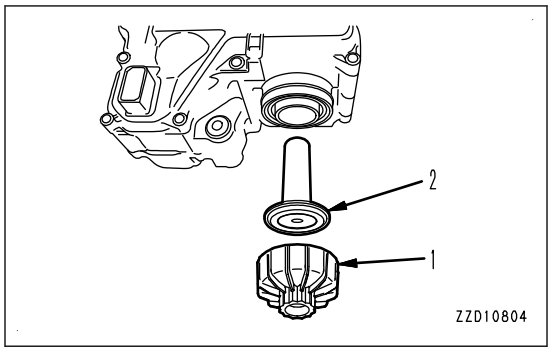

3. Turn the cap (4) of the filter removal tool (3), and remove it.
4. Make sure that the spacer (5) is installed correctly.

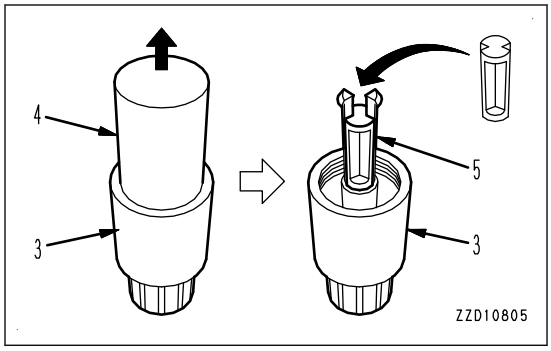

5. Insert the filter removal tool (3) into the lower part of the DEF pump and screw in by hand.

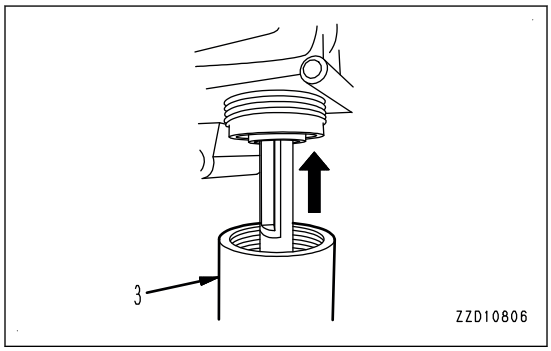

6. Make sure that the filter removal tool (3) is fully inserted to the end.

   Insert the filter removal tool (3) to the end where you cannot thrust it in more.

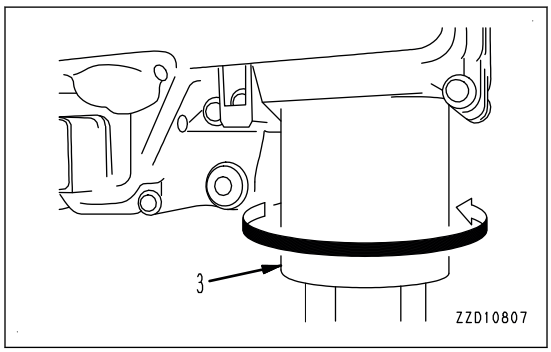

7. Turn the filter removal tool (3) in reverse, and remove the filter (6).

   The filter (6) can be removed together with the filter removal tool (3).

   If you cannot remove the filter (6) from the DEF pump, hold the filter removal tool (3), and then pull it down to remove.

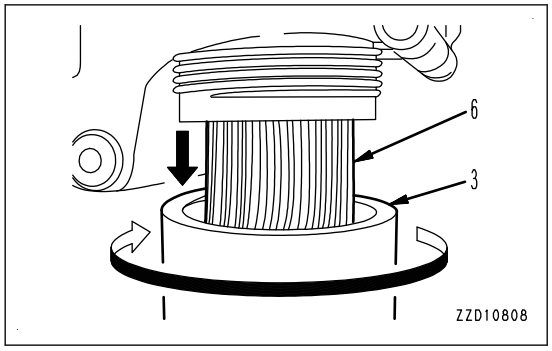

8. Slide the filter (6) down, and remove the spacer (5) from the filter removal tool (3).

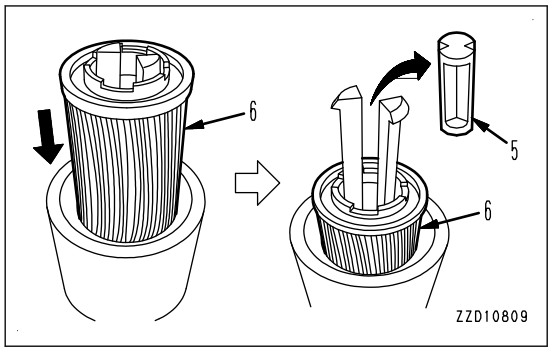

9. Pull the filter (6) up, and remove it while you push in the top of the filter removal tool (3).
10. Put the removed spacer (5) back to the filter removal tool (3), and keep them.
11. Insert a new filter and a new element into the lower part of the DEF pump, and lightly tighten them by hand.

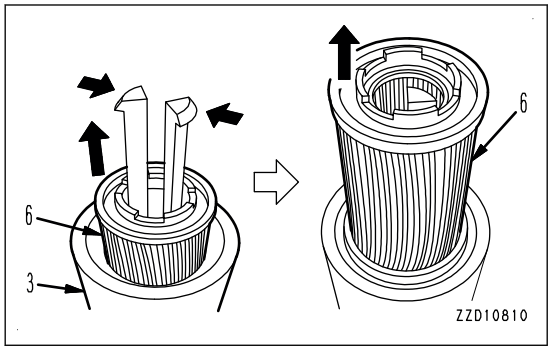

12. Tighten the filter cap (1).

    Tightening torque: 20 to 25 Nm {2.0 to 2.5 kgfm, 14.5 to 18.1 lbft}
13. You can reset the maintenance time on the monitor. For how to reset the maintenance time, see “Maintenance Item Screen Setting (3-91)”.

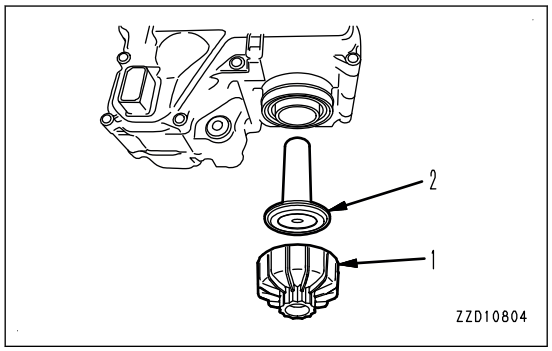

Every 3000 Hours Maintenance

Maintenance for every 100, 250, 500 and 1000 hours service should be performed at the same time.

How to Replace Hydraulic Oil Filter Element

⚠ WARNING

- **Immediately after the engine is stopped, the parts and oil are very hot, and they can cause burn injury. Wait for the temperature to go down, and then start the work.**
- **When you remove the oil filler port cap, there is a possibility that oil spurts out. Slowly turn the oil filler port cap to release the internal pressure, and then remove it carefully.**

NOTICE

When a hydraulic breaker is installed to the machine, the hydraulic oil deteriorates faster than in the normal bucket digging operation. For the maintenance, see "Maintenance Interval for Hydraulic Breaker (4-19)".

Items to be prepared

Container to receive drained oil

1. Lower the work equipment on a hard and level ground in the posture shown in the figure, and stop the engine.

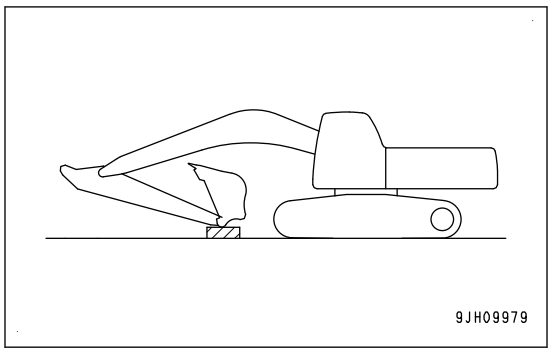

2. Remove the cap of the filler port (F) on the hydraulic tank to release the internal pressure.
3. Loosen the bolts (2 pieces), and remove the cover (1).
4. Remove the bolt (2) that fixes the wiring clamp.

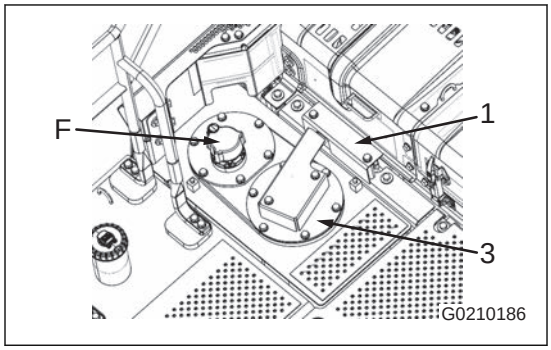

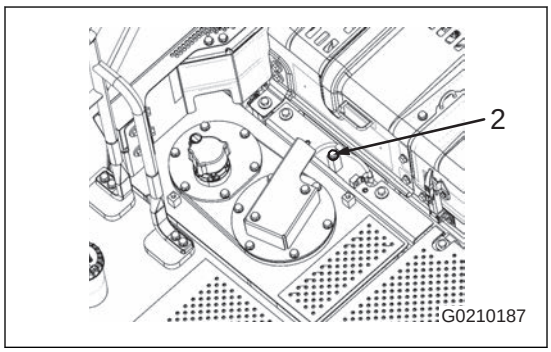

5. Loosen the bolts (6 pieces), and remove the cover assembly (3).

   The cover can jump out by the force of the spring. Remove the bolt while you push and hold the cover down.

REMARK

When the mounting bolts for the cover are loosened and kept as it is for approximately 5 minutes, the internal pressure in the case is released. Accordingly, oil in the element runs out, and no much oil comes out when you remove the element.

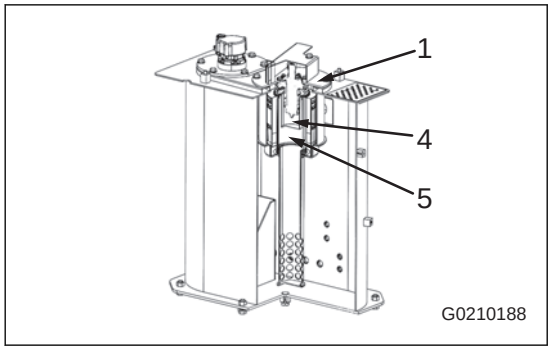

6. Remove the strainer (4), and then remove the element (5).
7. Examine the bottom of the filter case. If dirt or such is found, remove it.

   At this time, be very careful not to let dirt or such fall into the hydraulic tank.
8. Clean the removed parts in flushing oil.
9. Install the new element in the position where the element (5) was installed.
10. Set the strainer (4) at the top of the element.
11. Set the cover assembly (3), and install the cover with the cover mounting bolts while you push it with your hand.
12. Fix the wiring clamp with the bolt (2).
13. Fix the cover (1) with the bolts (2 pieces).
14. Install the oil filler cap.
15. Start the engine, and run it at low idle for 10 minutes to bleed air.
16. Stop the engine.

    REMARK

    Let the machine be as it is for 5 minutes or more, and then start the operation. This will remove the air bubbles in the oil in the tank.
17. Make sure that there is no oil leakage. Wipe off spilled oil.
18. You can reset the maintenance time on the monitor. For how to reset the maintenance time, see “Maintenance Item Screen Setting (3-91)”.

How to Clean Hydraulic Tank Strainer

⚠ WARNING

- **Immediately after the engine is stopped, the parts and oil are very hot, and they can cause burn injury. Wait for the temperature to go down, and then start the work.**
- **When you remove the oil filler port cap, there is a possibility that oil spurts out. Slowly turn the oil filler port cap to release the internal pressure, and then remove it carefully.**

1. Remove the cap of the filler port (F) on the hydraulic tank to release the internal pressure.

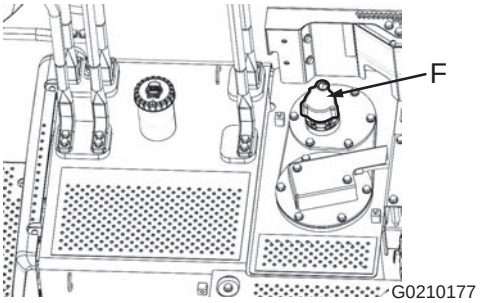

2. Remove the bolts (6 pieces), and remove the cover (1).

   The cover (1) can jump out by the force of the spring (2). Remove the bolts while you push down the cover.
3. Pull up the top of the rod (3), and remove the spring (2) and strainer (4).
4. Remove dirt from the strainer (4), and then clean it in flushing oil. Replace the strainer (4) with a new one if it has damage.
5. Insert the strainer (4) into the protrusion part (5) of the tank to install it.
6. Install the cover (1) with the bolt while the spring (2) is pushed by the protrusion at the bottom of the cover.

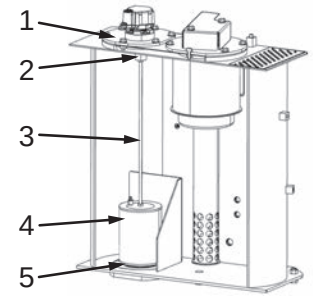

Every 4000 Hours Maintenance

Maintenance for every 100, 250, 500, 1000 and 2000 hours service should be performed at the same time.

How to Examine Water Pump

Check around the water pump for oil leakage and water leakage.
If any problem is found, contact your Komatsu distributor to have the parts disassembled, repaired, or replaced.

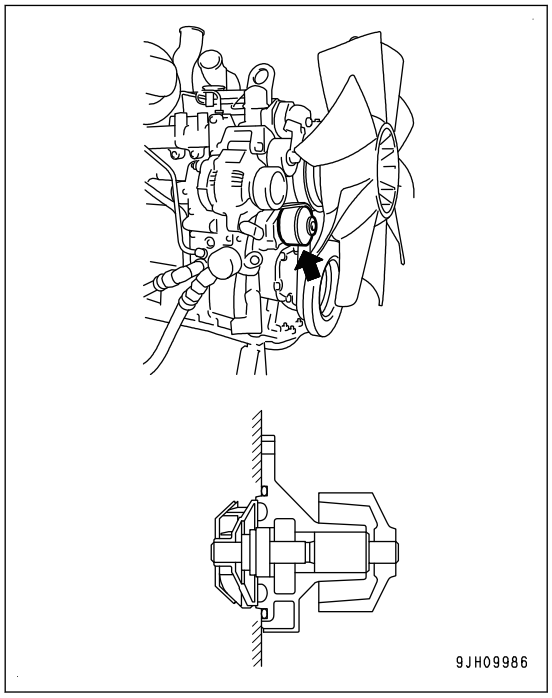

How to Examine Starting Motor

Consult your Komatsu distributor for inspection of the starting motor.

If you start the engine frequently, consult for inspection every 1000 hours.

How to Replace Accumulator (For Control Circuit)

⚠ WARNING

The accumulator is filled with the high-pressure nitrogen gas. If it is not handled correctly, an explosion can occur and it can cause personal injury or death. When you handle it, obey the items that follow.

- **The pressure in the hydraulic circuit cannot be fully released. When you remove the hydraulic equipment, do not stand in the direction that oil spurts out. Loosen the screws slowly.**
- **Do not disassemble it.**
- **Do not let an open flame be near it. Do not throw it in fire.**
- **Do not do the drilling, welding, or flame-cutting.**
- **Do not hit it or roll it or give shocks to it.**
- **When you discard it, the gas must be released. Consult your Komatsu distributor to do this work.**

NOTICE

- **If the nitrogen gas charge pressure in the accumulator is low and operations are continued, it becomes impossible to release the remaining pressure inside the hydraulic circuit if a failure occurs on the machine.**
- **The nitrogen gas charge pressure in the accumulator can decrease in a short time by the environment or the way it is used, and the pressure cannot be accumulated.**
  If the nitrogen gas charge pressure decreases, recharge the nitrogen gas in response to the installed accumulator, or you must replace the accumulator. At that time, consult your Komatsu distributor.

Replace the accumulator every 2 years or every 4000 hours that comes first. Consult your Komatsu distributor for replacement.
The accumulator is installed to the position shown in the figure.

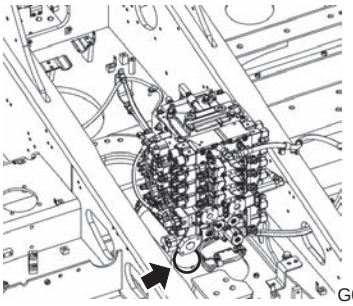

How to Examine Operation of Air Conditioner Compressor

Check the following 2 items.

1) When the air conditioner switch is turned ON-OFF, do the air conditioner compressor and the magnet clutch also turn ON-OFF?
2) Is any abnormal noise generated by the magnet clutch or the air conditioner compressor body?

   If any abnormality is found, ask your Komatsu distributor to have the parts disassembled, repaired, or replaced.

How to Examine for Looseness of Engine High-Pressure Piping Clamp, Hardening of Rubber

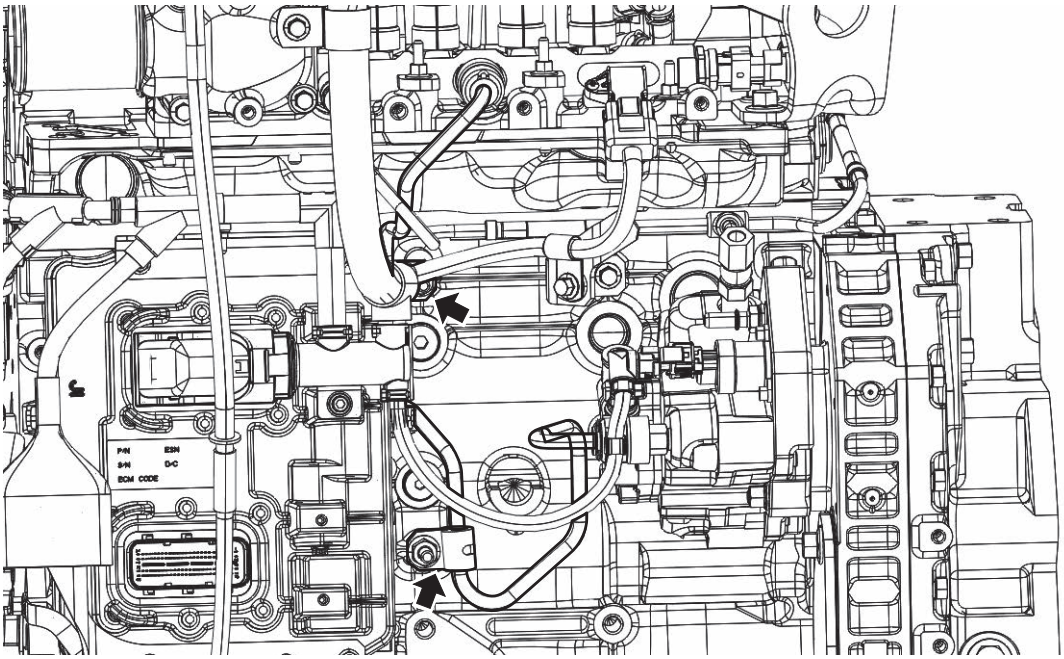

Visually examine or touch with a finger to make sure that the mounting bolts of the high-pressure pipe clamps (2 places) between the supply pump and common rail are tightened without looseness, and the rubber is not hard. When you are required to replace, replace the high-pressure pipe assembly.

If a problem is found, replace it. Consult your Komatsu distributor for replacement.

How to Examine for Missing Fuel Spray Prevention Cap, Hardening of Rubber

The fuel spray prevention caps at the fuel injection pipe and two ends of the high-pressure pipe are protective parts, which prevent leakage and spray of fuel and fire caused by the contact with high-temperature parts of the engine.

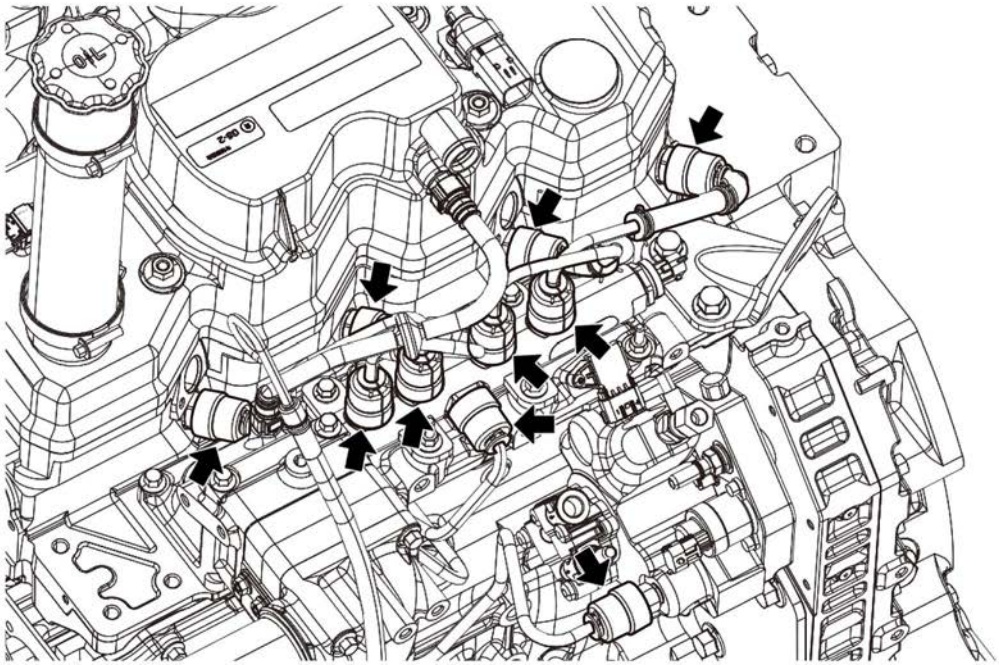

Visually examine or examine with a finger that the fuel spray prevention caps (10 places) do not come off, and the rubbers do not become hard.

If a problem is found, replace it. Consult your Komatsu distributor for replacement.

Replace Expansion Tank Cap

⚠ WARNING

Wait for the temperature to go down, and turn the cap of the expansion tank slowly to release the pressure, and remove the cap carefully. Immediately after the engine is stopped, the coolant is very hot and the pressure is accumulated in the expansion tank. If you remove the cap in this state, it can cause burn injury.

1. Stop the machine on a level ground, and stop the engine.
2. Remove the 4 bolts (1), and remove the cover (2).
3. Make sure that the surface temperature of the expansion tank cap (2) is sufficiently low as you can touch it by bare hand, and turn the expansion tank cap (2) slowly to release the internal pressure.
4. Replace the expansion tank cap (4) with a new one, and tighten it.
5. Install the cover.

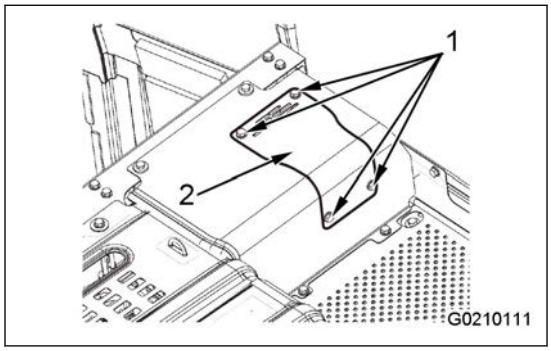

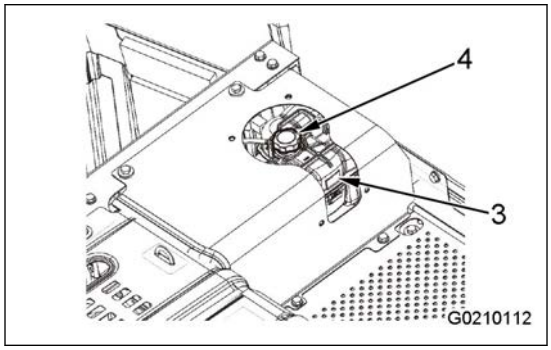

How to Examine Exhaust Pipe Cover

WARNING

Immediately after the engine is stopped, the parts are very hot, and they can cause burn injury. Wait for the temperature to go down, and then start the work.

NOTICE

- **The exhaust pipe cover can have damage by the conditions of use and the operating environment of the machine because its material becomes deteriorated.**
- **If the exhaust pipe cover is not repaired, the exhaust gas temperature in the aftertreatment devices does not increase correctly, and it can cause bad effect on the exhaust gas purification function.**

1. Stop the machine on a level ground, and stop the engine.
2. Open the engine hood.

   For details, see “How to Open and Close Engine Hood (3-293)”.
3. Remove the bolts (1) (2 pieces), and remove the hose (2) from the step (3).
4. Remove the bolts (4) (4 pieces), and remove the step (3).

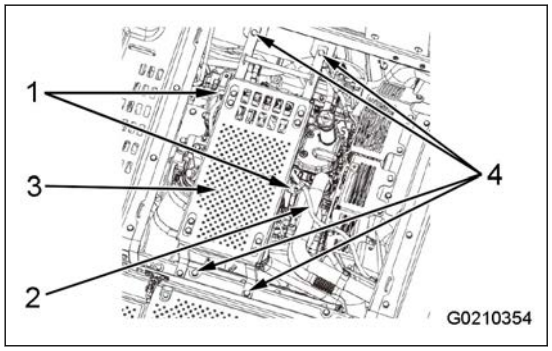

5. Examine the exhaust pipe cover (5).

   The thermal insulation performance is degraded in the cases that follow. Consult your Komatsu distributor for replacement of the exhaust pipe.
   - There is a hole in the exhaust pipe cover.
   - The belt for the exhaust pipe cover has damage, and the cover is removed.
6. Install the step (3) with the bolts (4) (4 pieces).
7. Install the hose (2) to the step (3) with the bolts (1) (2 pieces).
8. Close the engine hood.

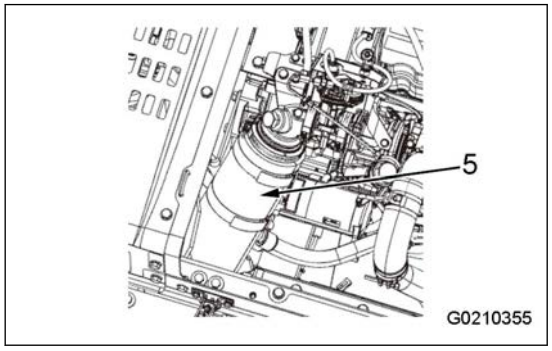

Every 4500 Hours Maintenance

Maintenance for every 100, 250 and 500 hours should be performed at the same time.

How to Clean DEF Tank

Ask your Komatsu distributor for cleaning of the DEF tank.

How to Replace DEF Tank Filler Port Filter

⚠ WARNING

Wait for the temperature of the machine to go down, and then start the work. Immediately after the engine is stopped, all the parts are very hot, and they can cause burn injury.

⚠ CAUTION

- **If the equipment and devices required for the replacement work are not available and you cannot secure the safety, we recommend to consult your Komatsu distributor.**
- **To prevent the unexpected machine movement during the work, make sure that the machine is in the conditions that follow before you start the work.**
  - **The machine is stopped on a level ground.**
  - **The work equipment is lowered to the ground in a stable attitude.**
  - **The lock lever is in the LOCK position.**
  - **The starting switch is in the OFF position and the engine is stopped.**
- **Before you start the work, turn the battery disconnect switch to the OFF position and pull out the key.**
  For the operation of the battery disconnect switch, see “Battery Disconnect Switch (3-169)”.

NOTICE

- **If the filter other than Komatsu genuine parts is used, entry of foreign materials to the DEF pump and DEF injector can occur, and it causes failure of the machine. Komatsu recommends the use of Komatsu genuine parts for replacement parts.**
- **The DEF tank filler port filter cannot be cleaned. The cleaning or regeneration of the filter will degrade the performance of the filter, and it causes damage to the DEF pump. Do not use the filter again.**
- **If the DEF tank filler port filter is not assembled correctly, it can cause DEF leakage. Replace the DEF tank filler port filter in the correct procedure.**
- **DEF freezes at -11 ℃ {12.2 ℉}. If it is frozen, the filter cannot be replaced easily. Replace the filter when the temperature around the DEF tank is higher than -11 ℃ {12.2 ℉} in the condition that the DEF will not freeze.**
- **Before you start the work, clean around the DEF filler port, and be careful not to let dirt go into the tank during the work.**
- **If you cannot add DEF easily because of the clogging in the DEF tank filler port filter, replace the DEF tank filler port filter even when it does not reach a periodic replacement time.**
- **Do not replace the DEF tank filler port filter if the DEF tank is filled with DEF.**
- **Remove the filter slowly because DEF in the DEF tank filler port filter can spill out.**
- **Put on the protective eyeglasses and rubber gloves when you handle the DEF to avoid skin contact.**

Items to be prepared

- Torque wrench
- Distilled water
- Rubber gloves

- Socket (M8)
- Ratchet handle

The DEF tank filler port filter is installed at the position shown in the figure.

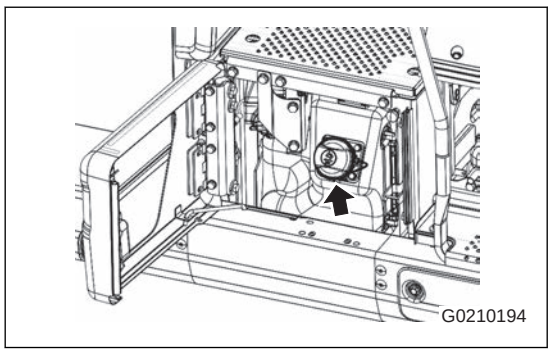

1. Remove the 4 bolts (1), and remove the DEF tank filler port assembly (2).

   Tool to be used: Ratchet handle, socket (M8)

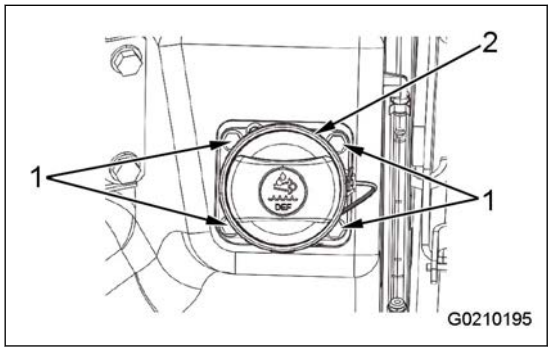

2. Remove the Jubilee clamp (3), and remove the DEF tank filler port filter (4).

   Tool to be used: Ratchet handle, socket (M8)

3. Install the new DEF tank filler port filter (4) to the DEF tank filler port assembly (2) as follows.

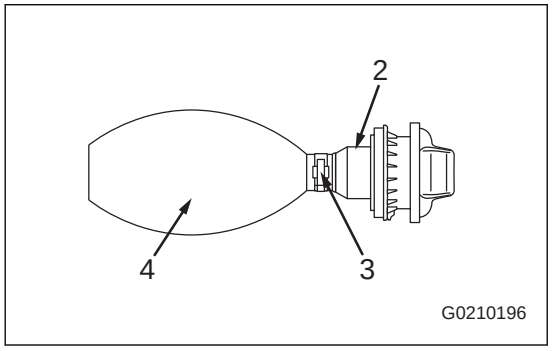

   1) Align the DEF tank filler port filter (4) with the groove (b) of the DEF tank filler port assembly, and tighten the Jubilee clamp (3).

      Tool to be used: Ratchet handle, socket (M8), torque wrench

      Tightening torque: 3.91 to 4.89 Nm {0.4 to 0.5 kgfm, 2.89 to 3.62 lbft}

      NOTICE

      Insertion depth (a) of DEF tank filler port filter (4): 28 mm {1.1 in}

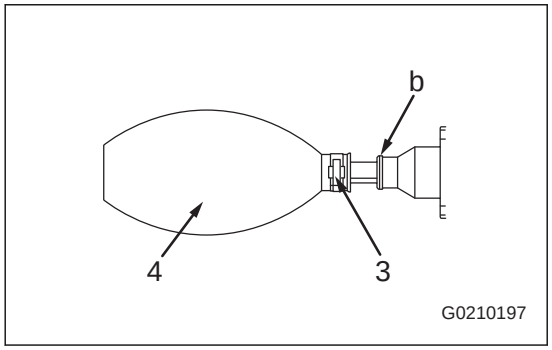

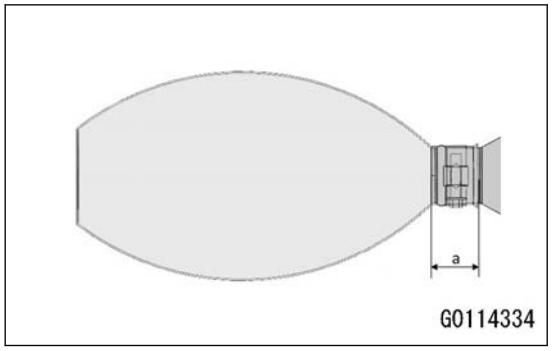

4. Remove the O-ring (6) of the DEF tank (5), and replace it with a new one.

   Apply the distilled water as a lubricant to the new O-ring.

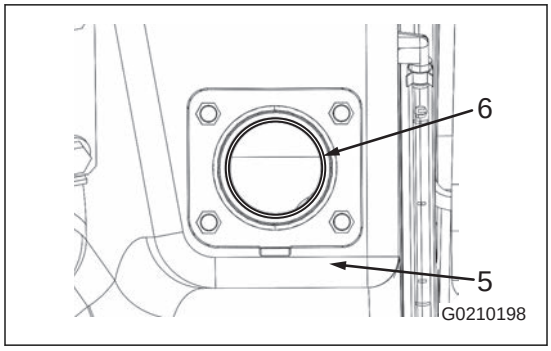

5. Set the DEF tank filler port assembly (2) to the installation position.

   REMARK

   Install it carefully not to let the O-ring (6) get caught.

   NOTICE

   Set the DEF tank filler port assembly (2) to the installation position, and install it straight not to let the O-ring (6) fall off or twist.

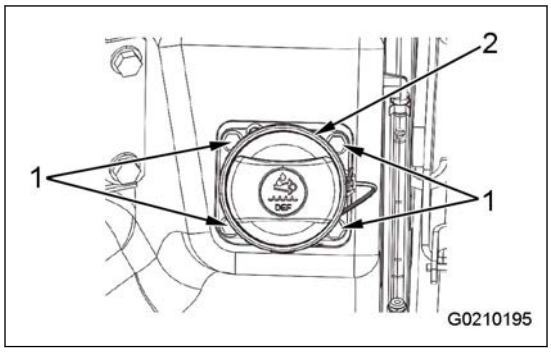

Every 6000 Hours Maintenance

Maintenance for every 100, 250, 500, 1000, 2000 and 3000 hours service should be performed at the same time.

How to Change Oil in Hydraulic Tank

⚠ WARNING

- **Immediately after the engine is stopped, the parts and oil are very hot, and they can cause burn injury. Wait for the temperature to go down, and then start the work.**
- **When you remove the oil filler port cap, there is a possibility that oil spurts out. Slowly turn the oil filler port cap to release the internal pressure, and then remove it carefully.**

NOTICE

When a hydraulic breaker is installed to the machine, the hydraulic oil deteriorates faster than in the normal bucket digging operation. For the maintenance, see "Maintenance Interval for Hydraulic Breaker (4-19)".

Refill capacity: 119 ℓ {31.4 US gal}

Items to be prepared

- Container to receive drained oil
- Socket wrench handle

1. Swing the upper structure to let the drain plug (P) at the bottom of the suction tube come at the center between the right and left tracks.
2. Retract the arm and bucket cylinder, lower the boom, and lower the tooth to the ground.

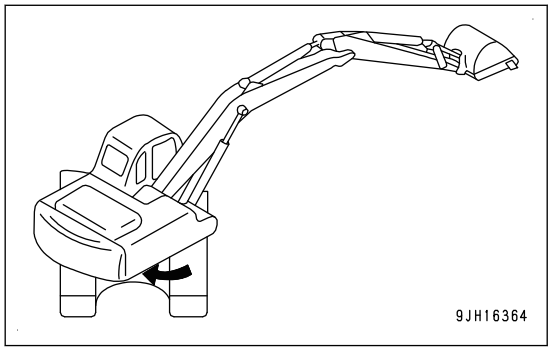

3. Operate the operating part (g) of the lock lever to set it to the LOCK position (L), and stop the engine.

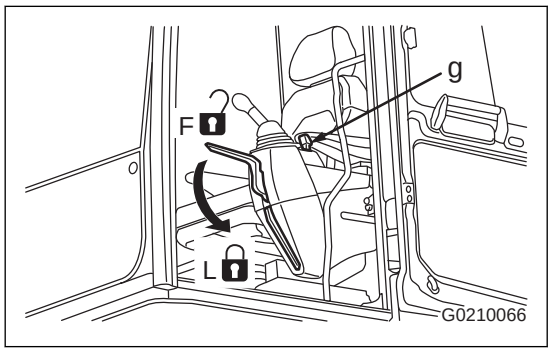

4. Remove the cap of the filler port (F).
5. Remove the undercover (1).
6. Put a container to receive drained oil below the drain plug (P) at the bottom of the suction tube.

   When you remove the drain plug (P), be careful not to get oil on yourself.
7. Remove the drain plug (P), and drain oil.

   Examine the installed O-ring for damage. If it has damage, replace the O-ring.
8. After the oil is drained, tighten the drain plug (P).

   Tightening torque: 58.8 to 78.4 Nm {6 to 8 kgfm, 43.4 to 57.9 lbft}
9. Add oil by the refill capacity through the filler port (F).
10. Make sure that the oil level is between marks H and L on the sight gauge (G).

    For the applicable oil, see “How to Use Fuel, Coolant and Lubricants by Ambient Temperature (7-10)”.

    For the procedure to examine the oil level, see “How to Examine Oil Level in Hydraulic Tank, Add Oil (3-205)”.
11. Bleed air from the hydraulic circuit.

    For the procedure to bleed air from the hydraulic circuit, see “How to Bleed Air from Hydraulic System (4-47)”.
12. Install the undercover (1).
13. You can reset the maintenance time on the monitor. For how to reset the maintenance time, see “Maintenance Item Screen Setting (3-91)”.

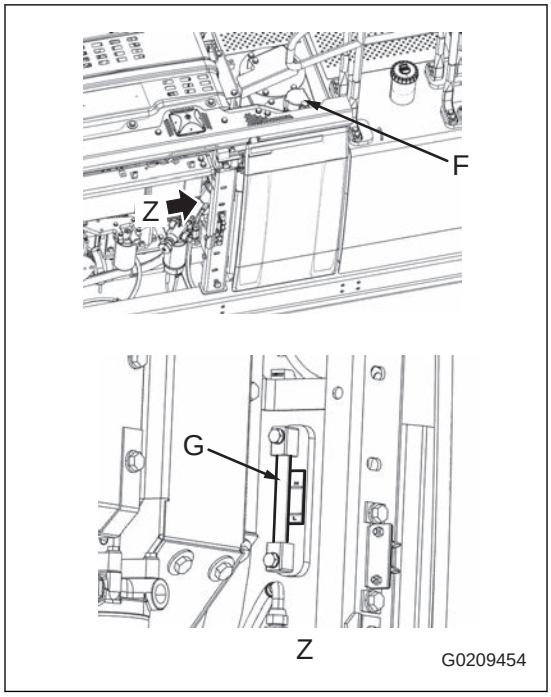

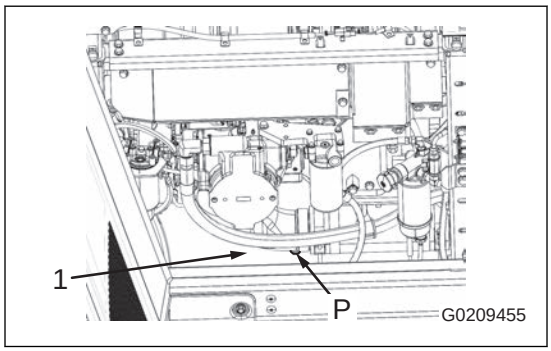

Every 8000 Hours Maintenance

Maintenance for every 100, 250, 500, 1000, 2000 and 4000 hours service should be performed at the same time.

How to Replace Fuel Spray Prevention Cap

Ask your Komatsu distributor for replacement of the fuel spray prevention caps.

How to Clean KDPF

Contact your Komatsu distributor for cleaning of the KDPF.

Every 9000 Hours Maintenance

Maintenance for every 100, 250, 500, 1000, 2000, 3000 and 4500 hours service should be performed at the same time.

How to Replace DEF Hose

Ask your Komatsu distributor for replacement of the DEF hose.

Every 6 Months Maintenance

How to Examine Anchor Point for Tie-off

1. Clean the anchor point for tie-off to examine it easily.

   The anchor points for tie-off are supplied on the boom at 2 places (right and left) (1) and at the rear side (2) of the cab.

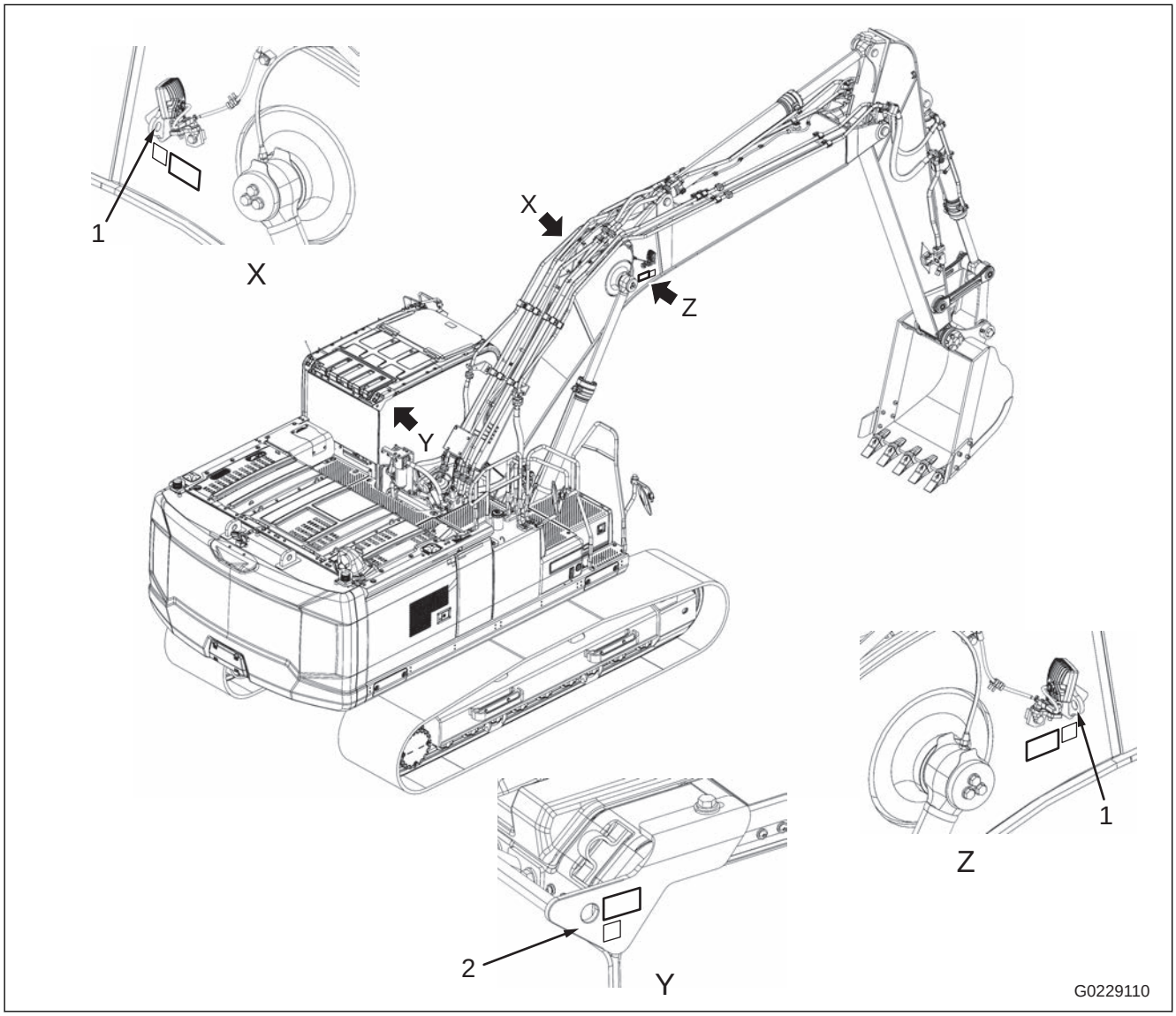

2. Visually examine the anchor point for tie-off and its mounting part for cracks, deformation, and deterioration.

   If a problem is found, consult your Komatsu distributor for repair.

Specifications

Specifications

Specifications: PC220LC-12

	Item		Unit	PC220LC-12
	Operating weight		kg {lb}	24500 {54022.5}
	Bucket capacity		m^3 {cu/yd}	0.8 {1.05}
	Engine model		-	Komatsu SAA4D107E-5 diesel engine
	Rated horse-power	SAE J1995 (gross)	kW {HP} / min^{-1} {rpm}	129 {173} / 2000 {2000}
		ISO 9249/SAE J1349 (net)		129 {172} / 2000 {2000}
	Battery (*1)		-	12 V, 136 Ah × 2 pieces
A	Overall length		mm {ft in}	9560 {31 ' 4 "}
B	Overall height (work equipment)		mm {ft in}	2995 {9 ' 10 "}
C	Overall width		mm {ft in}	2810 {9 ' 3 "}
D	Shoe width		mm {ft in}	600 {2 ' 0 "}
E	Cab height		mm {ft in}	3060 {10 ' 0 "}
F	Tail swing radius		mm {ft in}	2900 {9 ' 6 "}
G	Overall length of track		mm {ft in}	4070 {13 ' 4 "}
H	Distance between tumbler centers		mm {ft in}	3275 {10 ' 9 "}
I	Height of handrail		mm {ft in}	3000 {9 ' 10 "}
J	Maximum width of undercarriage		mm {ft in}	2980 {9 ' 9 "}
	Min. ground clearance		mm {ft in}	440 {1 ' 5 "}
	Travel speed (Lo/Mi/Hi)		km/h {MPH}	3.0/4.1/5.5 {1.9/2.5/3.4}
	Swing speed		min^{-1} {rpm}	12.4 {12.4}

*1: The battery capacity (Ah) shows the 5-hour rate capacity.

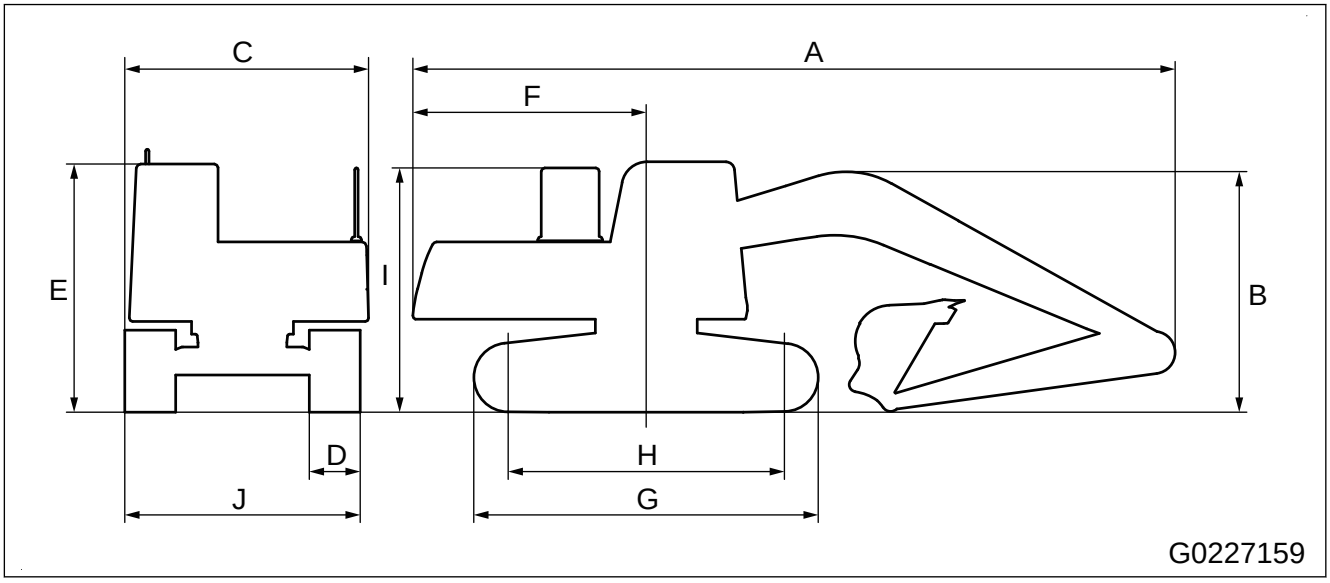

	Working ranges	Unit	PC220LC-12
A	Max. digging reach	mm {ft in}	9875 {32 ' 5 "}
B	Max. digging depth	mm {ft in}	6620 {21 ' 9 "}
C	Max. digging height	mm {ft in}	10000 {32 ' 10 "}
D	Max. vertical wall digging depth	mm {ft in}	5980 {19 ' 7 "}
E	Max. dumping height	mm {ft in}	7110 {23 ' 4 "}
F	Min. dumping height	mm {ft in}	2645 {8 ' 8 "}
G	Max. reach at ground level	mm {ft in}	9700 {31 ' 10 "}

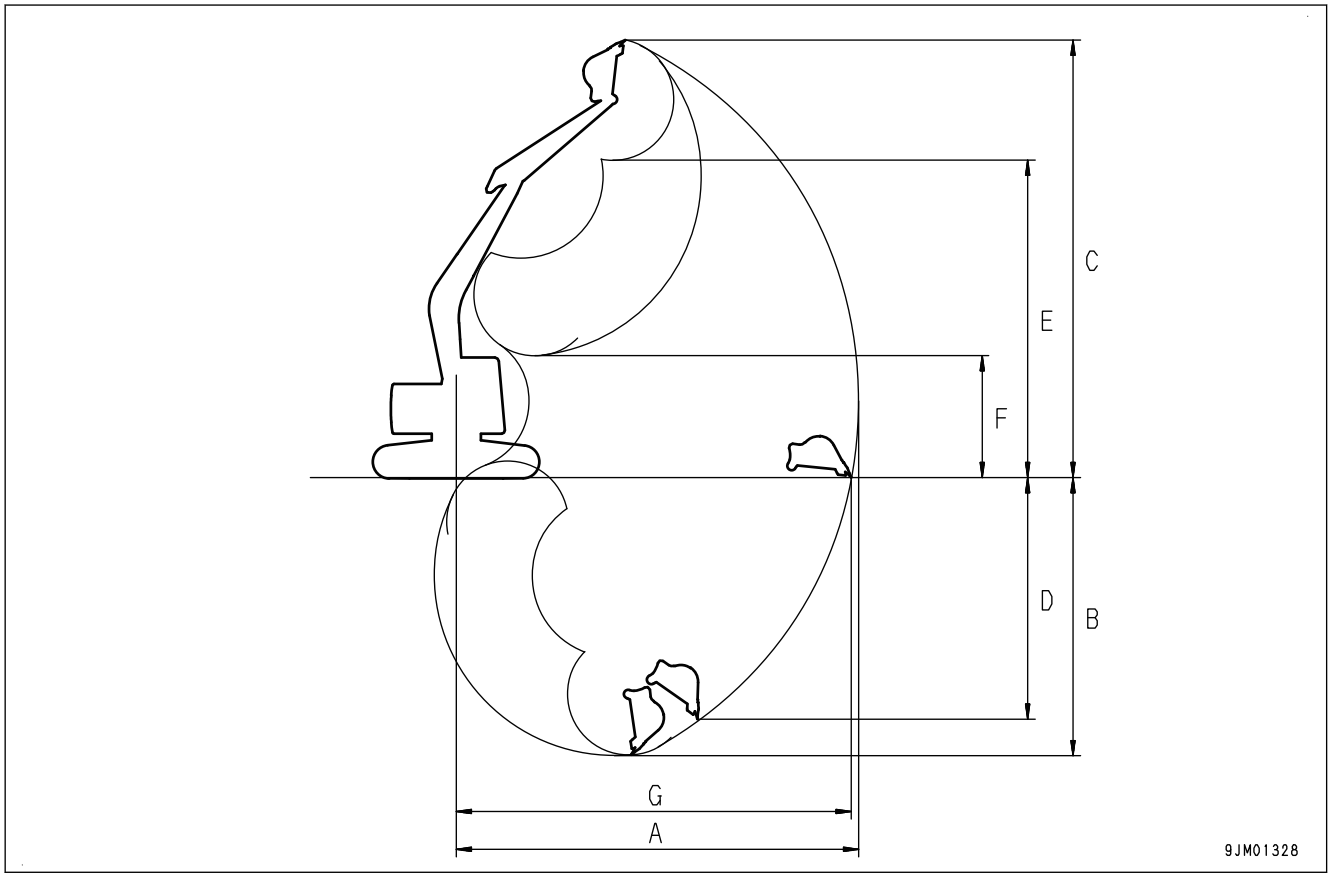

Specifications: PC220LCI-12

	Item		Unit	PC220LCI-12
	Operating weight		kg {lb}	24500 {54022.5}
	Bucket capacity		m^3 {cu/yd}	0.8 {1.05}
	Engine model		-	Komatsu SAA4D107E-5 diesel engine
	Rated horse-power	SAE J1995 (gross)	kW {HP} / min^{-1} {rpm}	129 {173} / 2000 {2000}
		ISO 9249/SAE J1349 (net)		129 {172} / 2000 {2000}
	Battery (*1)		-	12 V, 136 Ah × 2 pieces
A	Overall length		mm {ft in}	9560 {31 ' 4 "}
B	Overall height (work equipment)		mm {ft in}	2995 {9 ' 10 "}
C	Overall width		mm {ft in}	2810 {9 ' 3 "}
D	Shoe width		mm {ft in}	700 {2 ' 4 "}
E	Cab height		mm {ft in}	3060 {10 ' 0 "}
F	Tail swing radius		mm {ft in}	2900 {9 ' 6 "}
G	Overall length of track		mm {ft in}	4450 {14 ' 7 "}
H	Distance between tumbler centers		mm {ft in}	3655 {12 ' 0 "}
I	Height of handrail		mm {ft in}	3000 {9 ' 10 "}
J	Maximum width of undercarriage		mm {ft in}	2980 {9 ' 9 "}
	Min. ground clearance		mm {ft in}	440 {1 ' 5 "}
	Travel speed (Lo/Mi/Hi)		km/h {MPH}	3.0/4.1/5.5 {1.9/2.5/3.4}
	Swing speed		min^{-1} {rpm}	12.4 {12.4}

*1: The battery capacity (Ah) shows the 5-hour rate capacity.

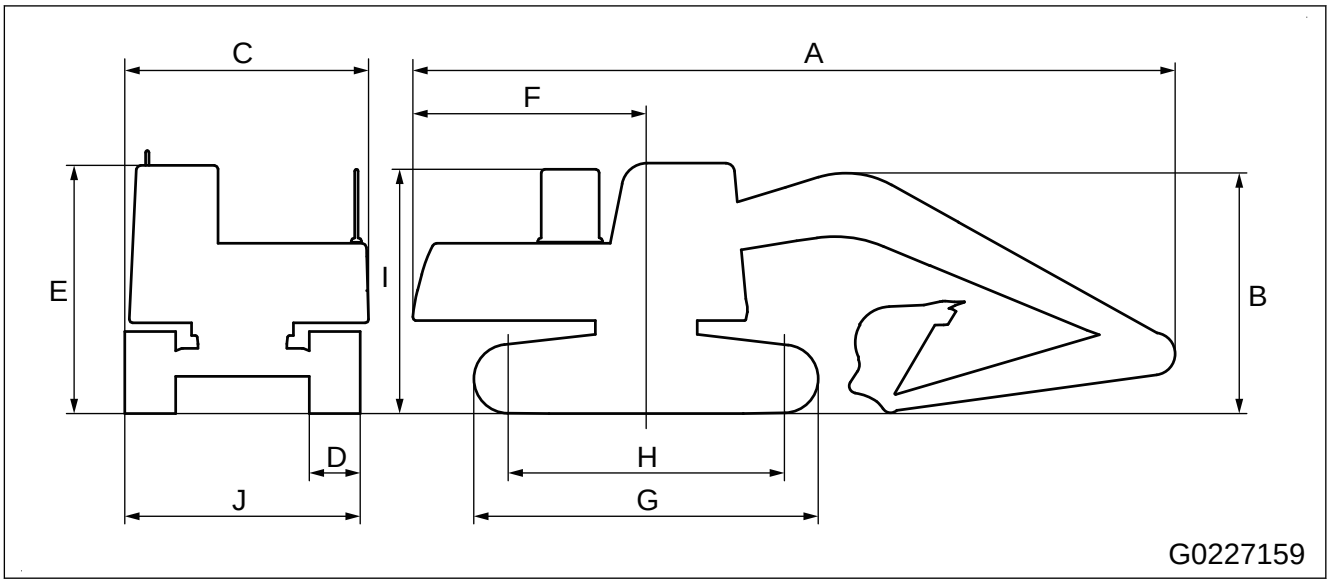

	Working ranges	Unit	PC220LCI-12
A	Max. digging reach	mm {ft in}	9875 {32 ' 5 "}
B	Max. digging depth	mm {ft in}	6620 {21 ' 9 "}
C	Max. digging height	mm {ft in}	10000 {32 ' 10 "}
D	Max. vertical wall digging depth	mm {ft in}	5980 {19 ' 7 "}
E	Max. dumping height	mm {ft in}	7110 {23 ' 4 "}
F	Min. dumping height	mm {ft in}	2645 {8 ' 8 "}
G	Max. reach at ground level	mm {ft in}	9700 {31 ' 10 "}

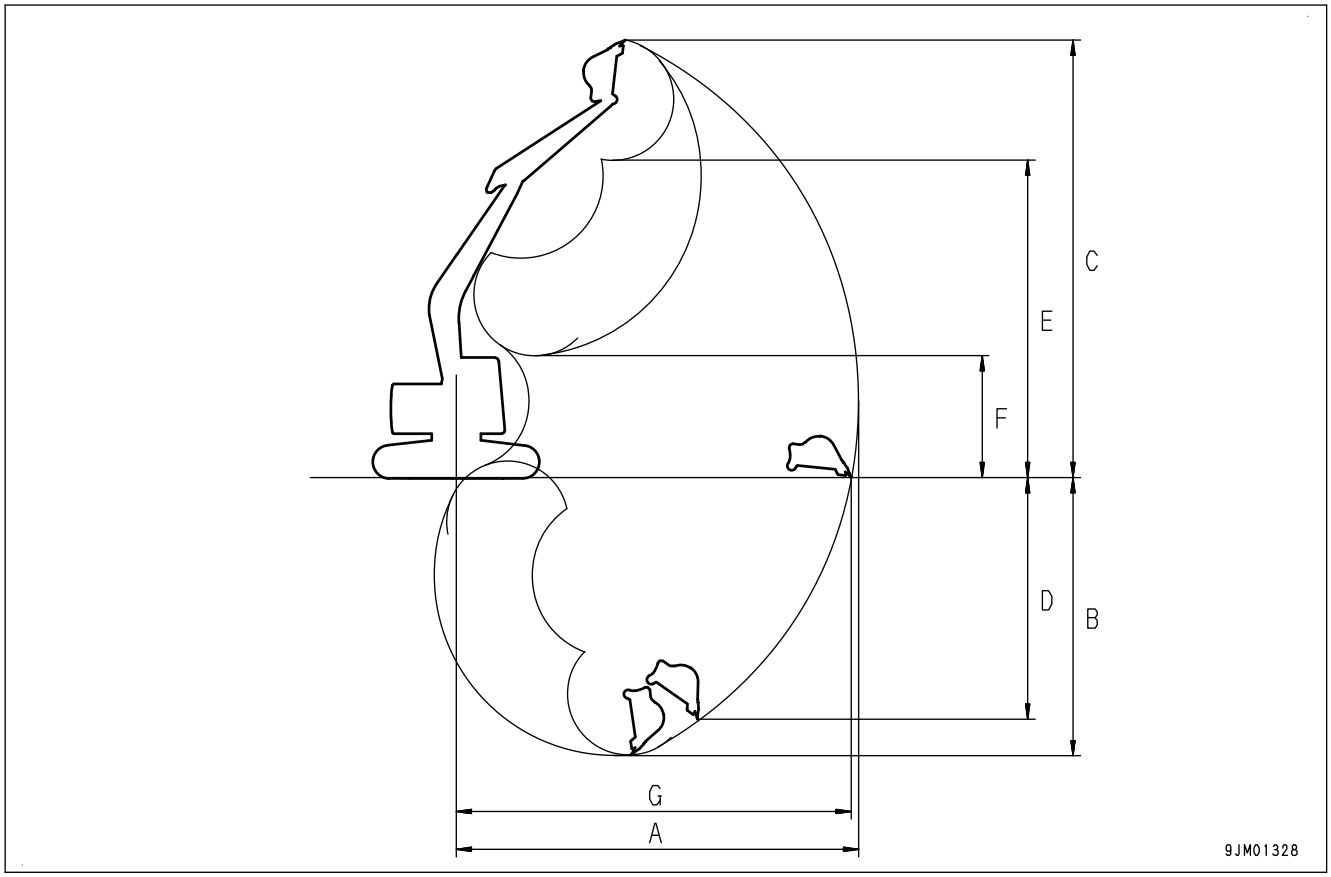

Attachments and Options

⚠ WARNING

Please read and make sure that you understand the SAFETY section before reading this section.

Precautions When You Use Attachments and Options Safely

⚠ WARNING

Do not install attachments or optional devices other than those authorized by us. We will not be responsible for personal injury, damage, or property damage related to attachments or optional devices other than those authorized by us.

When you install the attachments or options to the machine, safety precautions are necessary. Obey the precautions below when you select, install or remove, or use the attachments or options.

Caution When You Select

When you install attachments and optional equipment, you must be careful about the precautions that follow. Before that, consult your Komatsu distributor.

- By the type of the attachments or options, it can be necessary to install a front guard, overhead guard, or other safety structure to the machine.
- By the type of the attachments or options, the work equipment and the machine body possibly interfere with each other.

Read the Operation and Maintenance Manual fully

Before you install/remove or use the attachments or options, make sure that you fully read and understand the instruction manuals of the attachment or option and the Operation and Maintenance Manual of the machine.

If you lose the instruction manual or it has damage, get a new one from the manufacturer of the attachments or options, or your Komatsu distributor.

⚠ WARNING

General precautions

- **For the attachment that makes hitting sound, it cannot be easy to communicate the work instructions between workers. Give a signalman in the jobsite first and find the signals to be used.**
- **Do not swing the work equipment sideway with a heavy load on it. It will be more dangerous on a slope.**
- **If a breaker is installed to the machine, the machine is less balanced because a load larger than the bucket is applied to the front of the work equipment. To avoid the danger of fall-off, do not do the work sideway.**
- **If an attachment is installed, the swing range and the center of gravity of the machine change, and the machine moves unexpectedly. Be sure to examine the condition of the machine.**
- **Before you start the work, make fences around the machine to prevent entry of person to the work area.**
  Also, when there is a person near the machine, do not move the machine.
- **To prevent an accident caused by operation error, you must not put your foot on the pedal other than when you operate the pedal.**

Precautions for removal and installation

When you remove and install the attachments or options, obey the precautions below, and be careful of the safety.

- **Do the work on a level and solid ground.**
- **When the operation is done by 2 or more persons, set a leader and obey his/her instructions.**
- **Use applicable devices such as a crane when you handle heavy objects that can cause death, personal injury, or other accidents.**
- **Before you remove a heavy object, use a support to prevent fall-off as necessary. Be careful of the balance of the machine after the heavy object was removed. When you lift a load with a crane, be very careful of the center of gravity.**
- **Do not do the operations while you keep the object lifted by a crane. Be sure to use a stand to prevent fall-off.**
- **Before the installation or after the removal, make the attachment or option be in a stable condition not to fall over.**
- **Do not go below the object which is lifted by a crane. Be sure to stay in a safe area where there is no danger even if the lifted object falls.**
- **Before you install or remove the attachment or before the maintenance, stop the engine, and release the remaining pressure.**

NOTICE

Qualifications are required to operate a crane. Only a qualified operator can operate.
For details about the removal and installation operations, consult your Komatsu distributor.

Precautions When Attachment is Installed

⚠ WARNING

If a long or heavy work equipment is installed, the machine is less stable, and it can lose balance and fall over when it travels down a steep slope or when it swings on a slope.
Do not do the operations that follows. They are very dangerous.

- **Travel down a slope with work equipment raised**
- **Travel across a slope**
- **Swing operation on a slope**
- **If a heavy work equipment is installed, the swing overrun (the distance that the work equipment swings until it fully stops after you stopped the swing operation) will be larger. There is a possibility that you cannot judge the distance correctly and hit the work equipment. Operate while you keep the safe distance from the position where the swing operation is stopped. In addition, the hydraulic drift (the phenomenon that the work equipment lowers gradually by its own weight when it is held in air) increases. When you stop the work equipment in the air, be careful of the hydraulic drift.**
- **To select the boom or arm, consult your Komatsu distributor. If you do not obey the correct work procedure, it can cause dangerous damage.**
- **If a long work equipment is installed, there is a danger that you cannot judge the distance correctly and hit the work equipment as the working range increases largely.**
  Always keep a safe distance from obstacles around the machine.

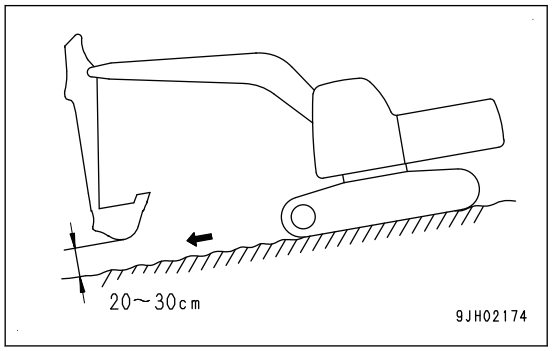

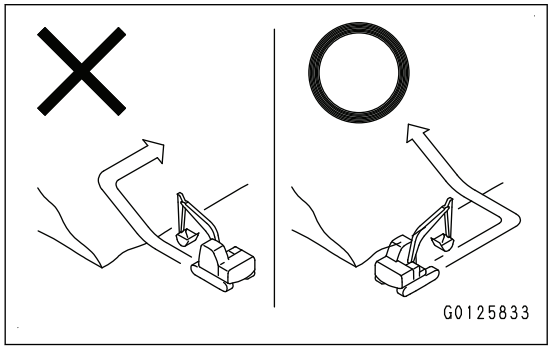

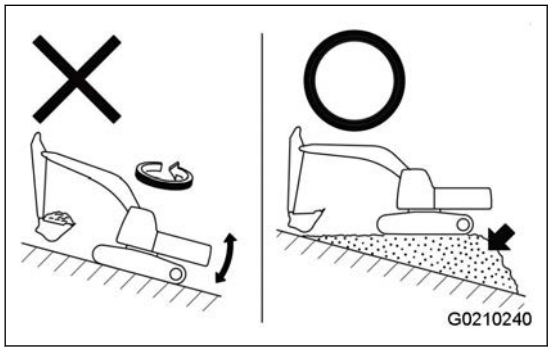

Handle Quick Coupler

⚠ WARNING

There is a danger when you handle the quick coupler. If you do not handle it carefully, it can cause personal injury or death. Obey the items that follow.

- **Use a quick coupler that lets the operator make sure from the operator's position that the attachment and the bucket are fully locked.**
- **Use only quick couplers that have a pilot-operated check valve on the lock cylinder. This is to prevent the danger that the bucket or the attachment can move if hydraulic pressure is lost. If you have any questions, consult your quick coupler manufacturer.**
- **Read the Operation and Maintenance Manual of the quick coupler carefully, and obey its recommendations. If you are not sure how to install or operate it, consult your Komatsu distributor.**
- **The pressure adjustment valves (5) and (6) can limit the installation pressure and the release pressure of the quick coupler, as the quick coupler manufacturer recommends.**
  Maximum circuit pressure: 34.3 MPa {350 kgf/cm^2, 4980 PSI}
- **Be sure to install the quick coupler by qualified personnel. If you have a question, consult your Komatsu distributor.**
- **After you install the hydraulic quick coupler, make sure that the setting of the machine control system is correct before you use it for the first time. Consult your Komatsu distributor.**

NOTICE

After you install the quick coupler, be sure to input the dimensions and weight of the quick coupler correctly. If there is a defective setting, a function such as semi-auto mode cannot operate correctly. For details, see "Shape Setting of Quick Coupler (6-8)".

Quick Coupler Equipment Name

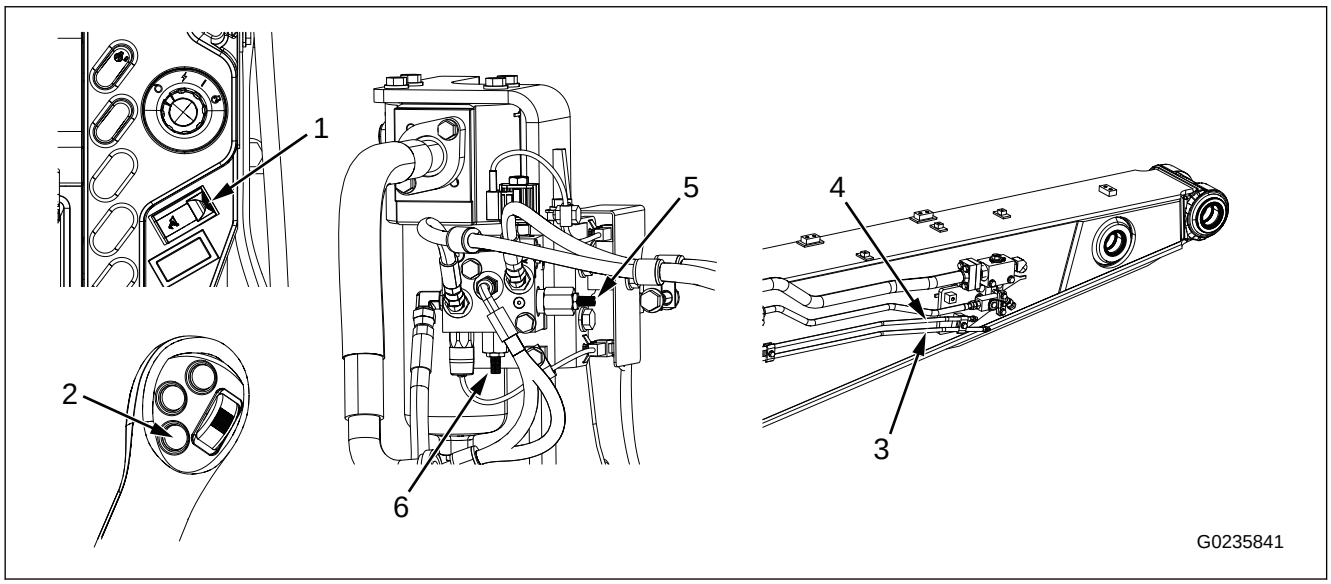

(1) Quick coupler main switch
(2) Quick coupler operation switch
(3) Piping (quick coupler lock direction)
(4) Piping (quick coupler release direction)
(5) Pressure adjustment valve (installation)
(6) Pressure adjustment valve (release)

Quick Coupler Setting

You can set the quick coupler.

For details of the quick coupler, see “Handle Quick Coupler (6-5)”.

Installation Setting

1. Tap “Quick Coupler Setting” (1).

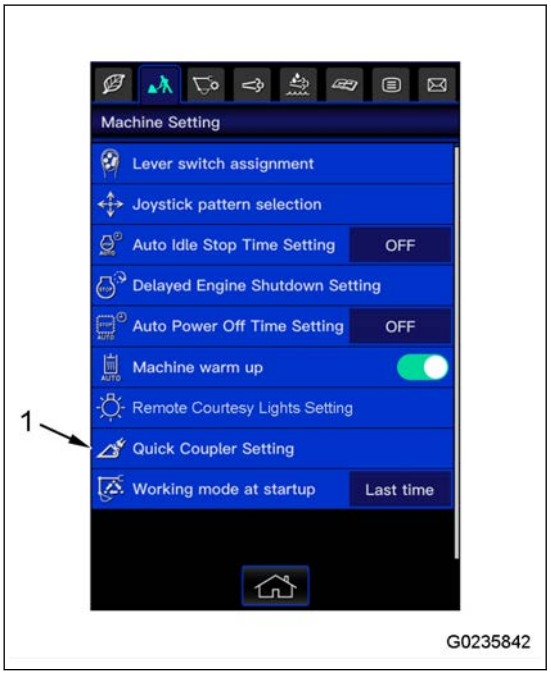

2. Tap “Installation Setting” (2).

   REMARK

   If the usage limit of the attachment setting is set by the supervisor setting and you log on with an ID other than the supervisor, the supervisor setting passcode is required. For the supervisor setting, see “Supervisor Setting (3-110)”.

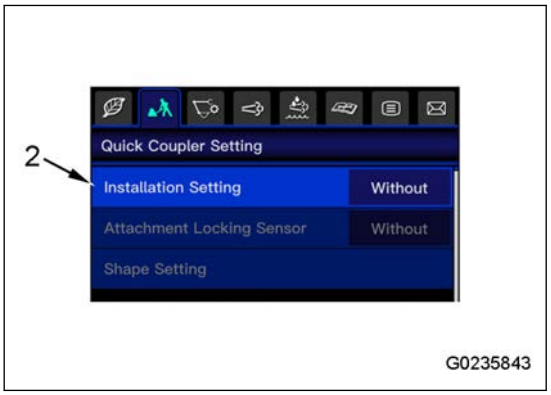

3. Select the type of quick coupler to be installed.

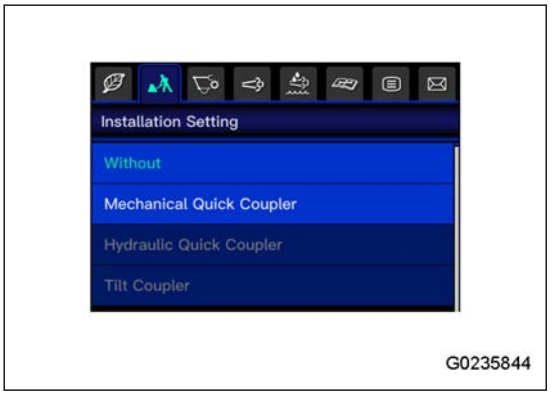

REMARK

- Mechanical Quick Coupler is a quick coupler that does not use oil pressure to remove or install the attachment.
- Hydraulic Quick Coupler is a quick coupler that uses oil pressure to remove and install the attachment.
- Tilt Coupler is a coupler that can rotate the attachment to be installed to the left and right relative to the work equipment.
  Guidance and machine control using IMU sensor can be used only for machines with 3D machine guidance or 3D machine control specification.
- When “Mechanical Quick Coupler” or “Without” is set, the hydraulic system of the quick coupler cannot be activated.
- If the machine is not a quick coupler specification machine, it can only be set to “Mechanical Quick Coupler” or “Without”.

Set Attachment Locking Sensor

When the quick coupler which can be used on the attachment lock system is installed, the lock state of the quick coupler and the engaged state with the attachment can be shown on the monitor by the setting on the monitor.

For details of the attachment lock system, see “Attachment Lock System (6-12)”.

1. Tap “Attachment Locking Sensor” (3).

2. Set whether or not the sensor is installed. When the attachment locking sensor is installed on the main unit of the quick coupler, the attachment lock system is activated if “With” is set. Select the setting for the installed attachment's manufacturer.

REMARK

- Quick couplers with a voltage-type sensor made by Lehnhoff and quick couplers with a sensor made by Rototilt can be used on the attachment lock system.
- When the attachment locking sensor is not installed on the main unit of the quick coupler, or the quick coupler made by the manufacturer that cannot be used on the attachment lock system is installed, an error is shown if “With” is set.
- If you are not sure whether it can be used on the attachment lock system, consult the seller of the quick coupler or your Komatsu distributor.
- Quick couplers with a sensor made by Rototilt must be installed with the tiltrotator made by Rototilt and system that are compatible with this machine.

Shape Setting of Quick Coupler

NOTICE

When you install an attachment with a different distance between pins below the quick coupler, measure the D dimension for the quick coupler and the Ltc4 dimension for the tilt coupler again, and you must input the values.

1. Tap “Shape Setting” (4).
2. Measure the dimensions to input the shape information of the quick coupler.
3. Tap the dimension and weight input fields. Input the dimension or weight on Numeric Input screen. Tap “OK” button.

   Examine the input numeric value. If there is no problem, tap the checkmark button.

G0235847

- When Mechanical Quick Coupler or Hydraulic Quick Coupler is selected

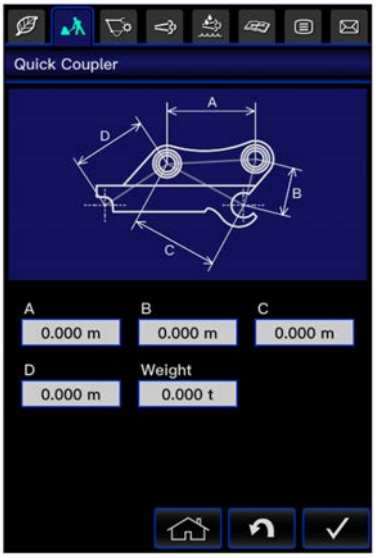

G0235848

- When Tilt Coupler is selected

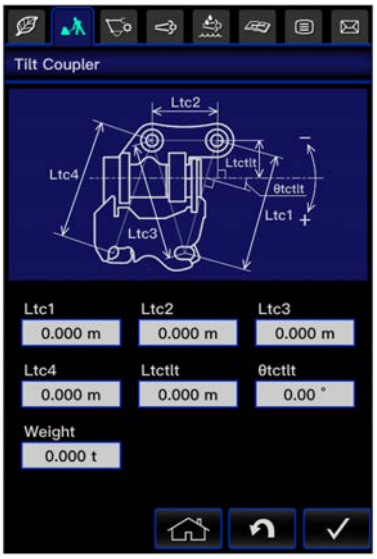

G0235849

To Release a Bucket or Attachment

⚠ WARNING

- **If you handle the oil pressure in the system incorrectly, it can cause personal injury. Do the work in response to the procedure in “How to Remove and Install Attachment (6-25)”.**
- **Before you start the work, make sure that the quick coupler main switch (1) is at the OFF position (A).**

1. If the bucket or attachment is connected to the machine hydraulically, disconnect it before you start the work.
2. If the hydraulic hoses are connected between the bucket or attachment and work equipment, remove the hoses first before you remove the bucket or attachment from the work equipment.
3. Set the installation setting of the quick coupler setting to “Hydraulic Quick Coupler” or “Tilt Coupler” in response to the type of the quick coupler connected to the machine.
   For the setting of the quick coupler, see “Quick Coupler Setting (6-6)”.
4. When you remove the tiltrotator, remove the attachment attached to the bottom of the tiltrotator first.
5. Set the quick coupler main switch (1) to the ON position (B).

   NOTICE

   The quick coupler operation switch (2) also operates only when it is pushed.

   REMARK

   The safety lock mechanism is installed on the switch to prevent the accidental operation. Slide the lock to your side and swing the switch. The lamp on the switch comes on and the alarm buzzer operates.

   OFF position (A)

   The quick coupler operation is disabled.
   The bucket or attachment is locked.

   ON position (B)

   The quick coupler operation is enabled.
   The bucket or attachment will be ready to be operated to the release side.

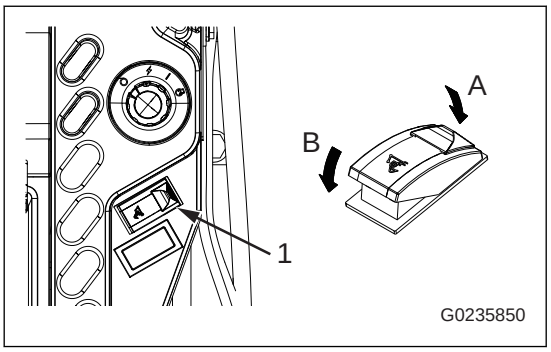

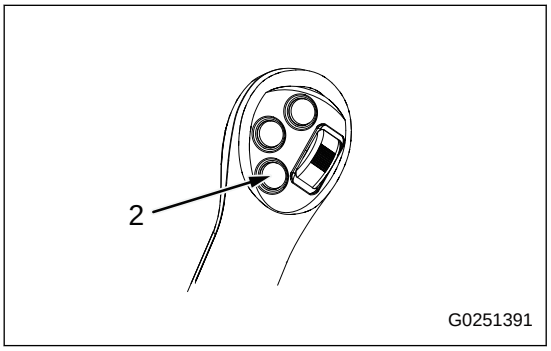

6. Push and hold the quick coupler control switch (2) on the left work equipment control lever to operate the bucket or attachment from the quick coupler to the release side.

   REMARK

   When you set the quick coupler main switch (1) to the ON position (B), the caution lamp (3) on the monitor comes on.

   In some designs of the quick coupler, one of the hydraulic functions of the machine (bucket, boom, arm, or swing) must be activated to increase the pressure in the hydraulic system. To use the swing function, set the swing lock switch to ON. For details, see “Swing Lock Switch (3-136)”.
   The attachment or bucket can now be removed from the quick coupler.
   When the quick coupler main switch (1) is set to the ON position (B), the temporary control cancel function becomes disabled.

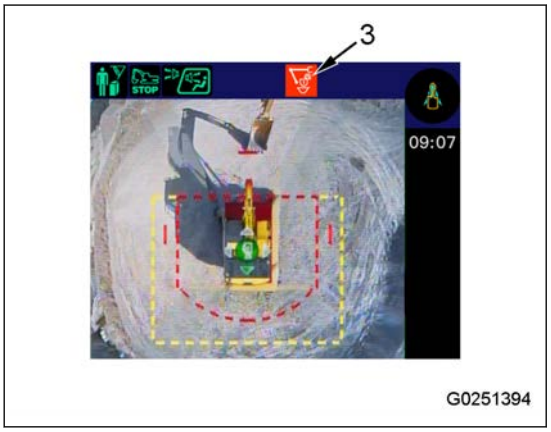

REMARK

If the oil pressure in the quick coupler system decreases during the operation, the alarm buzzer operates intermittently.

Action level “L03” is shown. The quick coupler caution lamp is shown on the monitor.
Stop the machine immediately, and consult your Komatsu distributor for inspection and maintenance.

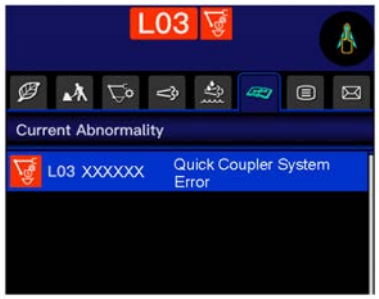

G0235888

To Pick Up a New Bucket or Attachment

WARNING

- **Examine the hoses and fittings of the quick coupler piping system daily to make sure that they are in good condition. Especially, the hoses and fittings at the arm end can be damaged easily. Be careful. If there is damage or oil leakage, stop the work. Oil leakage can cause the bucket or attachment to fall off and cause death. Repair damage or oil leakage before you continue the work.**
- **This machine has a system that gives a warning when the pressure in the quick coupler system is not kept. If the buzzer operates in the cab, find out the cause before you continue the work. Especially, make sure that there is no oil leakage in each component of the quick coupler. If you are not sure, consult your Komatsu distributor.**
- **Before you start the work, make sure that the quick coupler main switch (1) is at the OFF position (A).**

1. Put the quick coupler above the new bucket or attachment.
2. Set the quick coupler main switch (1) to the ON position (B).

   REMARK

   The switch has a safety lock mechanism to prevent incorrect operation. Slide the lock to your side and push the switch. The lamp on the switch comes on and the alarm buzzer operates.

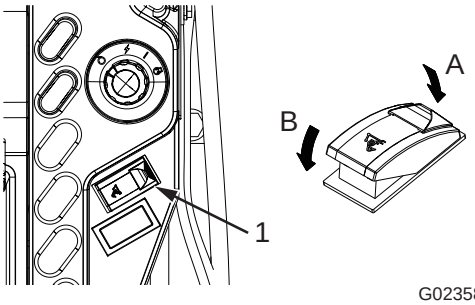

G0235850

3. Push and hold the quick coupler operation switch (2) on the left work equipment control lever to operate the quick coupler to the release side.
4. In some designs of the quick coupler, one of the hydraulic functions of the machine (bucket, boom, arm, or swing) must be activated to increase the pressure in the hydraulic system. To use the swing function, set the swing lock switch to ON. For details, see “Swing Lock Switch (3-136)”. The quick coupler moves to the release side.
5. Move the bucket cylinder, arm, and boom as necessary to set the quick coupler to the mating part of the bucket or attachment.
   Obey the instructions of the quick coupler manufacturer.

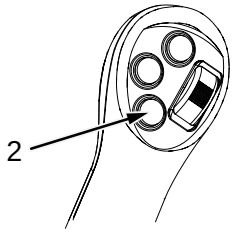

G0251391

6. Release the quick coupler operation switch (2).
   If it is necessary to connect the bucket or attachment to the hydraulic system of this machine, obey all the instructions in “How to Remove and Install Attachment (6-25)”.
7. The quick coupler locks to the bucket or attachment. Operate one of the work equipment levers as necessary to increase the system pressure.

WARNING

If you do not make sure that the quick coupler is locked, it can cause death to others around. Carefully make sure that the lock of the quick coupler is complete and secure. If necessary, carefully follow the manufacturer’s instructions. Install safety devices if the manufacturer requires.

8. If Attachment locking sensor is set to “Without”, the confirmation screen is shown on the monitor.
   Make sure that the pin is locked, and then tap the checkmark button on the monitor.
9. Set the quick coupler main switch (1) to the OFF position (A).
   The lamp goes off and the buzzer stops.

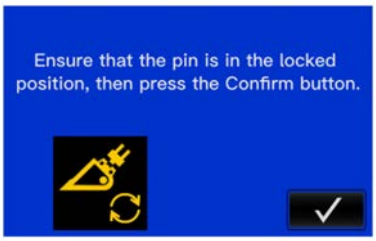

G0243551

Attachment Lock System

When a quick coupler compatible with the attachment lock system is installed, the attachment lock system is activated when Attachment locking sensor is set to “With”. When the attachment lock system becomes activated, the lock state of the quick coupler and the engaged state with the attachment are shown on the indicator display of the machine monitor and at the bottom of the screen.

For the setting of Attachment locking sensor, see “Set Attachment Locking Sensor (6-7)”.

For the indicator display, see “Quick Coupler Indicator (3-40)”.

Display of Lock Status and Attachment Engagement Status

If you set the quick coupler main switch (1) to the ON position (B) while the attachment lock system is activated, the lock state and the engaged state with the attachment are shown at the bottom of the screen of the machine monitor.

The lock state and the engaged state with the attachment shown at the bottom of the screen are as follows.

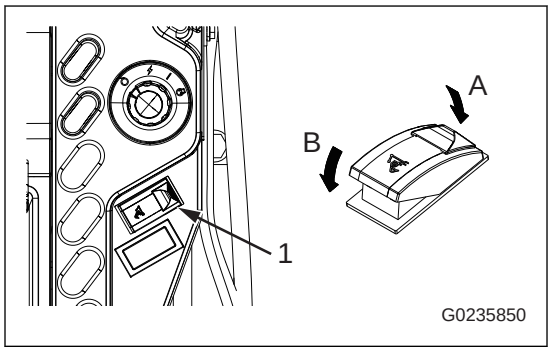

- If Attachment Locking Sensor is set to “With (Lehnhoff)”
  (A): Locked, and attachment engaged
  (B): Unlocked, and attachment engaged
  (C): Unlocked, and attachment disengaged
  (D): Locked, and attachment disengaged

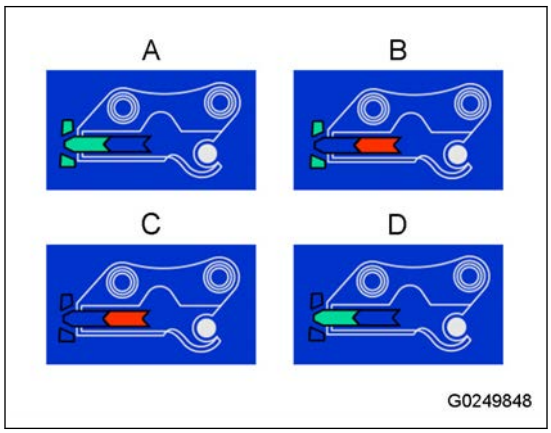

- If Attachment Locking Sensor is set to “With (Rototilt)”
  (A): Locked, and attachment engaged
  (B): Unlocked
  (C): Locked, and attachment disengaged

REMARK

If a problem related to the quick coupler exists, the lock state and the engaged state with the attachment are not shown.

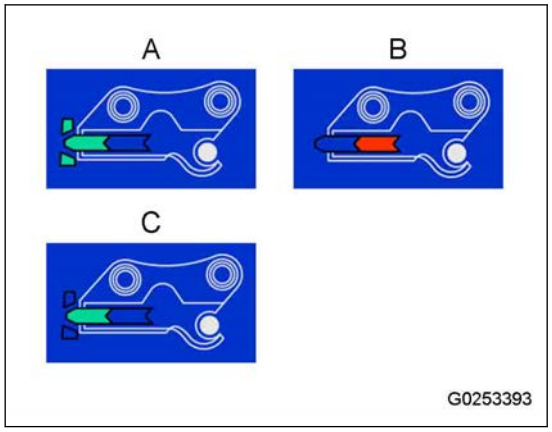

Work Screen When Attachment is Not Engaged

If you set the quick coupler main switch (1) from the ON position (B) to the OFF position (A) in the "Locked, and attachment disengaged" state (D), a screen to make sure if you do the work while the attachment is disengaged is shown.

If you do the work while the attachment is disengaged, tap the checkmark button.

If you tap the Return button, the buzzer operates continuously. Set the quick coupler main switch (1) to the ON position (B) again to do the operation again.

Handle Laser Catcher

NOTICE

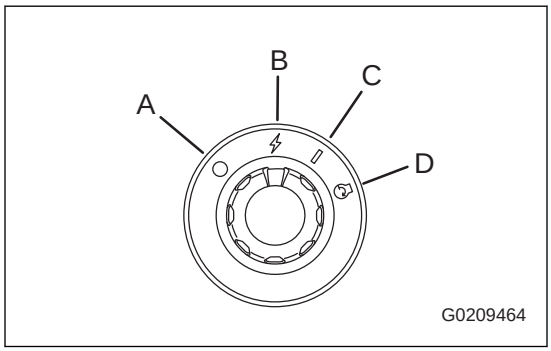

- **Read the Operation and Maintenance Manual of the laser catcher carefully, and obey its recommendations. If you are not sure how to install or operate it, consult your Komatsu distributor.**
- **If you set the starting switch to the ON position (C) or the START position (D), the laser catcher receives power. If you connect or disconnect the connector of the laser catcher while the power is supplied, it can cause a failure. Connect or disconnect the connector while the power is not supplied.**
- **After you install the laser catcher, make sure that the setting of the machine control system is correct before you use it for the first time. If you have a question, consult your Komatsu distributor.**
- **For machines with extension arm, install the laser catcher to the main arm, not to the extension arm.**
  If you install the laser catcher to the extension arm, the 2D laser will not operate correctly.

Component Names of 2D Laser Catcher

(1) Laser catcher connector

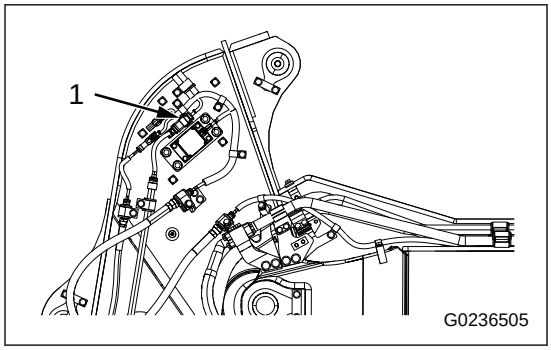

2D Laser Setting

Input the installation position of the laser catcher to use the 2D laser function correctly.

For information on how to use the 2D laser, see “Laser Benchmark (3-411)”.

1. Tap “2D Laser Setting” (1).

   REMARK

   If the usage limit of the attachment setting is set by the supervisor setting and you log on with an ID other than the supervisor, the supervisor setting passcode is required. For the supervisor setting, see “Supervisor Setting (3-110)”.

G0261386

2. Measure the dimensions to input the installation position information of the laser catcher.
3. Tap the dimension and angle input fields.
4. Input the dimension or angle on Numeric Input screen. Tap “OK” button.
5. Examine the input numeric value. If there is no problem, tap the checkmark button.

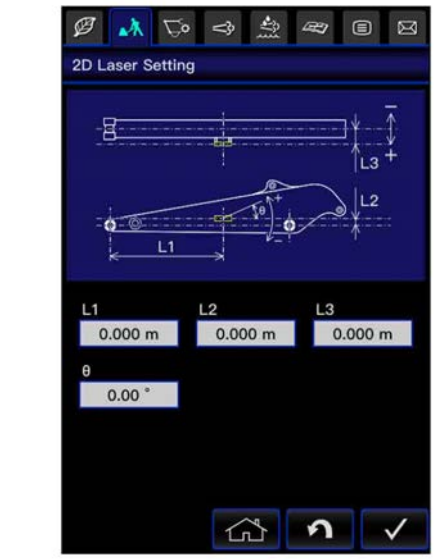

G0261387

Handle Bucket with Hook

When you use the bucket with hook, check that there is no damage to the hook, stopper, or hook mounting part. If a problem is found, consult your Komatsu distributor.

Work Precautions

Precautions for Lifting Operations

If lifted load largely swings, it is dangerous. During lifting operations, reduce the engine speed and perform the operation in L mode.

The wire or sling may come off the hook, depending on the working posture. Pay sufficient attention to the hook angle so that the sling does not come off.

Do not move the machine during the lifting operation.

If the bucket with hook is turned 180 ° and used for operations, it will hit the arm during the bucket DUMP operation. Be careful when using it.

If you are planning to newly install a hook, ask your Komatsu distributor for installation.

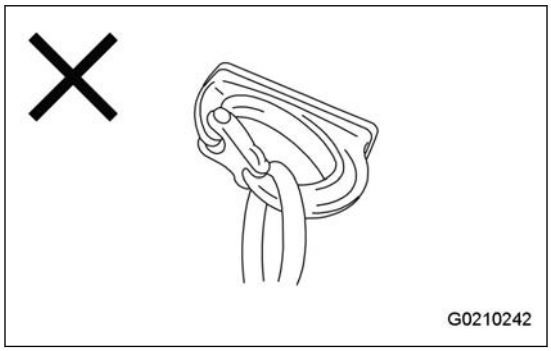

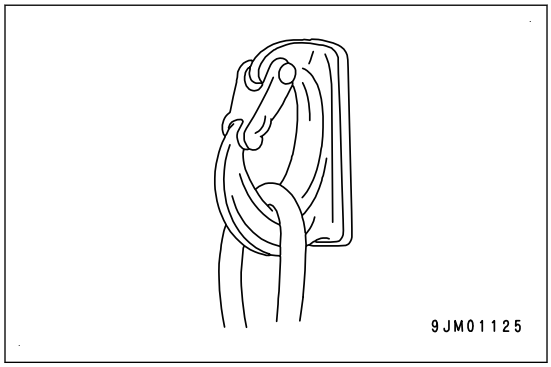

Handle Machine Ready for Installation of Attachment

Explanation of Components on Machines with Attachment

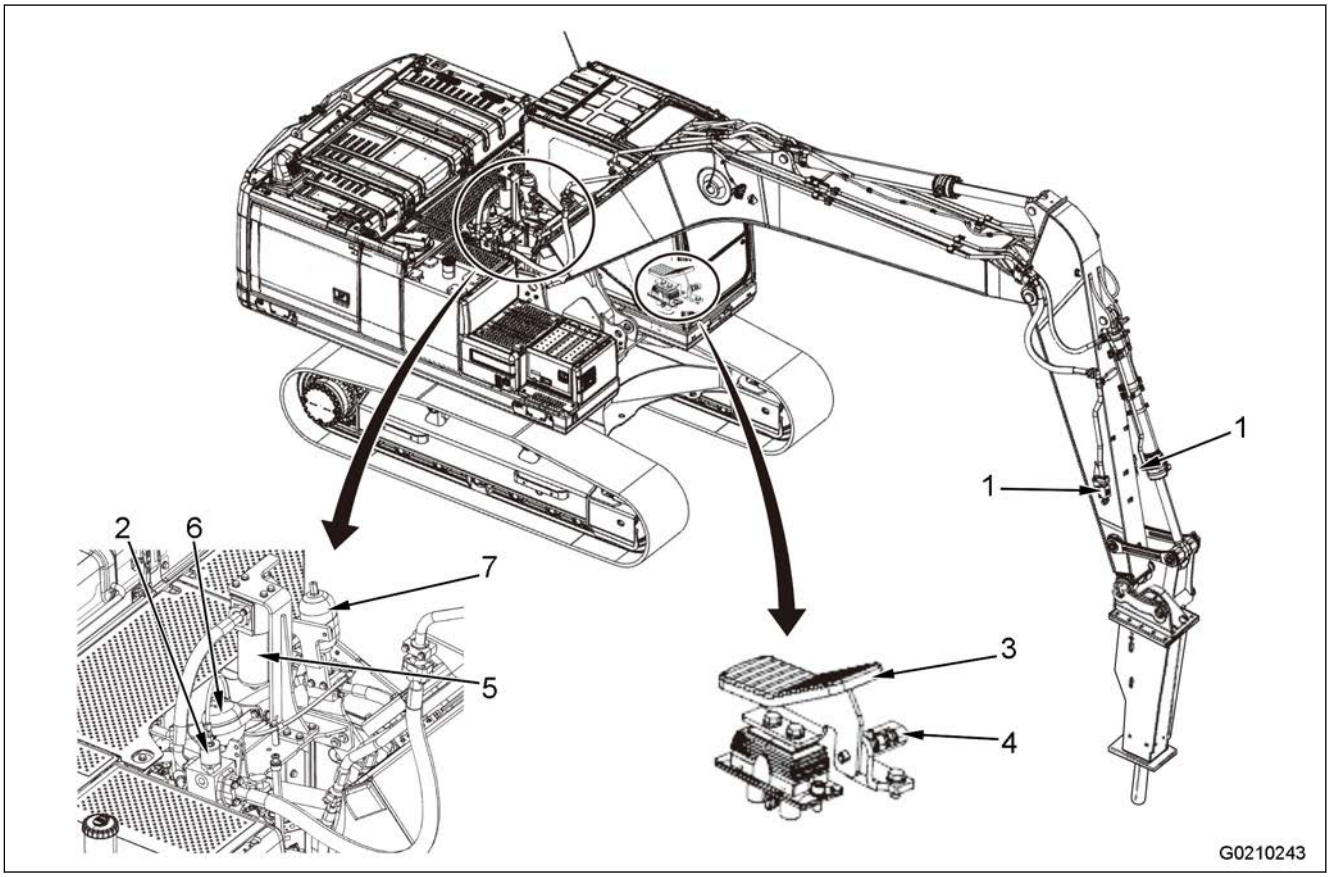

(1) Stop valve
(2) Selector valve
(3) Attachment control pedal
(4) Lock pin
(5) Additional filter for breaker
(6) Accumulator (for low pressure)
(7) Accumulator (for high pressure: if equipped)

Stop Valve

The stop valve stops the flow of the hydraulic oil.

(a) FREE

Hydraulic oil flows.

(b) LOCK

Hydraulic oil stops.

When you remove or install the attachments, set this valve to the LOCK position.

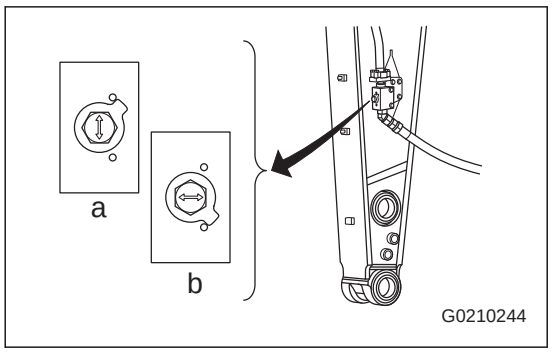

REMARK

The oil pressure can be remained on the attachment side even when the stop valve is in the LOCK position (b).
Before you remove or install the attachment, release the internal pressure in the hydraulic circuit. For details, see “How to Remove and Install Attachment (6-25)”.

Selector Valve

The selector valve changes the flow of the hydraulic oil.

It changes automatically in response to the selected working mode. It is necessary to change the working mode in response to the attachment that is installed. To change the working mode, see “How to Change-over and Connect Hydraulic Circuit for Machine Ready for Installation of Attachment (6-22)”.

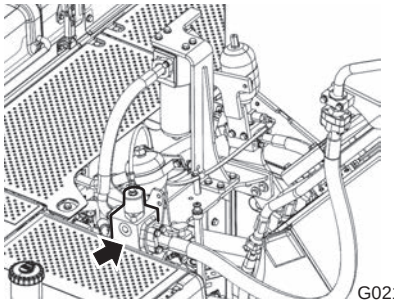

NOTICE

If you added a service circuit from the attachment manufacturer, the return circuit does not change automatically in some cases.

Control Pedal

⚠ WARNING

If you operate the machine with your foot on the pedal and push it by mistake, the machine can suddenly move off. It can cause personal injury or death. Unless you operate the pedal, lock the pedal with the lock pin.

When you set the lock lever to the FREE position, the machine monitor automatically changes to the standard screen.

Operate the attachment with the control pedal.

When you push the front side, neutral, or rear side of the pedal, the attachment operates as follows.

Hydraulic breaker

Front side of pedal (A)

Operation

Pedal NEUTRAL (N)

Stop

Rear side of pedal (B)

Stop

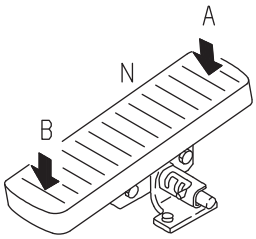

REMARK

For other attachments, consult the attachment manufacturer about the operation of the pedal and attachment when you install it to the machine.
Before you use the attachment, examine the operating state.

Lock Pin

NOTICE

Stop the engine always before you change the position of the lock pin.
When the breaker is used, if you set the lock pin to the (c) position and push the pedal to the (D) side, it can be a cause of malfunction and damage of the breaker. When you use the breaker, be sure to set the lock pin to the position (b).

The lock pin locks the control pedal.

Position (a)

LOCK

Position (b)

Pedal full stroke position only on front (rear is locked)

Position (c)

The pedal full stroke position on front and rear

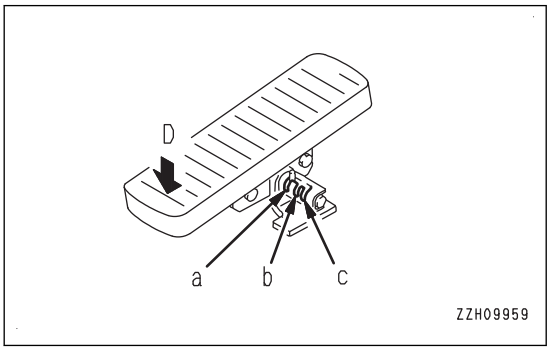

REMARK

Set the lock pin at the (a) position unless you use the attachment.
When you use the breaker, select an applicable attachment, and use it at the position (b).
When you use the 2-way general attachment, select an applicable attachment, and use it at the position (c).
For the selection of the attachment, see “Attachment Icon (3-41)”.

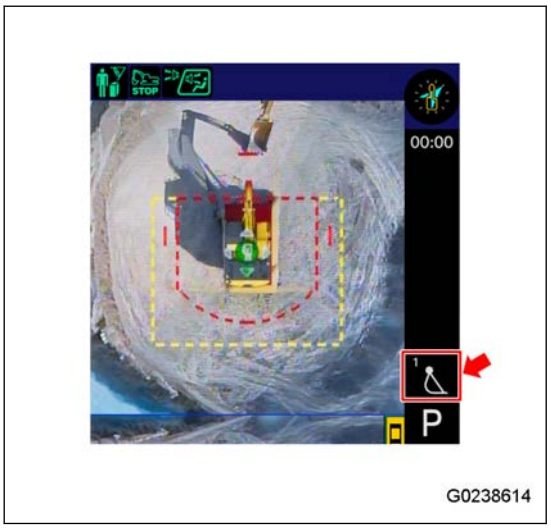

Additional Filter for Breaker

NOTICE

Be sure to install an additional filter in the return circuit on machines with the hydraulic breaker.

The additional filter for breaker prevents deterioration of the hydraulic oil when the breaker is used.

REMARK

Oil flows only when the attachment is set to the breaker.

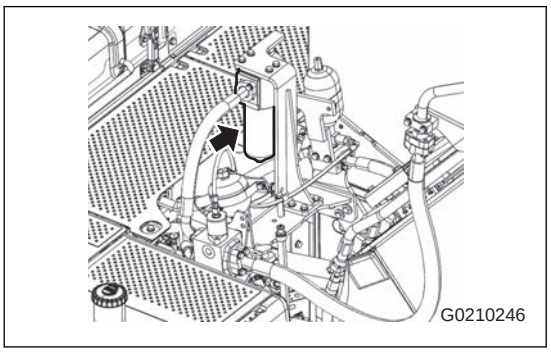

Accumulator

WARNING

The accumulator is filled with the high-pressure nitrogen gas. If it is not handled correctly, an explosion can occur and it can cause personal injury or death. When you handle it, obey the items that follow.

- **The pressure in the hydraulic circuit cannot be fully released. When you remove the hydraulic equipment, do not stand in the direction that the oil spurts out. Loosen the screws slowly.**
- **Do not disassemble.**
- **Do not let an open flame be near, or do not dispose of it in fire.**
- **Do not do the drilling, welding or flame-cutting.**
- **Do not hit it or roll it or give shocks to it.**
- **When you discard it, the gas must be released. Consult your Komatsu distributor to do this work.**

NOTICE

For machines with the breaker, you need to install an accumulator, that agrees with the model number of the breaker manufacturer, to the breaker piping. If you do the breaker operation without an accumulator, the service life of the machine will be reduced. Consult your Komatsu distributor for more information about the breaker.

The accumulators (1) and (2) are installed to reduce the peak pressure in the hydraulic circuit when the breaker is used. Do not touch this device during the normal operation.

To examine the accumulator, see “How to Examine and Release Nitrogen Gas Charge Pressure in Accumulator (For Breaker) (4-78)”.

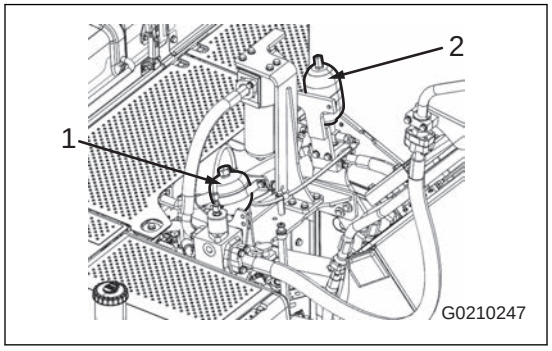

How to Change-over and Connect Hydraulic Circuit for Machine Ready for Installation of Attachment

NOTICE

When you replace the attachment, select the attachment installed on the machine monitor.
For the selection of the attachment, see “How to Change Attachment (3-302)”.
The safety standard set pressure of the service valve must be adjusted in some attachments. Consult your Komatsu distributor for adjustment.

Connect Hydraulic Circuit of Attachment

When you connect the attachment, connect the hydraulic circuit as follows.

1. Make sure that the stop valve is at the LOCK position (b).
   (a) FREE: Hydraulic oil flows (direction of arrow is parallel to longitudinal direction of arm)
   (b) LOCK: Hydraulic oil does not flow (direction of arrow is at right angle to longitudinal direction of arm)

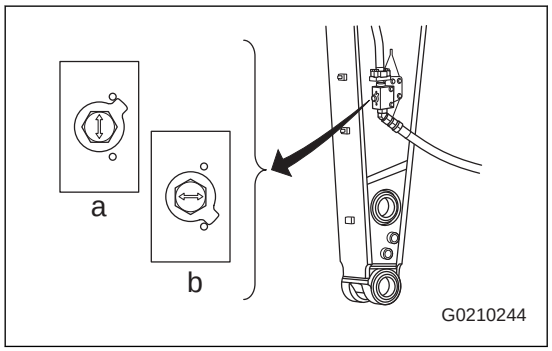

   Turn the value (1) until it hits the stopper (2) to set the FREE and LOCK position of the stop valve.

   Make sure that the control valve of the stop valve is in the FREE or LOCK position.

   Do not use the valve while it is not set correctly.

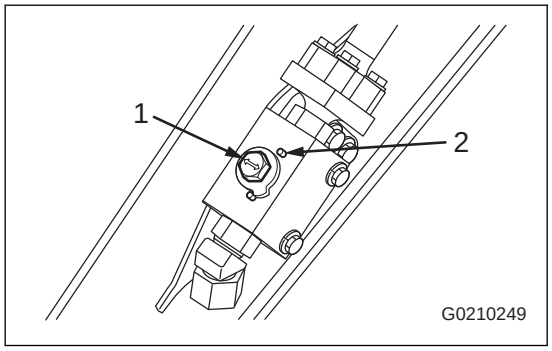

2. Remove the plugs (3) (2 places on right and left sides) at the front end of the stop valve pipe.

   Be careful not to lose or cause damage to the removed parts.

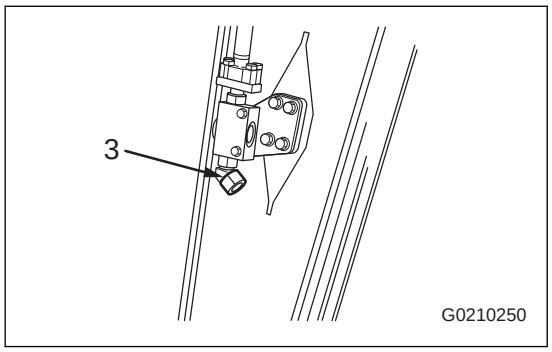

3. Connect the attachment piping (4) supplied by the attachment manufacturer to the part where the plug is removed.

   See the flow direction of the oil and be careful not to make a mistake of it.

   REMARK

   The method of connection changes in response to the attachment manufacturer because the size of the fitting, added accumulator, or such are different. Consult your Komatsu distributor.

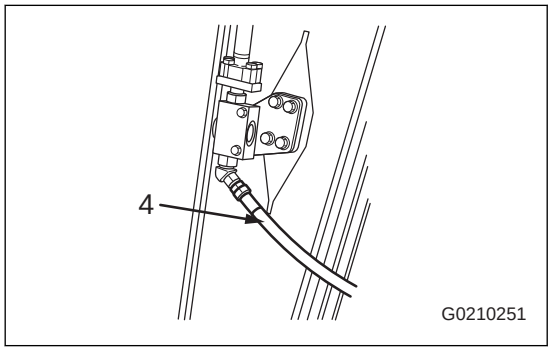

4. Select the installed attachment on the machine monitor.

   For the selection of the attachment, see “How to Change Attachment (3-302)”.

5. After you connect the pipes, bleed air from the hydraulic circuit as follows.

   NOTICE

   If the air bleed procedure from the attachment is specified by the manufacturer, obey the specified procedure.

   1) Start the engine.

      Start the engine, keep it at low idle for 10 minutes, and then start the next work.

   2) Operate the attachment control pedal continuously approximately 10 times while the engine runs at low idle.

      Fully bleed air from the attachment circuit.

   3) Stop the engine.

      Keep the machine stopped for 5 minutes or more.

   4) Start the engine.

      The air bubbles in the oil in the tank are discharged.

   5) Make sure that there is no oil leakage. Wipe off spilled oil

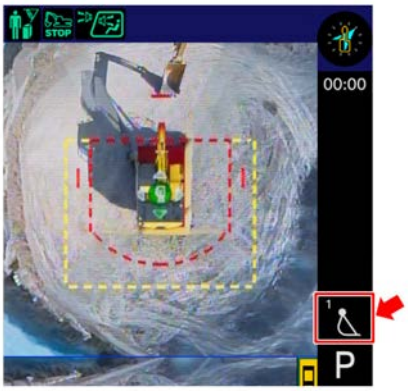

G0238614

Pedal Operation and Oil Flow of Machines to Which Attachment is Installed

The direction of the pedal operation and the oil flow are as shown in the figure.

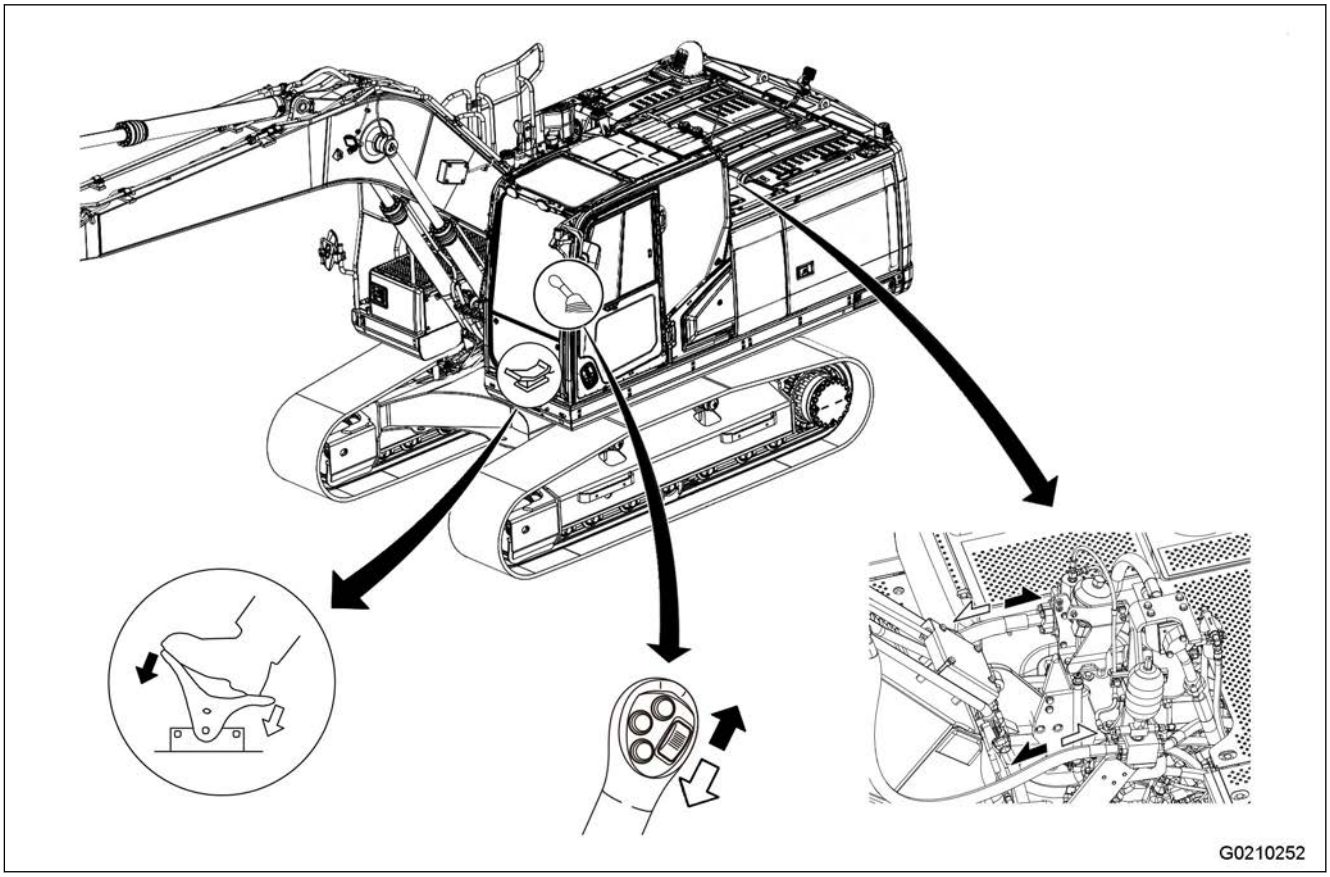

- Push the front side of the pedal.
  Oil flows into the piping at the left side of the work equipment.
- Push the rear side of the pedal.
  Oil flows into the piping at the right side of the work equipment.

REMARK

- For machines with the breaker, push only the front side of the pedal.
- When you set the attachment control to the work equipment lever switch, the work equipment lever switch can be used to control it.
  For the work equipment lever switch setting, see “Lever Switch Assignment (3-58)”.

Change over Hydraulic Circuit

When you change the attachment, select the attachment installed on the machine monitor.

The hydraulic circuit and the safety valve set pressure automatically change in response to the selected attachment.

For the selection of the attachment, see “How to Change Attachment (3-302)”.

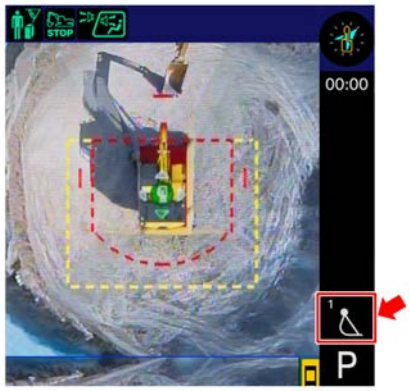

G0238614

How to Remove and Install Attachment

⚠ WARNING

- **Lower the work equipment to the ground, and stop the engine.**
- **The oil pressure can be remained on the attachment side even when the stop valve is in the LOCK position.**
  Before you remove or install the attachment, release the internal pressure in the hydraulic circuit. For details, see “How to Remove and Install Attachment”.
- **The pressure in the hydraulic circuit cannot be fully released. When you remove the hydraulic equipment, do not stand in the direction that oil spurts out. Loosen the screws slowly.**
- **Immediately after the engine is stopped, the parts and oil are very hot, and they can cause burn injury. Wait for the temperature to go down, and then start the work.**

How to Remove Attachment

1. Turn the starting switch to the ACC position (B) or ON position (C), and log on to the system.

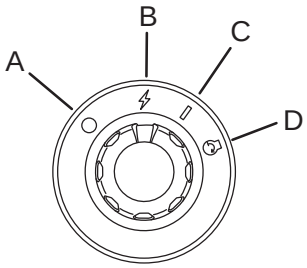

G0209464

2. Select the attachment installed to the machine on the machine monitor.

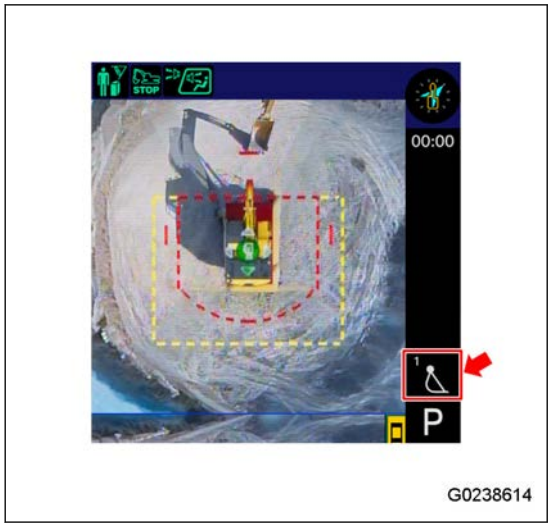

3. Operate the operating part (g) of the lock lever to set it to the FREE position (F).

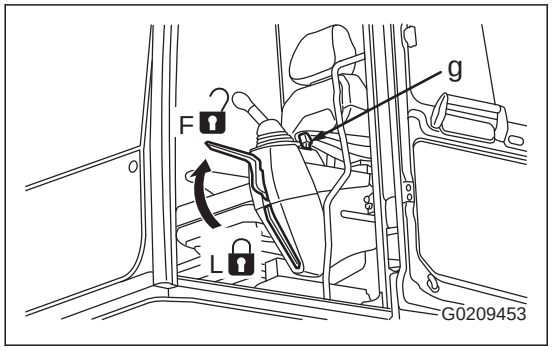

4. Operate each work equipment control lever and attachment control pedal fully to the front, rear, right, and left 2 to 3 times in 15 seconds to release the internal pressure in the hydraulic circuit.

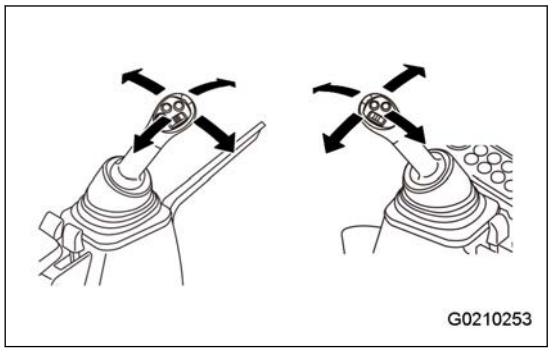

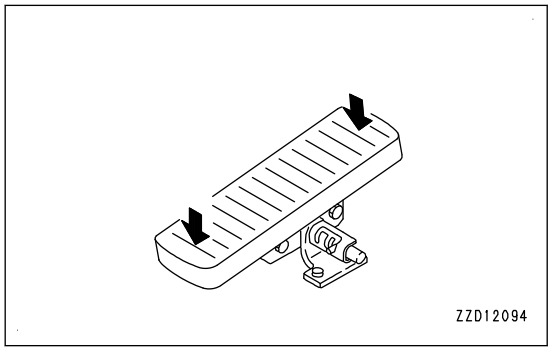

5. Operate the operating part (g) of the lock lever to set it to the LOCK position (L).

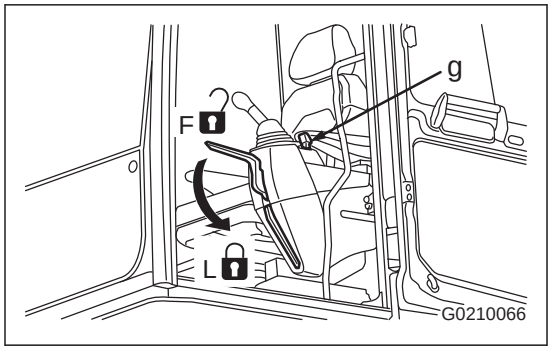

6. Loosen the oil filler cap (F) on the top of the hydraulic tank slowly to release the internal pressure.
7. Makes sure that the hydraulic oil temperature becomes low.

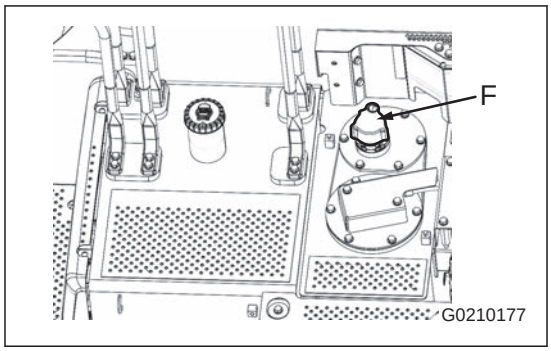

8. Set the stop valves installed on the 2 sides of the arm to the LOCK position (b).
   (a) FREE: Hydraulic oil flows (direction of arrow is parallel to longitudinal direction of arm)
   (b) LOCK: Hydraulic oil does not flow (direction of arrow is at right angle to longitudinal direction of arm)

   Turn the value (1) until it hits the stopper (2) to set the FREE and LOCK position of the stop valve.

   Make sure that the control valve of the stop valve is in the FREE or LOCK position.

   Do not use the valve while it is not set correctly.

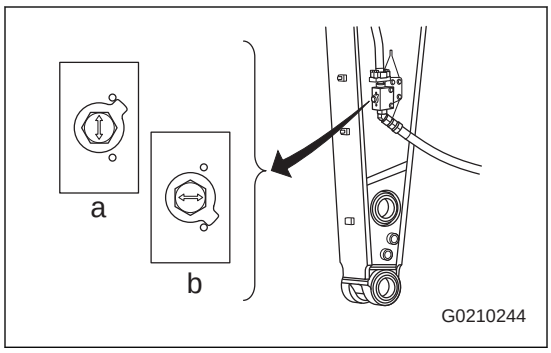

9. Remove the hose at the stop valve side, and install the plugs to the outlets (2 places).

   The plug is used to prevent the malfunction of attachment caused by the mixture of foreign material. Install them securely, and store the attachment.

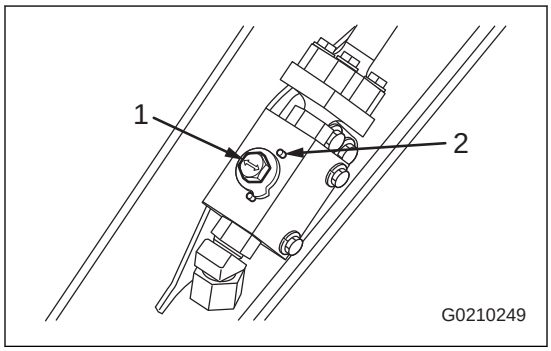

10. Pull out the mounting pins (2 places), remove the attachment, and install the bucket.

    For the installation procedure of the bucket, see “How to Replace and Invert Bucket (3-285)”.
11. Examine the oil level in the hydraulic tank.

    Set the work equipment in the maximum reach posture.

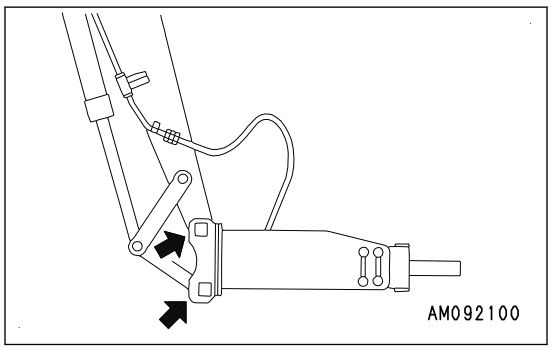

12. Select the attachment installed to the machine on the machine monitor.

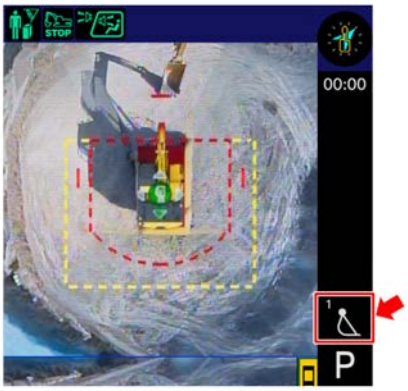

G0238614

How to Install Attachment

1. Remove the bucket.

   For the removal procedure of the bucket, see “How to Replace and Invert Bucket (3-285)”.

2. Put the attachment on a level area, install the pin (A) and pin (B) in this sequence to the arm.
3. Lower the attachment to the ground, and stop the engine.

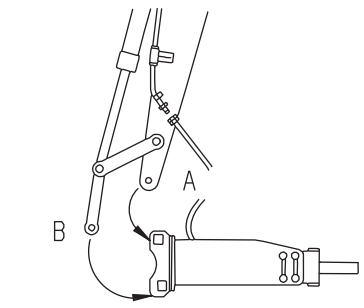

ZZH05813

4. Set the stop valves installed on the 2 sides of the arm to the FREE position (a) not to let the pressure remain between the stop valve and frond end of the pipe.

   (a) FREE: Hydraulic oil flows (direction of arrow is parallel to longitudinal direction of arm)

   (b) LOCK: Hydraulic oil does not flow (direction of arrow is at right angle to longitudinal direction of arm)

   Turn the value (1) until it hits the stopper (2) to set the FREE and LOCK position of the stop valve.

   Make sure that the control valve of the stop valve is in the FREE or LOCK position.

   Do not use the valve while it is not set correctly.

5. Start the engine, run it at low idle for approximately 5 seconds, and stop it.

   The pressure is accumulated in the accumulator.

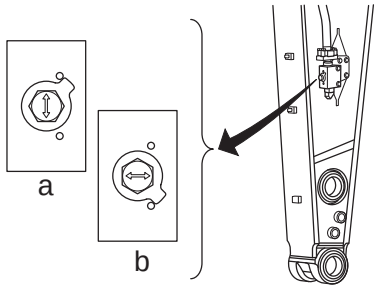

G0210254

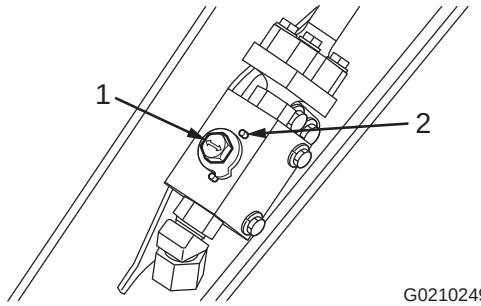

G0210249

6. Turn the starting switch to the ACC position (B) or ON position (C), and log on to the system.
7. Select the attachment installed to the machine on the machine monitor.

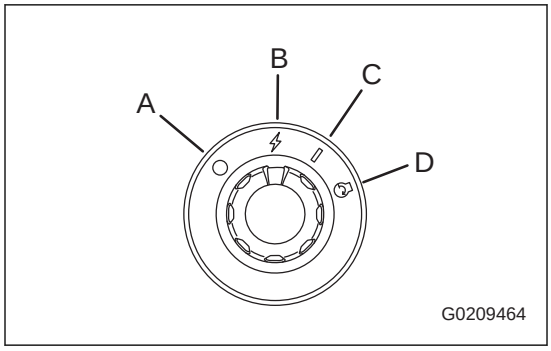

8. Operate the operating part (g) of the lock lever to set it to the FREE position (F).

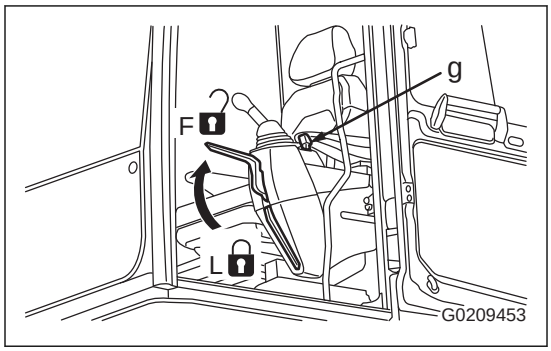

9. Operate each work equipment control lever and attachment control pedal fully to the front, rear, right, and left 2 to 3 times in 15 seconds to release the internal pressure in the hydraulic circuit.

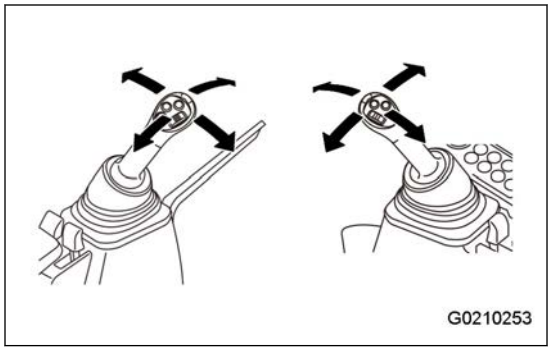

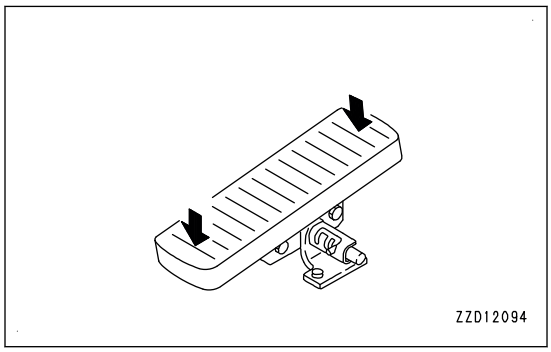

10. Operate the operating part (g) of the lock lever to set it to the LOCK position (L).

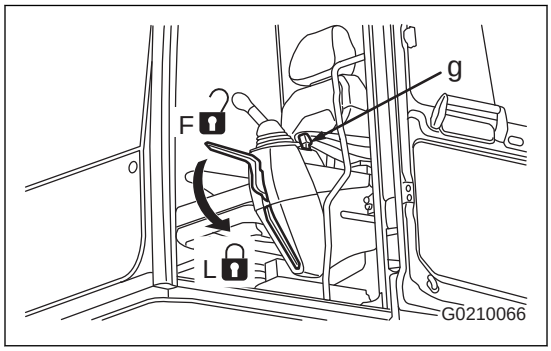

11. Loosen the oil filler cap (F) on the top of the hydraulic tank slowly to release the internal pressure.
12. Makes sure that the hydraulic oil temperature becomes low.

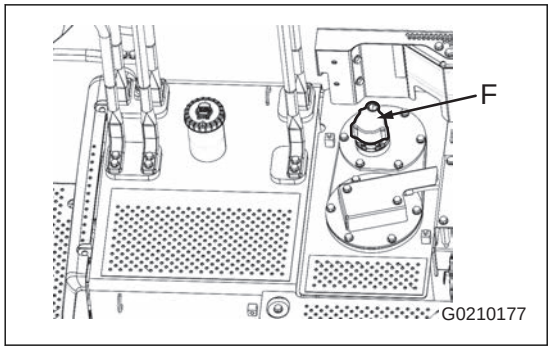

13. Set the stop valves installed on the 2 sides of the arm to the LOCK position (b).
    (a) FREE: Hydraulic oil flows (direction of arrow is parallel to longitudinal direction of arm)
    (b) LOCK: Hydraulic oil does not flow (direction of arrow is at right angle to longitudinal direction of arm)

    Turn the value (1) until it hits the stopper (2) to set the FREE and LOCK position of the stop valve.

    Make sure that the control valve of the stop valve is in the FREE or LOCK position.

    Do not use the valve while it is not set correctly.

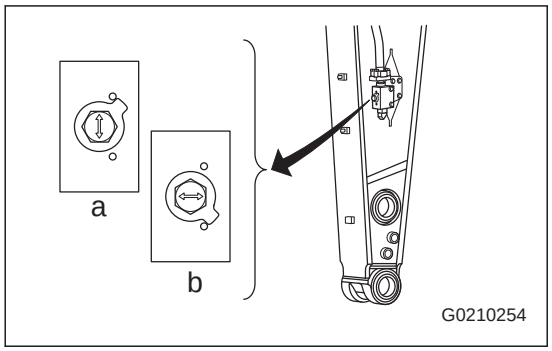

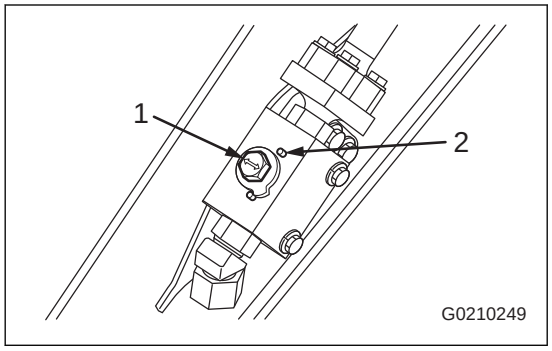

14. Remove the plugs (3) (2 places on right and left sides) at the front end of the stop valve pipe.

    Be careful not to let dirt or mud attach to the hose fitting.

    If the O-ring has damage, replace it with a new one.

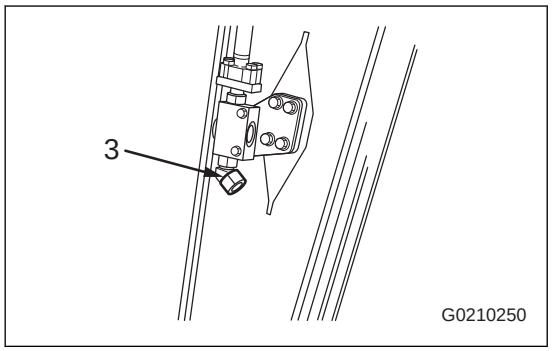

15. Connect the attachment piping (4) supplied by the attachment manufacturer to the part where the plug is removed.

    See the flow direction of the oil and be careful not to make a mistake of it.

    REMARK

    The method of connection changes in response to the attachment manufacturer because the size of the fitting, added accumulator, or such are different. Consult your Komatsu distributor.

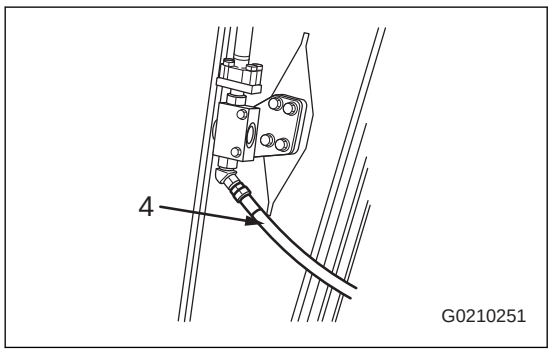

16. Set the stop valves installed on the 2 sides of the arm to the FREE position (a).

    (a) FREE: Hydraulic oil flows (direction of arrow is parallel to longitudinal direction of arm)

    (b) LOCK: Hydraulic oil does not flow (direction of arrow is at right angle to longitudinal direction of arm)

    Turn the value (1) until it hits the stopper (2) to set the FREE and LOCK position of the stop valve.

    Make sure that the control valve of the stop valve is in the FREE or LOCK position.

    Do not use the valve while it is not set correctly.

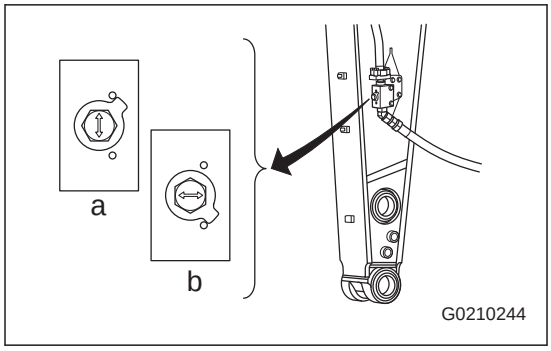

17. Examine the oil level in the hydraulic tank.

    Set the work equipment in the maximum reach posture.

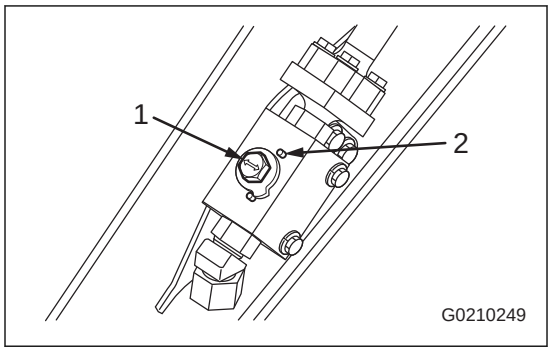

18. Select the attachment installed to the machine on the machine monitor.

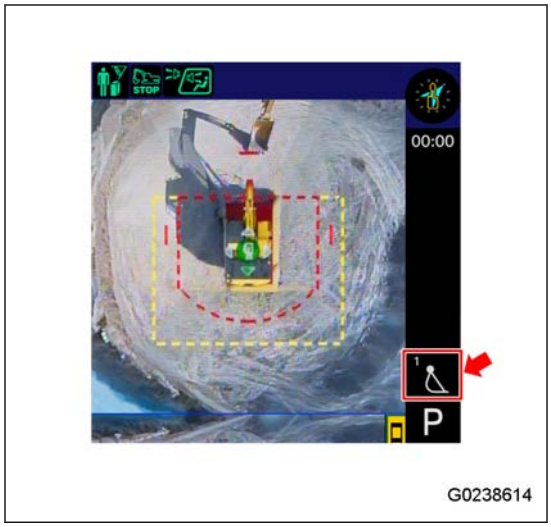

Operate Attachment

⚠ WARNING

- **If you operate the pedals when the engine speed decreases by the auto-deceleration function, the engine speed will suddenly increase. Operate it carefully.**
- **If you operate the machine with your foot on the pedal and push it by mistake, the attachment can suddenly move off. It can cause personal injury or death. Do not put your foot on the pedal unless the pedal operation is required.**
- **When the attachment is not used, set the lock pin of the pedal to the LOCK position not to operate the pedal by mistake.**
- **When you hold the object with the attachment, do not release the pedal while the attachment holds it.**
- **If a problem is found in the attachment pressure adjustment system, stop the operation of the attachment, move the machine to a safe area, and consult your Komatsu distributor for inspection and maintenance.**

When you use the attachment such as a breaker, select the attachment installed to the machine on the machine monitor. For the selection of the attachment, see “How to Change Attachment (3-302)”.

The information such as the attachment flow rate and dimensions can be registered to the machine. For details how to register the attachment information, see “How to Edit Attachment Setting (3-303)”.

Operate Breaker

NOTICE

Change the attachment to the breaker when you do the breaker operation. If you do not change the attachment to the breaker, the breaker can have damage.

1. Change the attachment to the breaker.

   For the procedure to change the attachment, see How to Change Attachment (3-302).

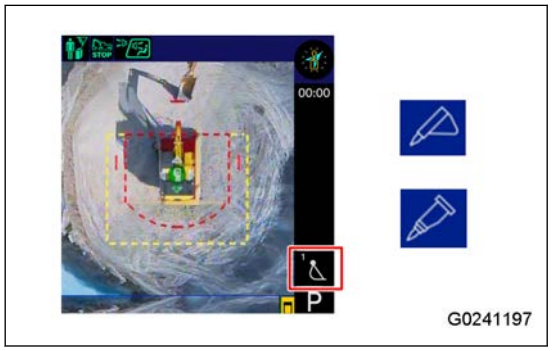

2. Set only the front side of the lock pin to the FREE position (b).
3. Push the front side of the pedal.

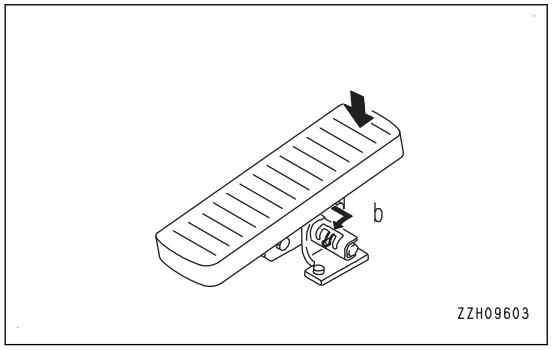

The breaker operates.

Check Points Before You Use Breaker

- Make sure that the stop valves installed to the piping for the inlet port and outlet port on the side surface of the arm are at the FREE position (a).
  (a) FREE: Hydraulic oil flows (direction of arrow is parallel to longitudinal direction of arm)
  (b) LOCK: Hydraulic oil does not flow (direction of arrow is at right angle to longitudinal direction of arm)

  Turn the value (1) until it hits the stopper (2) to set the FREE and LOCK position of the stop valve.

  Make sure that the control valve of the stop valve is in the FREE or LOCK position.

  Do not use the valve while it is not set correctly.

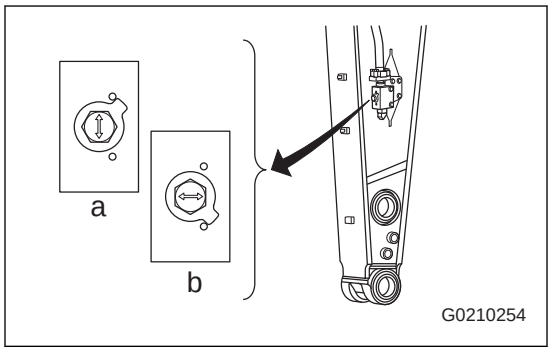

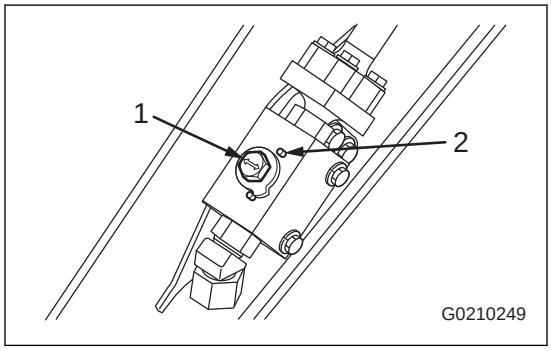

- The attachment icon is changed to the breaker.
- The maintenance interval of the hydraulic oil and its element must be shorter than usual.
  If the hydraulic breaker is installed to the machine, the hydraulic oil deteriorates faster than in the normal bucket digging operation. See “Maintenance Interval for Hydraulic Breaker (4-19)”, and find out the maintenance interval.

  Consult the attachment manufacturer whether the installation of the accumulator for attachment circuit is necessary or not.

  When you handle the breaker, obey the instruction given in the manual of the manufacturer of breaker and use it correctly.

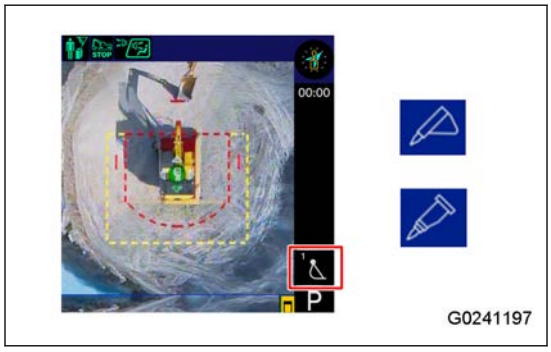

How to Operate 2-Way General Attachment

1. Change the attachment icon to the attachment to be used.

   For the procedure to change the attachment, see “How to Change Attachment (3-302)”.

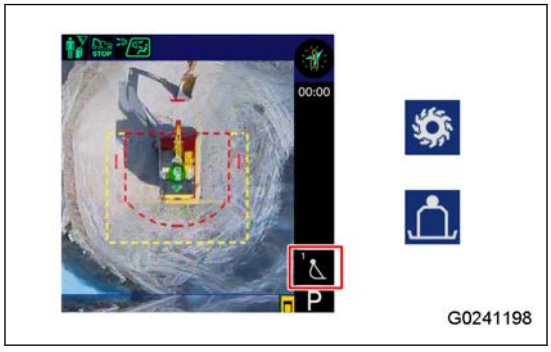

2. Set the lock pins (front and rear) to the FREE position.
3. Push the front or rear side of the pedal.

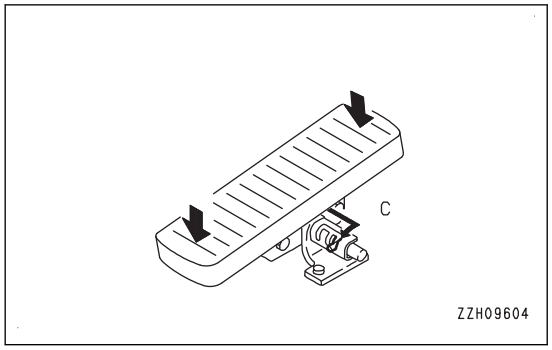

The attachment operates.

Check Points Before You Use 2-Way General Attachment

- Make sure that the stop valves installed to the piping for the inlet port and outlet port on the side surface of the arm are at the FREE position (a).
  (a) FREE: Hydraulic oil flows (direction of arrow is parallel to longitudinal direction of arm)
  (b) LOCK: Hydraulic oil does not flow (direction of arrow is at right angle to longitudinal direction of arm)

  Turn the value (1) until it hits the stopper (2) to set the FREE and LOCK position of the stop valve.

  Make sure that the control valve of the stop valve is in the FREE or LOCK position.

  Do not use the valve while it is not set correctly.

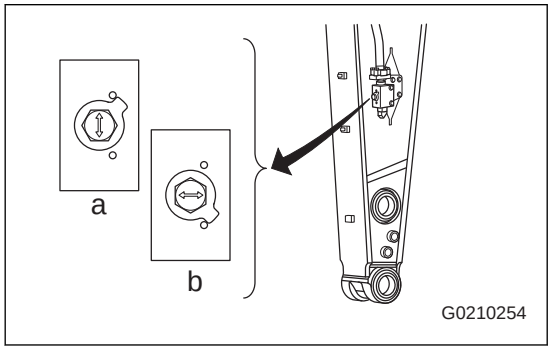

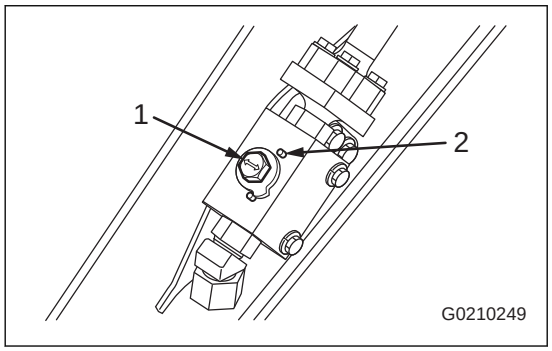

- The attachment icon must be changed to the attachment to be used.

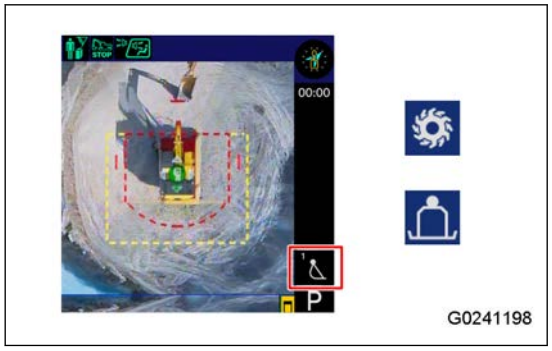

- If you install the hydraulic forks, Thumb, or Grapple, make sure that the attachment closes when you raise the switch of the lever, and that the attachment opens when you lower the switch before you operate the attachment.
- While the attachment is in operation or while it holds an object, there is a danger that the held object falls or crushed object flies over. Do not let the workers come in the work range or the area where has a danger of falling and flying object.
  If you need to go near the attachment, stop the engine, and release the remaining pressure. If the engine cannot be stopped, be careful of the possibility that the attachment moves when you operate the machine.

For other precautions when you handle the attachment, obey the instruction manual from the attachment manufacturer and use the attachment correctly.

Long-Term Storage

NOTICE

If there is no breaker or general attachment installed, operating the pedal may cause overheating and other problems.

If the equipment is not to be used for a long time, do as follows.

- Set the stop valve in LOCK condition.
- Install the plugs to the piping end of the stop valve.
- Set the lock pin in LOCK position.

Maintenance of Additional Filter for Breaker

⚠ WARNING

- **After the engine is stopped, the parts and oil are very hot and they can cause burn injury. Wait for the temperature to go down, and then start the work.**
- **When you use the compressed air, personal injury can be caused if dirt flies over.**
  Put on the protective equipment such as protective eyeglasses and dust mask.

NOTICE

For the element replacement interval, see “Maintenance Interval for Hydraulic Breaker (4-19)”.

Items to be prepared

Container to receive drained oil

Prepare the machine for maintenance as follows.

1. Lower the work equipment to the ground, and stop the engine.

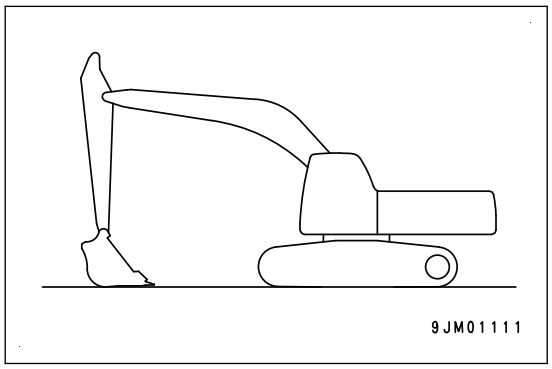

2. Turn the starting switch to the ACC position (B) or ON position (C), and log on to the system.

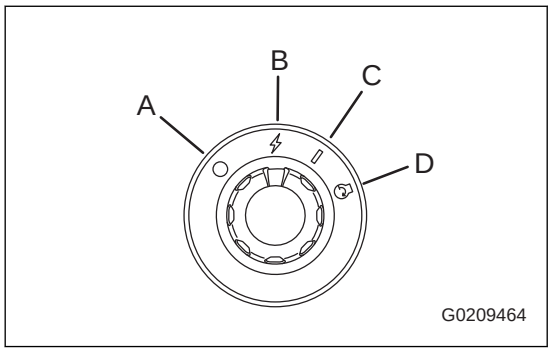

3. Select the attachment installed to the machine on the machine monitor.

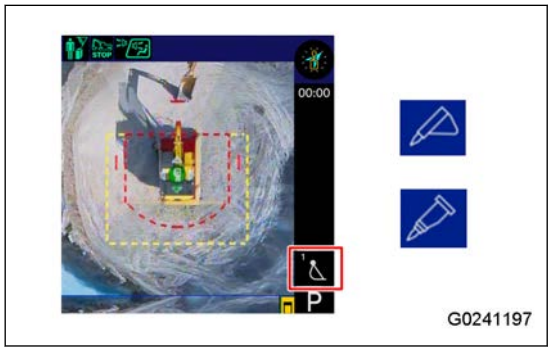

4. Operate the operating part (g) of the lock lever to set it to the FREE position (F).

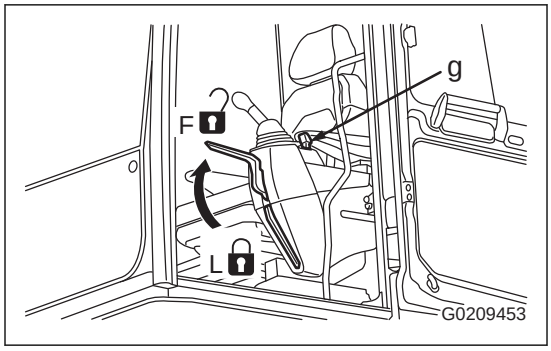

5. Operate each work equipment control lever and attachment control pedal fully to the front, rear, right, and left 2 to 3 times in 15 seconds to release the internal pressure in the hydraulic circuit.

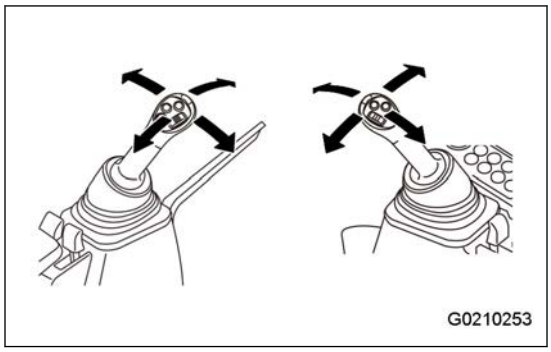

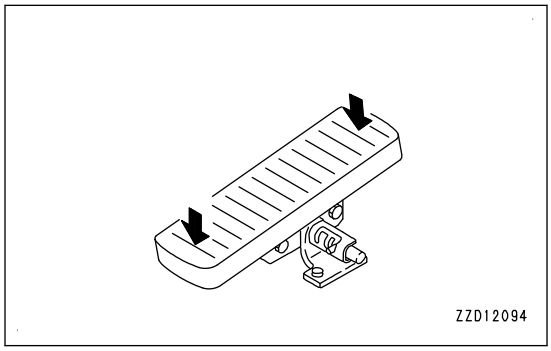

6. Operate the operating part (g) of the lock lever to set it to the LOCK position (L).

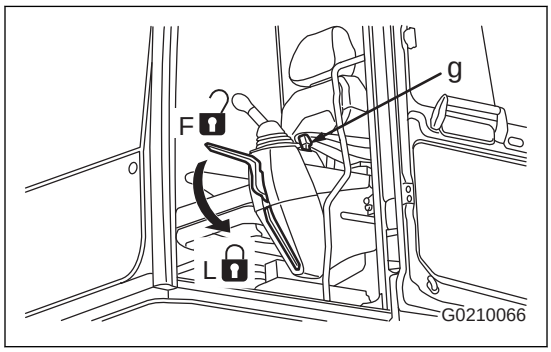

After the preparation work is completed, replace the additional filter for breaker as follows.

How to Replace Additional Filter Element for Breaker

1. Loosen the oil filler cap (F) on the top of the hydraulic tank slowly to release the internal pressure.

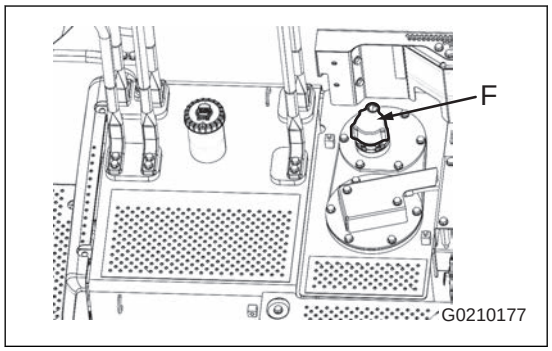

2. Put an oil container below the additional filter at the position shown with the arrow.

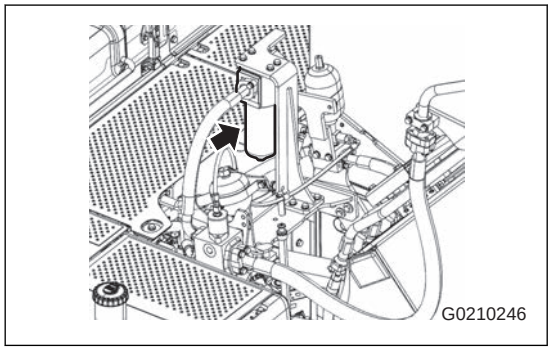

3. Remove the plug (3), and drain hydraulic oil accumulated in the filter case (1) to the prepared oil container.
4. Make sure that the hydraulic oil temperature goes down, turn the filter case (1) counterclockwise to remove it, and then remove the element (2).
5. Clean the removed parts, and install the new element (2).

   REMARK

   The element (2) must be installed in the correct direction. Set the direction (Y) with the holes up, and insert the hole of the element (2) to the protrusion part in the filter head (6).
6. Install the new O-ring (4) to the filter case (1), and tighten the filter case (1) into the filter head (6).

   Tightening torque: 90 to 110 Nm {9.2 to 11.2 kgfm, 66.5 to 81 lbft}
7. Clean the removed plug (3), and install the new O-ring (5) to the plug (3).
8. Install the plug (3) to the filter case (1).

   Tightening torque: 20 to 25 Nm {2.05 to 2.55 kgfm, 14.8 to 18.4 lbft}

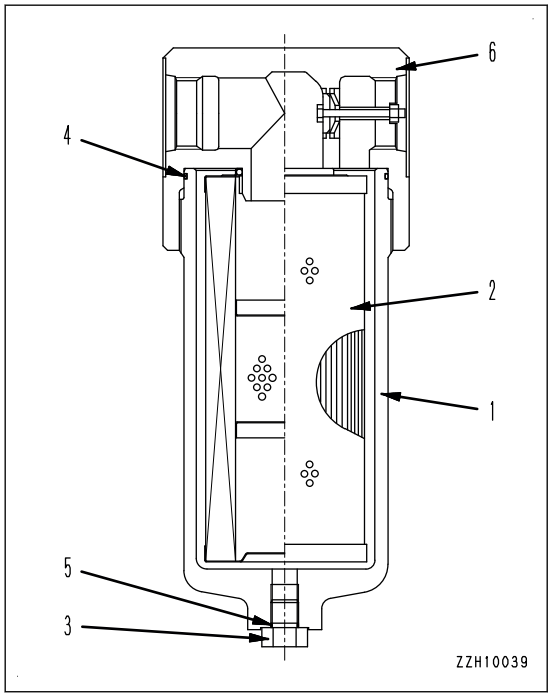

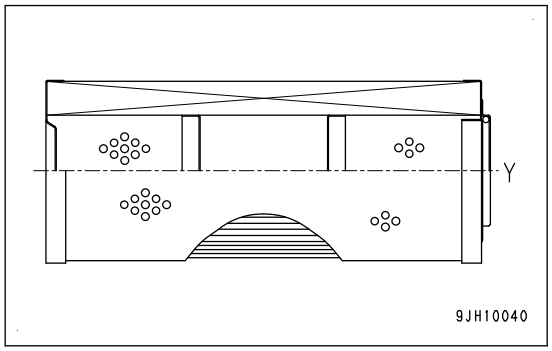

How to Replace Additional Pilot Filter Element for Breaker

1. Loosen the oil filler cap (F) on the top of the hydraulic tank slowly to release the internal pressure.

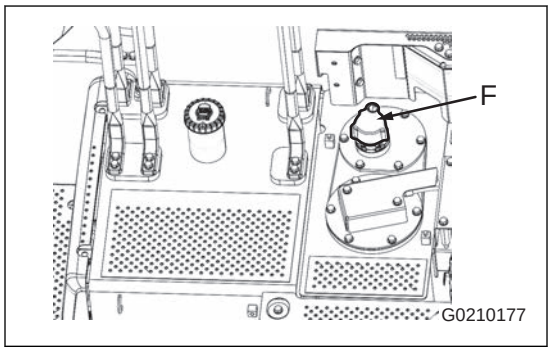

2. Put the oil container below the additional pilot filter at the position shown with the arrow.

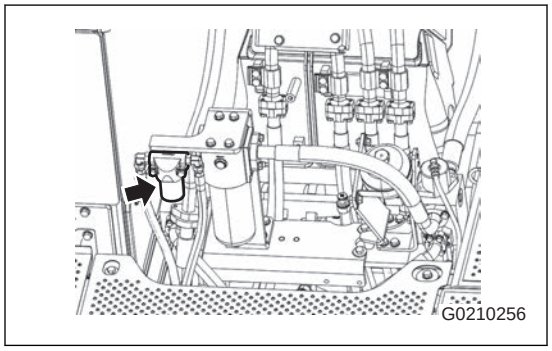

3. Make sure that the hydraulic oil temperature goes down, turn the filter case (1) counterclockwise to remove it, and then remove the element (2).

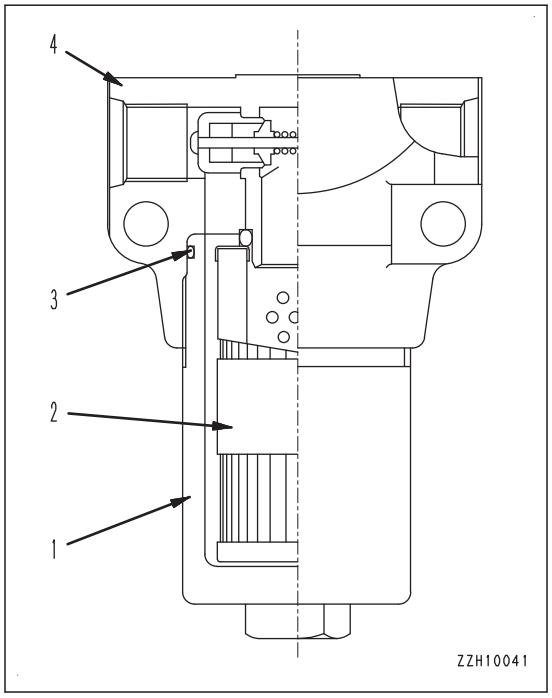

4. Clean the removed parts, and install the new element (2).

   REMARK

   The element (2) must be installed in the correct direction. Set the direction (Y) with the holes up, and insert the hole of the element (2) to the protrusion part in the filter head (4).

5. Install the new O-ring (3) to the filter case (1), and tighten the filter case (1) into the filter head (4).

   Tightening torque: 25 to 35 Nm {2.6 to 3.6 kgfm, 18.8 to 26 lbft}

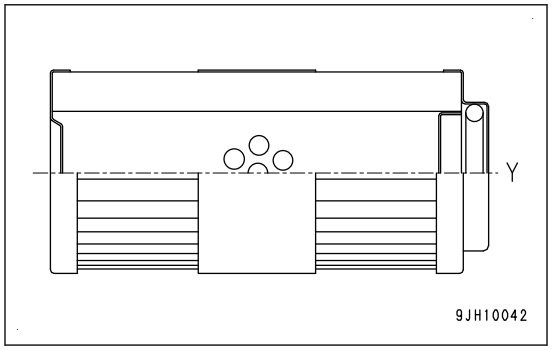

Specifications

Hydraulic Specifications

- Max. flow at merge: 430 ℓ/min (maximum value of ATT flow rate setting)
- Safety valve relief set pressure of service valve
  Port A: 29.9 MPa {305 kgf/cm^2, 4340 PSI} (The attachment setting is other than breaker)
  Port B: 29.9 MPa {305 kgf/cm^2, 4340 PSI} (The attachment setting is other than breaker)
- Safety valve cracking pressure of service valve
  Port A: 24.5 MPa {250 kgf/cm^2, 3560 PSI} (The attachment setting is other than breaker)
  Port B: 24.5 MPa {250 kgf/cm^2, 3560 PSI} (The attachment setting is other than breaker)
- Safety valve relief set pressure of service valve
  Port A: 29.9 MPa {305 kgf/cm^2, 4340 PSI} (The attachment setting is breaker)
  Port B: 24.5 MPa {250 kgf/cm^2, 3560 PSI} (The attachment setting is breaker)
- Safety valve cracking pressure of service valve
  Port A: 24.5 MPa {250 kgf/cm^2, 3560 PSI} (The attachment setting is breaker)
  Port B: 20.1 MPa {205 kgf/cm^2, 2920 PSI} (The attachment setting is breaker)

Other than the ones above, the safety valve relief set pressure: 20.6 MPa {210 kgf/cm^2, 2990 PSI} and safety valve cracking pressure: 15.2 MPa {155 kgf/cm^2, 2200 PSI} are available. Consult your Komatsu distributor.

When the tool control is installed

- Safety valve relief set pressure of service valve
  Port A: 44.3 MPa {452 kgf/cm^2, 6430 PSI}
  Port B: 44.3 MPa {452 kgf/cm^2, 6430 PSI}
- Safety valve cracking pressure of service valve
  Port A: 38.9 MPa {397 kgf/cm^2, 5650 PSI}
  Port B: 38.9 MPa {397 kgf/cm^2, 5650 PSI}

Attachments and Options

⚠ WARNING

- **Make sure that you fully read and understand the attachment part and option part of the instruction manuals of the attachment and this Operation and Maintenance Manual.**
- **Installation of an attachment or option can be the safety issue. Consult your Komatsu distributor before the installation.**
- **If you install the attachment or option without consulting your Komatsu distributor, there is a danger that not only a safety issue but also an unwanted effect occurs on the machine operation and service life of the machine.**
- **We will not be responsible for personal injury, damage, or property damage caused by attachments or optional devices other than authorized products.**

Select Attachment

⚠ WARNING

There is a danger that the work equipment hits the cab or the machine body for some types or combinations of the work equipment.
When you use the work equipment for the first time, make sure that there is no interference with the machine in advance.

Categories of Use

Select an applicable attachment for each use.

General digging

Digging or loading work of sand, gravel, clay, or such

Light digging

Digging and loading work of dry and loose sandy soil, or muddy soil.

Loading

Loading work of dry and loose sandy soil

REMARK

To dig or load hard soil or soft rock, the heavy duty bucket that has high durability and wear and abrasion resistance is recommended.

Combination of Attachments

PC220LC, PC220LCI

NOTICE

When the boom is fully lowered during oblique digging, it interferes with the undercarriage. Operate the boom carefully.

Table of Combination of Attachments can be Installed to Standard Arm

○: Can be used, △: Can be used only for light duty work, x: Cannot be used

Name	Tooth mounting pin	Capacity m^3 {cu/yd}	Opening width			Use	Strengthened arm (2900mm {9 ft 6 in})
			Main body mm {ft in}	Side shroud mm {ft in}	Side cutter mm {ft in}		
Rock (standard) bucket	Horizontal	0.80 {1.05}	1050 {3 ' 5 "}	1110 {3 ' 8 "}	-	General digging	○
Reinforced bucket	Vertical Horizontal	0.80 {1.05}	1050 {3 ' 5 "}	-	1170 {3 ' 10 "}	General digging	○
Me bucket	Horizontal	0.80 {1.05}	1050 {3 ' 5 "}	-	1170 {3 ' 10 "}	General digging	○
Me bucket	Horizontal	0.93 {1.22}	1200 {3 ' 11 "}	-	1330 {4 ' 4 "}	General digging	○
Me bucket	Horizontal	1.05 {1.4}	1330 {4 ' 4 "}	1400 {4' 7"}	-	General digging	△

Track Shoes Selection

Select the applicable track shoe in response to the operating conditions.

How to Select Track Shoe

1. See the Application column of the Categories of Use table to identify the ground to do the work, and see the Category column.

Categories of Use

Category	Application	Caution when you use
A	Area with rocks, rivers Normal soil	• Set the travel speed to Lo on a rough ground where there are large obstacles such as boulders or fallen trees.
B	Normal soil Soft ground	• These track shoes cannot be used on a rough ground where there are large obstacles such as boulders or fallen trees. • Set the travel speed to Hi or Mi on the level ground. If you need to move the machine over an obstacle, lower the travel speed to 1/2 of Lo.
C	Extremely soft ground (swampy ground)	• These track shoes can be used only when the machine sinks and it cannot travel. • These track shoes cannot be used on a rough ground where there are large obstacles such as boulders or fallen trees. • Set the travel speed to Hi or Mi on the level ground. If you need to move the machine over an obstacle, lower the travel speed to 1/2 of Lo.
D	Paved road surface	• The gradeability of the flat shoe is low. Operate the machine carefully.
E	Paved road surface	• To protect the rubber shoes, be sure to obey “Handle Rubber Pad Shoes and Road Liners (6-44)”.

2. See the Category column in List of shoe specifications, and select an applicable shoe for the use.

	PC220LC, PC220LCI	
	Specification	Classification
Standard	700 mm {2 ft 4 in} (triple)	B
Option	600 mm {2 ft 0 in} (triple)	A
Option	800 mm {2 ft 7 in} (triple)	C
Option	900 mm {2 ft 11 in} (triple)	C
Option	860 mm {2 ft 10 in} (swampy)	C
Option	600 mm {2 ft 0 in} (flat)	D
Option	600 mm {2 ft 0 in} (road liner)	E

Precaution for Track Shoe Selection

- The working conditions “B” and “C” are for wide shoe, their use is limited.
  Fully examine the precautions for use and the condition to use, and then use an applicable shoe.
- When you select the shoe width, select the narrowest shoes possible to make the machine in the range where there is no problem in the machine flotation and ground contact pressure.
  If the shoes wider than necessary are used, the load on the shoe will increase. It can cause problems such as bending of the shoe, crack on the link, damage or come-off of the pin, and looseness of the shoe bolts.

Handle Rubber Pad Shoes and Road Liners

When you use the rubber pad shoe or road liner, be sure to obey the precautions to handle the devices as follows.

Working Environment

- Use the rubber pad shoe and road liner mainly for the work on a paved road surface.
  If it is used on a road other than a paved road surface, its durability can decrease largely because of the cut or chipped rubber.
  Especially, avoid the operations that follow.
  - Operations on broken pieces of concrete or gravel
  - Operation on sharp protrusions such as reinforcing bars or glass (operation to go over the sheet piles in the ground in particular)
  - Operation to go over the concrete road shoulder or operation in rocky terrain and rocky rivers
- Be careful not to slip when you operate the machine on a road with water, ice, snow, gravel, or such. Be very careful when you load or unload the machine.
- Use the rubber pad shoe and road liner in the range of -25 to 65 ℃ {-13 to 149 ℉}because of the properties of rubber.

Working Conditions

- If you operate the machine with the foot tension shown in the figure, do the cross-digging work, operation on a slope, or operate the machine with frequent steering, excessive load can be applied to the rubber, and it can cause damage.
- If a special work equipment is installed, the durability of rubber cannot be guaranteed in some cases.

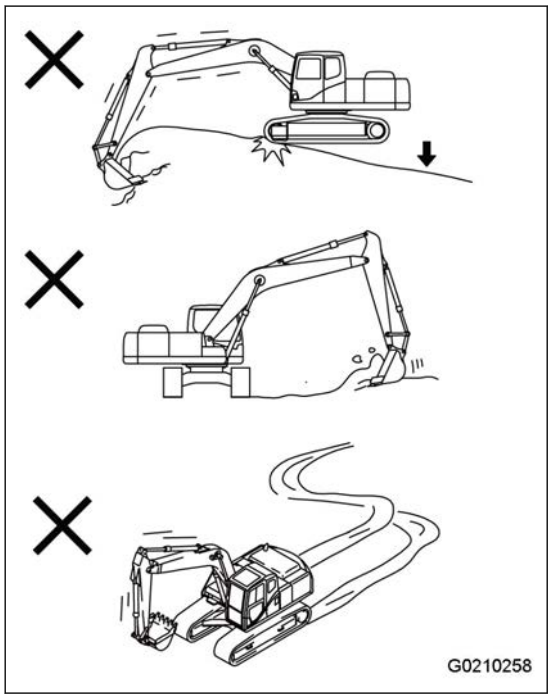

Storage and Maintenance

- Be careful not to let oil or grease attach on the rubber. If it is attached, wipe it off immediately.
- Install the rubber pad shoes and road liners (A) continuously to all the links.
  If it is not installed, rubber can be deformed largely, and it can cause damage.
- When you store the rubber pad shoe and road liner (A) for a long time, store them indoors not to expose to direct sunlight and rain.

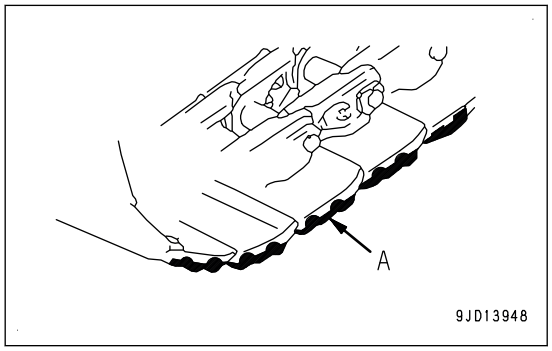

Degree of Damage on Rubber

- When you operate the machine on a concrete road, rubber can be attached to the road surface and black marks can be shown on the road.
- If a part of the rubber is chipped or cut, and the appearance deteriorates, it does not cause damage to the overall shoes immediately. It can be used as it does not cause damage to the road surface.

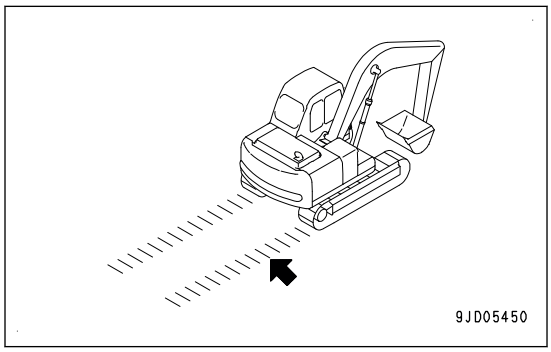

How to Examine Roadliners

If the road liners are in the following condition, they must be replaced. Ask your Komatsu distributor for replacement.

Lug height

- If lug height (a) is less than 5 mm {0.197 in}, replace it with a new part.
  If lug height (a) is reduced by wear, the drawbar pull will drop.

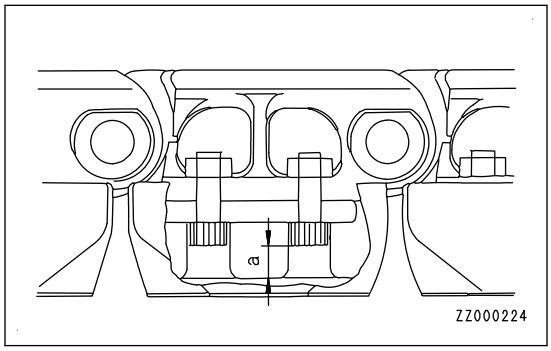

For judgment of replacement, repair, and continuation of use of the road liner, consult your Komatsu distributor.

How to Replace Roadliners

- When all the road liners of the machine need to be replaced, ask your Komatsu distributor to replace them.
- When replacing only part of the road liner, use the special road liner removal tool. Order the tool from your Komatsu distributor.

Bucket Teeth Selection

Depending on the working conditions, there is a danger that an adapter and tooth may be lost. Select either one from the vertical pin type of tooth or horizontal pin type of tooth that is suitable for the purpose.

While the standard teeth of both vertical and horizontal pin types may be used widely, the following kinds of teeth are recommended depending on the working conditions.

How to Select Teeth

Vertical Pin Type Tooth

General digging: Digging and loading normal soil, such as sand, gravel, clay, etc.

Light-duty digging: Digging and loading dry and loose sandy soil, or muddy soil.

Loading: Loading of dry and loose earth.

Horizontal Pin Type Tooth

Heavy-duty digging: Digging and hammering work on hard soil, soil with rocks, scraping or other heavy-duty work

- The heavy-duty bucket is of a horizontal pin type and as such, use it for heavy duty-digging.

Long-Life Tooth

- Jobsites where long wear life is required, such as when loading hard rocks.
- Jobsites where no penetration is needed, such as when working with crushed rocks after blasting or ripping.
- Jobsites where heavy-duty operations are performed, such as hitting or pulling up rocks with the tips of the teeth.

Self-Sharpening Tooth (Horizontal Pin Type, Vertical Pin Type)

- Jobsites requiring penetration such as digging and loading sandy or clayey soil.

Selection Guide for Vertical or Horizontal Pin Type Tooth

			Applicable work site			
			Rock	Crushed stone	Clayey soil, Decompressed granite soil	Sand
Type of operation	Heavy ↑ ↓ Light	Digging with hammering work	Horizontal pin type teeth		Vertical pin type teeth	
		Scraping down	Horizontal pin type teeth		Vertical pin type teeth	
		General excavation	Vertical pin type teeth			
		Loading	Vertical pin type teeth			

Handle Trapezoidal Bucket

Use the trapezoidal bucket when digging trapezoidal ditches in fields. By installing the angle plate with different angle, it is possible to excavate 3 angles of ditch slope face (45°, 40°, and 38°).

- The position of installation of the angle plate is different for each ditch slope face angle (45°, 40°, and 38°).

Ditch slope face angle	Installation hole				
	(A)	(B)	(C)	(D)	(E)
45°	○	-	○	-	-
40°	○	○	○	○	-
38°	○	○	-	○	○

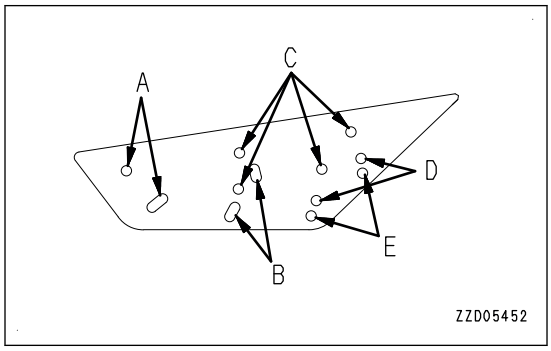

Digging Work

Operate the boom, arm, and bucket so that line (1) of the side plate of the bucket is always perpendicular to the ground face, then perform digging.

Horizontal indexing plate (2) is welded to the bucket pin hole portion, so when digging, operate so that the plate is horizontal during the digging operation.

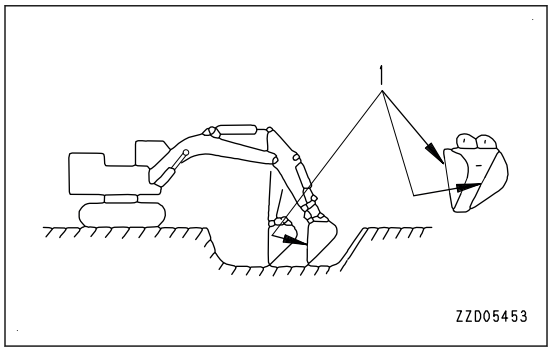

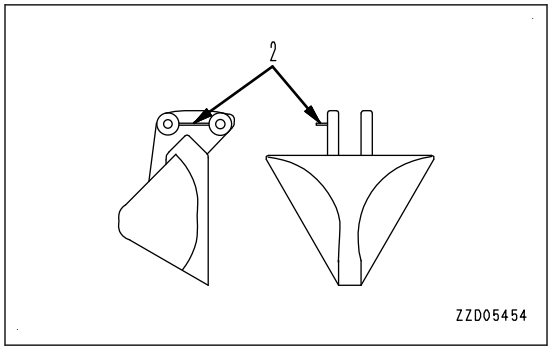

Ditch Slope Face Angle 45°.

Use the bucket only or install the angle plate using the ditch slope angle holes, and use the method above for digging.

Item	Ditch slope face angle (F)
	45°
Digging width (upper face) (G)	3165 mm {10 ft 5 in}
Digging depth (H)	1385 mm {4 ft 7 in}
Digging width (bottom face) (I)	400 mm {1 ft 4 in}

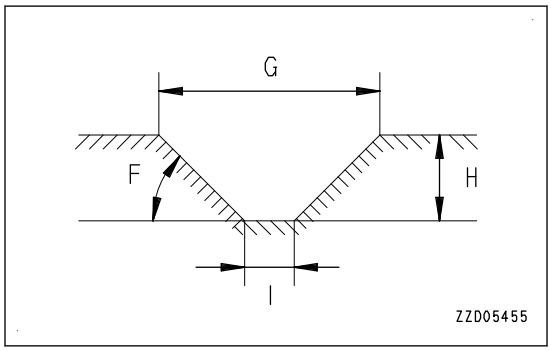

Ditch Slope Face Angle 40° and 38°

Install the angle plate using the respective ditch slope angle holes, and use the method above for digging.

Even when the angle plate is fitted, keep the line on the bucket side plate perpendicular to the ground face during the digging operation.

Item	Ditch slope face angle (F)	
	40°	38°
Digging width (upper face) (G)	3280 mm {10 ft 9 in}	3310 mm {10 ft 10 in}
Digging depth (H)	1230 mm {4 ft 0 in}	1165 mm {3 ft 10 in}
Digging width (bottom face) (I)	350 mm {1 ft 2 in}	330 mm {1 ft 1 in}

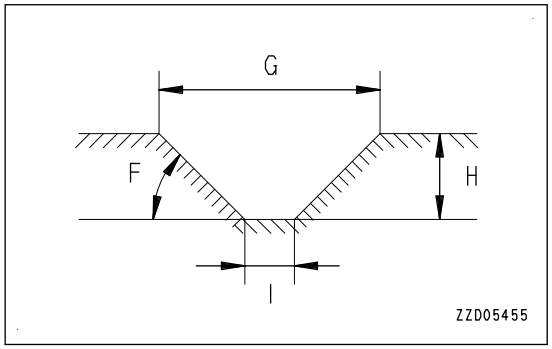

Handle Extension Arm

When an extension arm is installed, the bucket will hit the boom cylinder foot and revolving frame when the arm is pulled in, so be extremely careful during operations and when transporting the machine.

(A): Range of prohibited use

- When an extension arm is installed, use a narrow bucket (width: 750 mm {2 ft 6 in}, 560 mm {1 ft 10 in}) without side cutters.
  If the standard bucket is used, the stability is poor, and the bucket will also hit the operator's cab when the arm is pulled in, so do not install the standard bucket.
- For operations on hard soil or rock, do not use the extension arm. The service life of the extension arm, boom, and arm will be reduced.

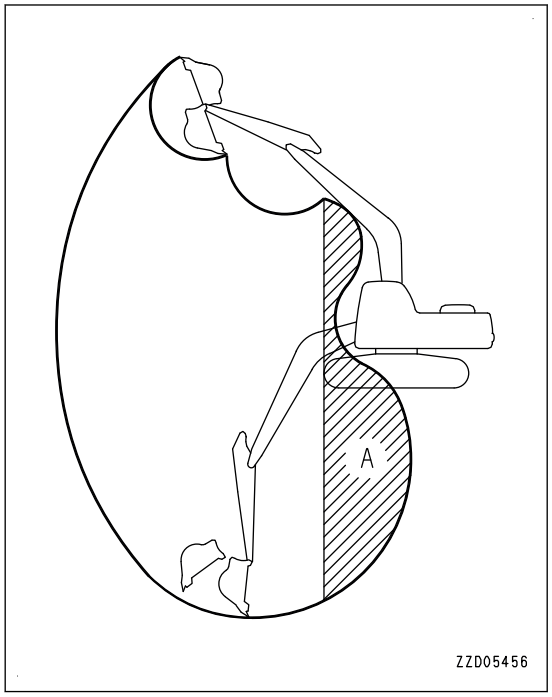

Recommended Attachment Operations

The following descriptions are the precautions which must be followed when operating the hydraulic excavator equipped with an attachment.

NOTICE

Select the optimum attachment model for the hydraulic excavator body.
The attachments and models ready for installation differ according to the machine body. For details of the selection of the attachments or the models, consult your Komatsu distributor.

Hydraulic Breaker

Applicable Work

Main applicable works of the hydraulic breaker are as follows.

- Demolition work
- Crush rocks
- Road construction

This can be used for a wide range of applications that include demolition of buildings, breaking up road surfaces or slag, tunnel work, rock crushing and breaking operations in quarries.

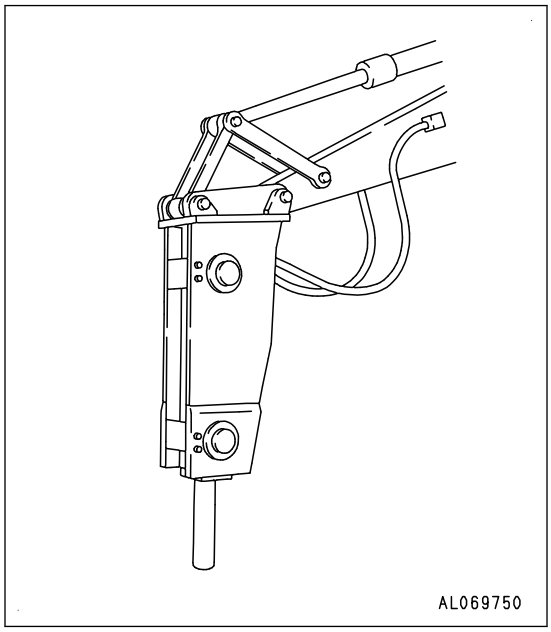

Precautions When You Do Break Operations

Do the hitting operation with the chisel to let the chisel be perpendicularly against the breaking surface.

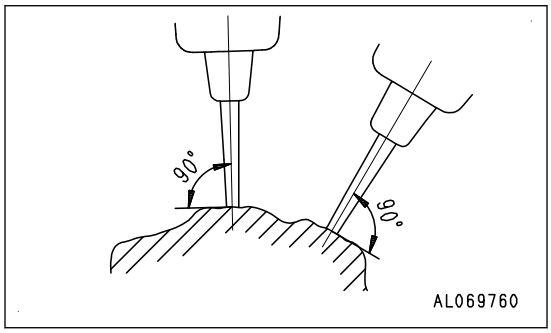

Push the chisel against the breaking surface, and make the machine be lifted approximately 5 cm {0.2 in} off the ground.

Do not make the machine be lifted off the ground more than necessary.

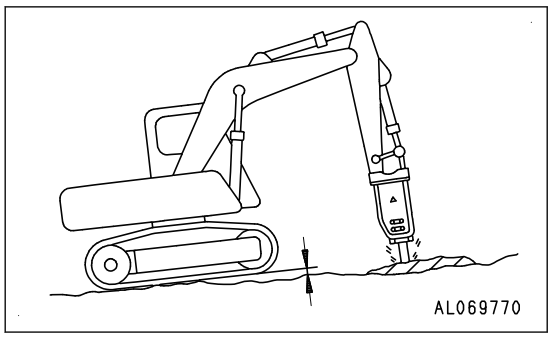

Hit the same surface continuously only 1 minute or less. When it does not penetrate or break the surface by continuous hitting to the same surface for 1 minute, change the hitting point and scrape from the edge to break the surface.

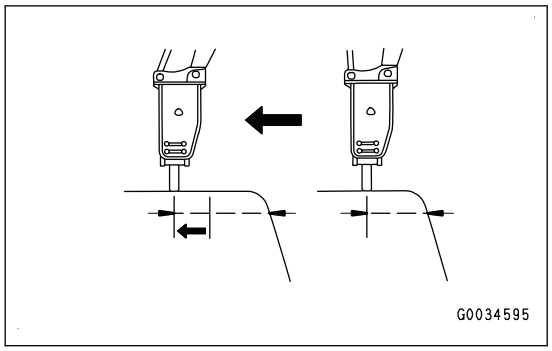

When you change the position (R) of the breaker body from the machine, the penetrating direction of the chisel gradually moves from the breaker body. Adjust the direction with the bucket cylinder to let it keep the correct direction.

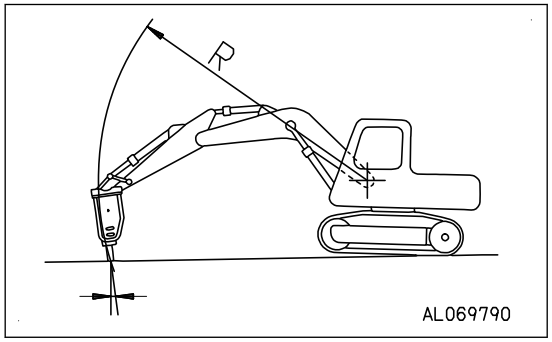

Always keep it pushed against the breaking surface correctly not to strike at the air.

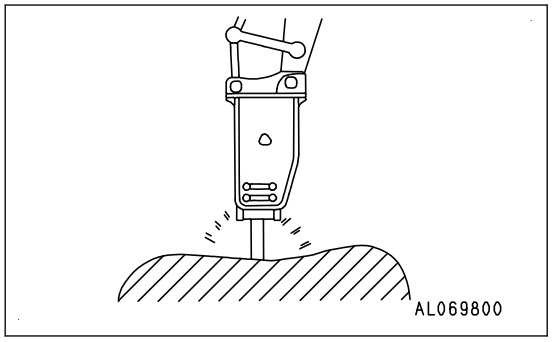

Prohibited Operations

To increase the life of machine, and for the safety, do not use the machine as follows.

Do not operate the cylinder to the stroke end. Always keep a clearance of approximately 5 cm {0.2 in}.

Do not do the scraping of rocks with the mounting part.

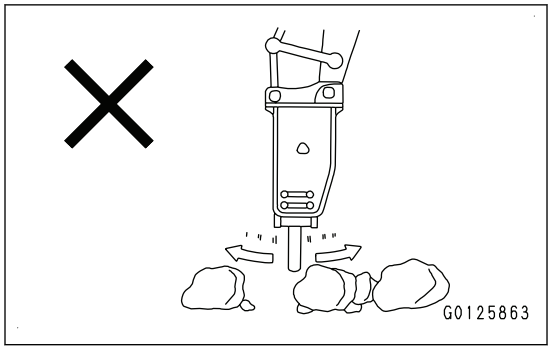

Do not do the work by swing force.

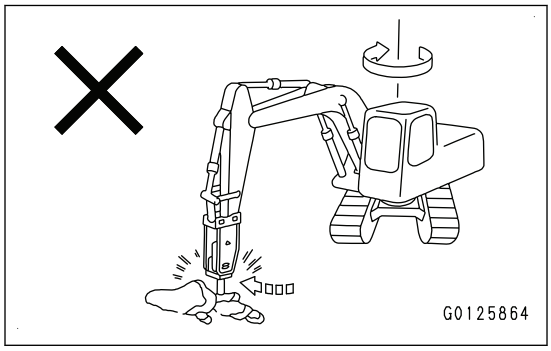

Do not move the chisel during the hitting.

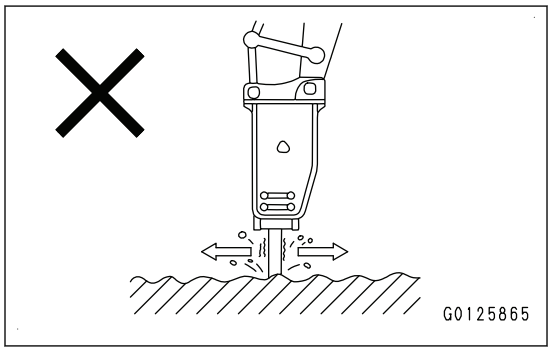

Do not hit horizontally or to the up side.

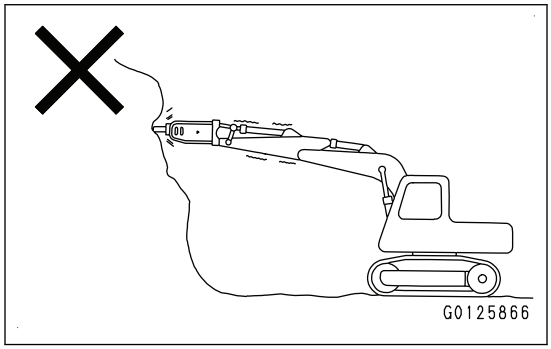

Do not do the work in water.

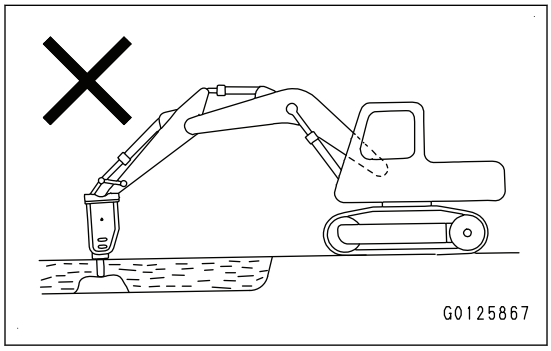

Do not twist the chisel while it is penetrated.

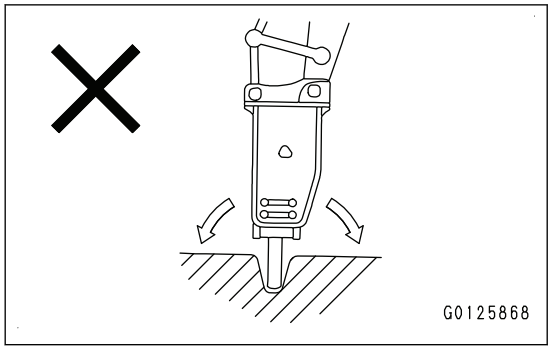

Do not do the pick work.

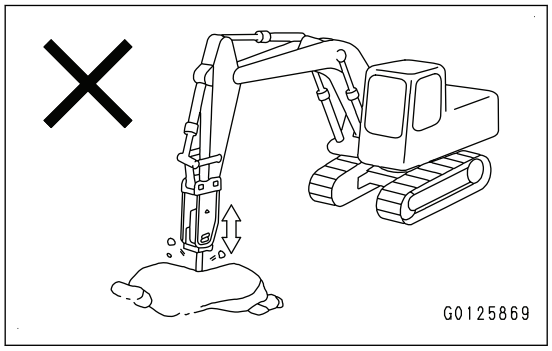

Do not extend the bucket cylinder rod fully to lift the machine off the ground. Do not do such work.

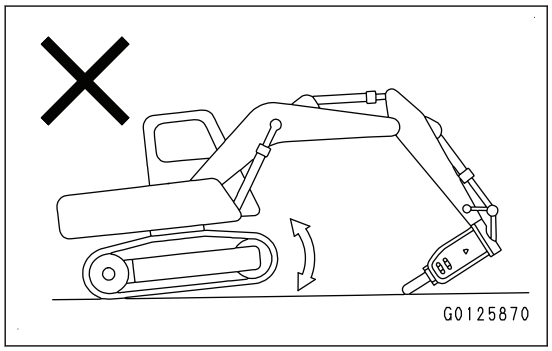

Do not do the hitting while the hydraulic cylinder is at the stroke end.

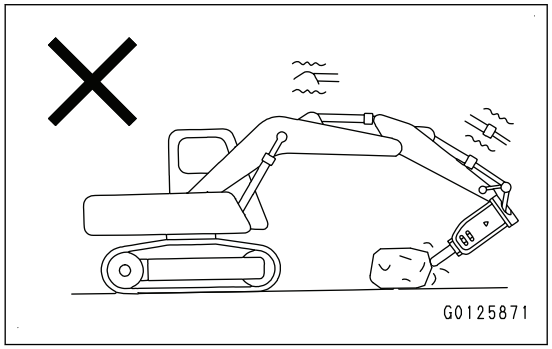

When You Supply Grease to Hydraulic Breaker, Do it in Correct Posture

NOTICE

If you lubricate the grease in an incorrect posture, the inner side of the breaker is filled with grease unnecessarily.
Dirt will go into the hydraulic circuit, and it can cause damage to the hydraulic components during the breaker operation.
Supply grease in a correct posture.

Supply grease in a correct posture as follows.

1. Lower the chisel to the ground perpendicularly.
2. Insert the grease pump perpendicularly to the lubrication point.

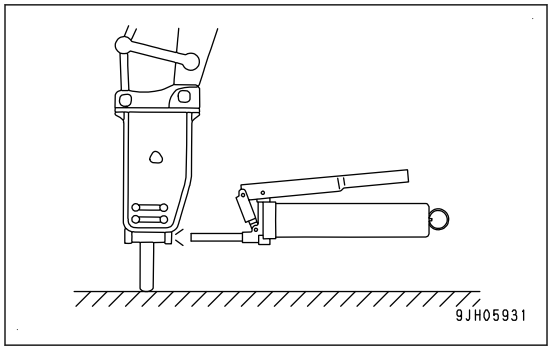

Incorrect Posture

Do not lubricate it while the hydraulic breaker is lowered to the ground.

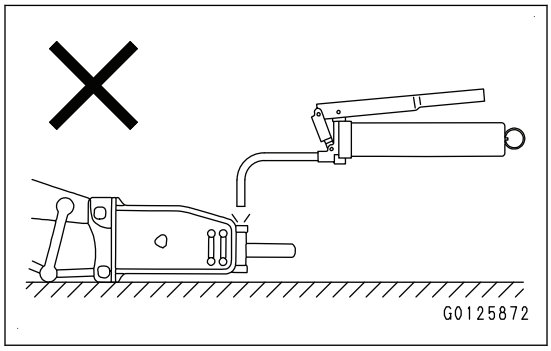

Do not lubricate it while the chisel is not lowered to the ground.

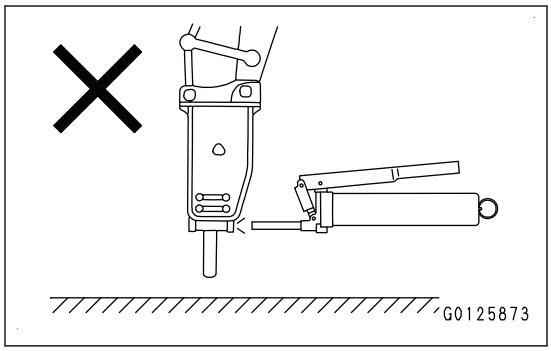

Replacement Parts

Defined Life Parts

- For using the machine safely for a long period, always perform periodic inspection of the defined life parts that have a particularly close relation to safety, such as hoses and the seat belt.
- The material of these components naturally changes over time, and repeated use causes deterioration, wear, and fatigue. As a result, there is a hazard that these components may fail and cause serious personal injury or death. Check if there is any abnormality in wear or deterioration on them before work and at the regular maintenance.
- Replace immediately the hose if any defect is found by checking. If any of the hose clamps show deterioration like deformation or cracking, replace the clamps at the same time as the hoses.
- Tighten all loose hoses and replace defective hoses, as required. When replacing hoses, always replace O-rings, gaskets, and other such parts at the same time.

Defined Life Parts List

No	Target Parts		Inspection /Replacement interval
1	Fuel system	Fuel hose Spill hose	Every 2 years or every 4000 hours, whichever comes sooner.
2	Engine lubrication system	Turbocharger lubrication hose Engine oil filter hose	Replace if any of the damages were found when the daily check or periodical maintenance.
3	Work equipment hydraulic system	Main pump delivery hose	
		External work equipment hose • Boom foot joint hose • Boom cylinder hose • Arm connection hose • Arm cylinder hose • Line hose for additional attachment	
4	Others	PPC accumulator Attachment additional accumulator	Every 2 years or every 4000 hours, whichever comes sooner.
		Seat belt	Every 3 years from start of usage or 5 years after manufacturing of seat belt, whichever comes sooner.

Consumable Parts

Replace the consumable parts such as the filters, filter elements, and air cleaner elements at the time of periodic maintenance or before they reach the wear limit.

Replace the consumable parts to keep correct operations of the machine.

Komatsu recommends the use of Komatsu genuine parts for replacement parts.

As a result of our continuous efforts to improve product quality, the part number may change. Inform your Komatsu distributor of the machine serial number and check the latest part number when ordering parts.

Consumable Parts List

Parts in parentheses are to be replaced at the same time.

Item	Part No.	Part Name	Q'ty	Replacement interval
Fuel prefilter	600-319-3610	Cartridge	1	Every 500 hours
Engine oil filter	6736-51-5142	Cartridge	1	Every 1000 hours
Fuel main filter	600-319-3750	Cartridge	1	
Hydraulic tank breather	208-60-41260	Element	1	
DEF tank breather	421-60-35170	Element	1	
DEF filter	6540-71-2320	Element	1	Every 2000 hours
Hydraulic oil filter	421-60-81141 (07000-15215)	Element (O-ring)	1 (1)	Every 3000 hours
Expansion tank cap	2A5-03-52751	Cap	1	Every 4000 hours
Air conditioner RECIRC air filter	2A5-979-1551	Filter	1	Every 1 year
Air conditioner FRESH air filter	17M-911-3530	Filter	1	
Air cleaner	2A5-01-35810	Element assembly	1	-
Additional filter for breaker (if equipped)	20Y-62-57350 (07000-12100) (07000-12011)	Element (O-ring) (O-ring)	1 (1) (1)	-
Additional pilot filter for breaker (if equipped)	20Y-62-51691 (706-76-71390)	Element (O-ring)	1 (1)	-

Other Parts

The part number can be changed for product improvement. When you make an order of the parts, tell your Komatsu distributor the machine serial number to find the latest part number.

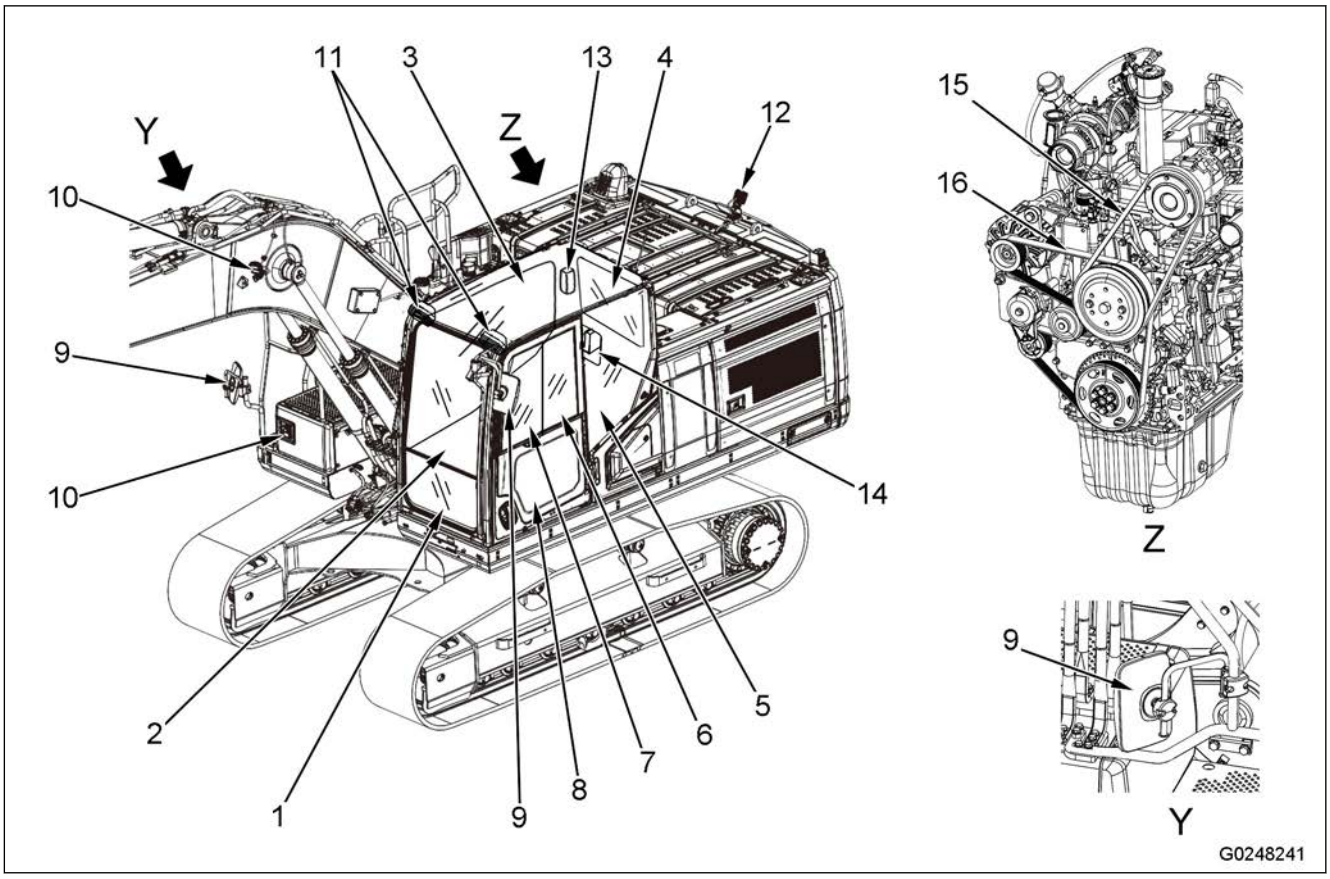

Other Parts List

NO.	Part No.	Part name	Q'ty
1	2A5-53-51360	Glass	1
2	2A5-53-51310	Glass	1
3	2A5-53-51320	Glass	1
4	2A5-53-51340	Glass	1
5	2A5-53-51330	Glass	1
6	2A5-53-51611	Glass	1
7	2A5-53-51611	Glass	1
8	2A5-53-51420	Glass	1
9	2A5-54-13421	Mirror	3
10	2A8-06-11310	Working lamp (boom × 2, deck) (LED bulb 16.8 W included)	3
11	2A8-06-11320	Working lamp (on cab) (LED bulb 16.8 W included)	2
12	2A8-06-11320	Additional working lamp (LED bulb 16.8 W included) (if equipped)	1
13	427-06-56211	Room lamp (LED bulb 1.8 W included)	1

NO.	Part No.	Part name	Q'ty
14	08041–10500	Fuse (5 A)	21
	08041–11000	Fuse (10 A)	17
	08041-11500	Fuse (15 A)	9
	08041–12000	Fuse (20 A)	13
15	04120-21750	Air conditioner compressor belt	1
16	6757-81-3310	Fan belt (for 85 A alternator)	1

Recommended Fuel, Coolant, and Lubricant

NOTICE

- **Komatsu genuine oils are conditioned to keep the reliability and durability of Komatsu construction equipment and components.**
  Obey the instructions of the Operation and Maintenance Manual to use the machine correctly for a long period.
- **Failure to obey the instructions can result in decreased service life or too much wear of the engine, power train, cooling system, and/or other components.**
- **Locally available additive agent is not recommended to use.**
- **Komatsu recommends you to use Komatsu genuine engine oil for KDPF. If engine oil other than Komatsu genuine oil for KDPF is used, it can decrease cleaning interval of KDPF filters. Deteriorated engine oil can lower the lubrication function. The machine can have decreased machine life, lower performance, or bad fuel consumption.**
- **Use correct fuels, oils, and lubricants for the ambient temperature.**
- **To operate the machine when the temperature is less than -20 °C {-4 °F}, auxiliary devices are necessary. Consult your Komatsu distributor.**

NOTICE

Be sure to use the ultra low-sulfur diesel fuel. (≤10 ppm)

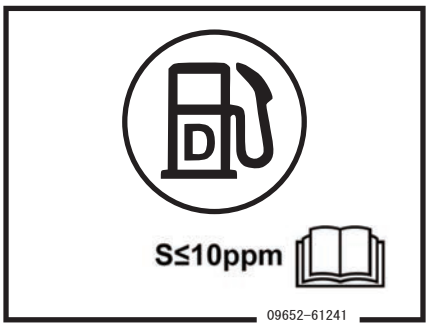

To get good fuel consumption characteristics and exhaust gas characteristics, an electronically controlled high-pressure fuel injection device and emission gas control system (KDPF) are used. The high-pressure fuel injection device requires high precision parts and good lubrication. The use of low viscosity fuel can decrease its durability. The use of fuel with high sulfur content can decrease the service life of the engine or KDPF, or cause the damage to the machine or degradation in performance.
Do not use additive agents that contain metal component.
The metal component in the additive agent will not be burned during the regeneration of the KDPF filter.
The use of additive agents can cause an abnormality in the exhaust gas aftertreatment devices.

The ASTM D975 diesel fuel can contain 5 % or less of biofuel.

The EN590 diesel fuel can contain 7 % or less of biofuel.

NOTICE

When you use biofuel other than the preceding diesel fuel and its mixing ratio is up to 20 %, obey the precautions that follow.

- **It is necessary to consult with the local regulatory authorities of engine exhaust gas regulation whether the biofuel can be used or not.**
- **The fuel can possibly leak because of the deterioration of rubber material of the fuel hose.**
  Replace it with the fuel hose applicable for biofuel. Consult your Komatsu distributor for replacement of the fuel hose.
- **Biofuel cannot be stored for a long time because it is easy to deteriorate and change in quality.**
  Use the fuel in the storage tank or the fuel tank of the machine within 6 months.
  If the deteriorated and altered biofuel is used, it can cause bad effects on the engine parts.
  When you store the machine which uses the diesel fuel mixed with the biofuel for more than 3 months, do the procedure that follows.
  - **Replace it with pure diesel fuel or the new diesel fuel mixed with the biofuel at the lowest possible mixing ratio.**
  - **After you change the fuel, run the engine for a minimum of 30 minutes before you store the machine.**
- **Because the biofuel dissolves the materials stuck to the fuel tank and fuel line, the fuel filter can be clogged with them.**
  When you change the diesel fuel to the biofuel, replace the fuel main filter cartridge and fuel prefilter cartridge with new ones. When you replace the fuel main filter cartridge and fuel prefilter cartridge, make the replacement interval half the normal time until the second replacement after you change the diesel fuel to the biofuel.
- **Because the biofuel absorbs moisture easily, it can possibly cause a growth of microorganism.**
  When the microorganism grows in the biofuel, it can cause corrosion of the fuel system and the clogging of the fuel filter.
  Drain the water from the fuel tank before you start the operation.
  When you complete the operation, fill the fuel tank to reduce the air layer.
- **If the biofuel is used in the conditions of the specific operation, the fuel can possibly get mixed into the engine oil.**
  The fuel level in the engine oil must not exceed 5 %. Deteriorated engine oil can cause unwanted effects on the engine parts such as a reduction of lubricating function. It is recommended to take a sample of the oil on a periodic basis.
- **The characteristics of the biofuel change when outside air temperature is low. The fuel filter can be clogged and the fuel inside the fuel tank can solidify. Store the biofuel in the warm building or in the storage tank.**

NOTICE

Use the paraffin-based fuel which agrees with EN15940:2016 and ASTM D975.
As long as the fuel agrees with EN15940:2016 and ASTM D975, its mixing ratio can be up to 100 %.

NOTICE

Use DEF as the aqueous urea solution for SCR system.
The DEF is a colorless transparent 32.5 % aqueous urea solution.
The quality of DEF is provided in ISO22241-1. Always use DEF that agrees with this quality standard.
In North America, use the DEF (Diesel Exhaust Fluid) which is certified by API (American Petroleum Institute). The certified DEF has the API DEF Certification Mark. Look for the mark when you purchase the DEF.

API Diesel Exhaust Fluid Certification Mark is the trade mark of API (American Petroleum Institute).

Lubrication Chart

- The lubrication chart uses the symbols to show the lubrication points and types of lubricant by each lubrication interval.
  Keep this chart in the magazine box in the cab to allow the personnel to refer to it as needed for lubrication.
- Even if the same symbol is used in the chart, the recommended genuine oil can be different by the lubrication points and the ambient temperature. For details, obey “How to Use Fuel, Coolant and Lubricants by Ambient Temperature (7-10)”.
- For the detail about lubrication, see “Maintenance Schedule (4-17)”.

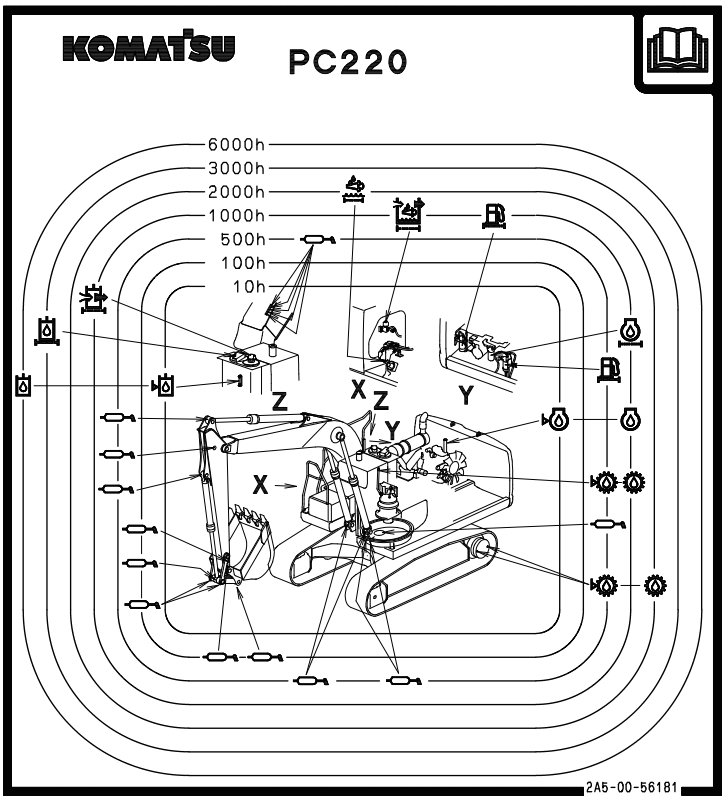

Symbol	Meaning of symbols	Symbol	Meaning of symbols
	Read the Operation and Maintenance Manual.		Supply grease
	Change engine oil		Examine oil level in engine oil pan
	Change hydraulic oil		Examine oil level in hydraulic tank
	Change power train oil		Examine power train oil level
	Replace engine oil filter		Replace hydraulic oil filter
	Replace hydraulic tank breather element		Replace fuel filter
	Replace DEF filter		Replace DEF tank breather element

How to Use Fuel, Coolant and Lubricants by Ambient Temperature

Reservoir	Fluid type	Recommended Komatsu Fluids	Ambient temperature			
			℃		℉	
			Min	Max	Min	Max
Engine oil pan	Engine oil for KDPF used in cold terrain (Oil Change interval 500 hours) (Note.1)	EOS0W40-LA (KES)	-30	40	-22	104
	Engine oil for KDPF (Oil Change interval 1000 hours)	EO10W30-LA (KES)	-20	40	-4	104
		EO15W40-LA (KES)	-15	50	5	122
Swing machinery Case Final drive case	Power train oil (Note.2)	TO30 (KES)	-30	50	-22	122
Hydraulic System	Power train oil	TO10 (KES) (Note.5)	-20	50	-4	122
	Hydraulic oil	HO56-HE (KES)	-30	50	-22	122
		HO46-HM (KES) (Note.5)	-20	50	-4	122
Grease fitting	Hyper grease (Note.3)	G2-TE (KES)	-20	50	-4	122
	Lithium EP grease	G2-LI (KES)	-20	50	-4	122
Cooling system	Non-Amine Engine Coolant AF-NAC (Note.4)	AF-NAC (KES)	-40	50	-40	122
Fuel tank	Diesel fuel	ASTM D975 No.1-D S15	-30	20	-22	68
		ASTM D975 No.2-D S15	0	50	32	122
DEF tank	DEF (Note 6)	DEF	-40	50	-40	122

KES: Komatsu Engineering Standard

ASTM: American Society for Testing and Materials

Reservoir	Specified capacity		Refill capacity	
	Liter	US gal	Liter	US gal
Engine oil pan	20	5.28	18	4.76
Swing machinery case	7.2	1.90	6.5	1.72
Final drive case (each of right and left)	4.4	1.16	4.1	1.08
Hydraulic oil system	223	58.9	119	31.4
Cooling system	32.0	8.45	28.2	7.45
Fuel tank	350	92.5	-	-
DEF tank	62.9	16.6	41	10.8

REMARK

Specified capacity means the total amount of oil including the oil in the tank and the piping. Refill capacity means the amount of oil needed to refill the system during inspection and maintenance.

Note 1: KDPF engine oil for cold district is deteriorated easily than that for normal area (replace every 1000 hours), so replace oil and filter cartridge every 500 hours. For changing maintenance time of machine monitor, ask your Komatsu distributor to perform the work.

Note 2: Power train oil has different properties from engine oil. Be sure to use the recommended oils.

Note 3: Hyper grease (G2-TE) has a high performance.

When it is necessary to improve the lubricating ability of the grease in order to prevent squeaking of pins and bushings, the use of G2-TE is recommended.

Note 4: Non-Amine Engine Coolant (AF-NAC)

1. The coolant has the function to prevent corrosion and freeze.
   Although the machine is operated in an area where freeze is not an issue, use coolant.
   Komatsu machines are supplied with Non-Amine Engine Coolant (AF-NAC). Non-Amine Engine Coolant (AF-NAC) has excellent anti-corrosion, antifreeze and cooling properties and can be used continuously for every 3 years or every 6000 hours whichever occurs first in the below listed conditions (If other coolant than Komatsu approved non-Amine (AF-NAC) is used for refill or top off, the change interval is every 2 years or every 4000 hours whichever occurs first).
   Conditions to meet every 2 years or 4000 hours to extended coolant life:
   - Must pass coolant test/analysis at 4000 hours, the test interval is a precautionary procedure intended to prevent cooling and engine system damage
   - All maintenance top offs and refills were done with Komatsu approved non-Amine (AF-NAC) coolant

   For more information (e.g. test method) on the Coolant test/Analysis, consult an authorized Komatsu Distributor.
   Non-Amine Engine Coolant (AF-NAC) is strongly recommended wherever available.
2. For the density of Non-Amine Engine Coolant (AF-NAC), see “Coolant Density Table”.
   Non-Amine Engine Coolant (AF-NAC) is supplied already diluted. In this case, fill up the tank with pre-diluted fluid (Never dilute the Non-Amine Engine Coolant with ordinary water).

Coolant Density Table

Min. atmospheric temperature	℃	-10 or more	-15	-20	-25	-30	-35	-40	-45	-50
	℉	14 or more	5	-4	-13	-22	-31	-40	-49	-58
Density (%)		30	36	41	46	50	54	58	61	64

Note 5: If this oil is used for hydraulic system, fuel consumption increases.

We strongly recommend HO56-HE for hydraulic oil.

Note 6: DEF freezes at -11 ℃ {12.2 ℉}. If thawing is necessary, DEF system is automatically heated and thawed after the engine is started.

Recommended Brands and Qualities Other Than Komatsu Genuine Oils

When using commercially available oils other than Komatsu genuine oil, consult your Komatsu distributor.

Index

Symbols

2D Boundary Control..... 3-370,3-374
2D Boundary Control During Travel.....3-377
2D Laser Setting..... 6-16
2D Machine Control..... 3-401
2D Machine Control/Payload Meter Selector Icon 3-41

A

Abbreviation List..... 1-13
Accumulator.....6-21
Action Level Display.....3-18
Activate Payload Meter Function..... 3-437
Add Guest ID..... 3-109
Additional Filter for Breaker..... 6-20
Additional Lamp Switch.....3-133
Adjust Auto Tilt Bucket Control..... 3-80
Adjust Bucket Clearance.....4-37
Adjustable Priority.....3-71
Adjustment.....3-70
After Cold Weather Season..... 3-543
Aftertreatment Device Regeneration.....3-88
Aftertreatment Device Regeneration Disable Indicator 3-38
Aftertreatment Device Regeneration Indicator.....3-38
Air Cleaner Clogging Caution Lamp..... 3-28
Air Conditioner Button.....3-330
Air Conditioner Icon..... 3-43
Air Conditioner Menu..... 3-326
Air Conditioner System Caution Lamp.....3-28
Air Conditioner Warm-up Operation.....3-250
Airflow Control Display.....3-328
Allowable Depth of Water, Soil and Dirt..... 3-279
Appoint Leader When Working with Others.....2-45
Assistance Work at Loading..... 3-457
Attachment Advanced Setting.....3-305
Attachment Angle Hold Control.....3-409
Attachment Icon.....3-41
Attachment Lock System..... 6-12
Attachment Setting.....3-300
Attachment to Be Set.....3-301
Attachments and Options.....6-41
Audio Icon.....3-43
Audio Setting.....3-339
Auto Boom Down.....3-410
Auto Button..... 3-330
Auto Idle Stop Function.....3-273
Auto Idle Stop Time Setting..... 3-65
Auto Power Off.....3-15
Auto Power Off Time Setting.....3-66
Auto-Deceleration Function..... 3-272
Auto-Deceleration Icon..... 3-42

B

Backhoe Work.....3-283
Basic Operation of Machine Monitor.....3-8,3-10
Basic Operation of Machine Monitor When Lock Lever is Released.....3-16
Basic Operation of Machine Monitor When You Start Engine in Normal Situation..... 3-10
Basic Operation of Machine Monitor When You Start Engine While Engine Shutdown Secondary Switch is on.....3-13
Basic Operation of Machine Monitor When You Stop Engine in Normal Situation..... 3-14
Battery.....3-542
Battery Disconnect Switch.....3-169,3-170
Battery Terminal.....4-13
Beware of Asbestos Dust.....2-28
Bio-Fuel.....4-6
Bird's Eye View Icon..... 3-44
Bleed Air from Fuel Circuit.....3-546
Bluetooth® Connection Setting.....3-341
Brightness Adjustment.....3-95
Brightness Setting of ICT Monitor (Payload Application).....3-497
Bucket Teeth Selection..... 6-46

C

Cab Equipment Name.....3-4
Cab Interference Prevention.....3-389
Cab Interference Prevention Setting.....3-64
Calendar Setting..... 3-99
Calibration State Caution Lamp.....3-32
Camera Position at Startup.....3-102
Camera System Caution Lamp.....3-31
Cap and Cover with Lock.....3-162
Caution Lamp List.....3-19
Change 12H/24H Display Mode..... 3-101
Change Application.....3-447
Change Display Setting..... 3-55
Change Display/Non-Display of ECO Gauge..... 3-56
Change Display/Non-Display of ECO Guidance Display at Key OFF.....3-57
Change in Weight Adjustment..... 3-305
Change over Hydraulic Circuit..... 6-25
Change Reference Point.....3-409
Change Shape Adjustment.....3-306
Change to Semi-Auto Mode.....3-419
Charge Level Caution Lamp..... 3-28
Check Points Before You Use 2-Way General Attachment.....6-34
Check Points Before You Use Breaker..... 6-33
Check Signs and Signalman's Signals..... 2-28
Checks and Adjustment Before You Start Engine..... 2-30,3-201
Checks Before Operation.....2-32

Clean Air Conditioner Fresh/Recirc Filters.....4-50
Clean CAB Floor.....4-43
Clean Inside of Cooling System.....4-26
Clear Payload Record by 1 Truck or by 1 Material.....
.....3-471
Clock..... 3-115
Clock Adjustment.....3-99
Cold Weather Operation..... 3-541
Cold Weather Operation Information..... 3-541
Compaction Control..... 3-410
Component Names of 2D Laser Catcher.....6-15
Connect Hydraulic Circuit of Attachment..... 6-22
Consumable Parts..... 7-3
Consumable Parts List.....7-3
Contents of Safety Labels.....2-5
Control Levers and Pedals.....3-143
Control Patterns Other Than Standard Control Pattern.....3-525
Control Pedal..... 6-19
Controls and Gauges Names.....3-5
Coolant.....3-541
Coolant and Water for Dilution.....4-8
Cooperation with Smart Construction Fleet (ICT Monitor).....3-513
Cup Holder.....3-163
Current Abnormality.....3-90
Cylinder Function State Caution Lamp..... 3-33

D

Daylight Saving Time (Summer Time) Setting.... 3-101
DEF.....3-541,4-9
DEF Filter.....3-199
DEF Level Caution Lamp.....3-25
DEF Level Gauge..... 3-50
DEF System Caution Lamp..... 3-25
DEF System High Temperature Stop Caution Lamp....
.....3-26
Defined Life Parts..... 7-2
Defined Life Parts List.....7-2
Delayed Engine Shutdown Setting..... 3-65
Delayed Engine Shutdown System.....3-252
Delete Operation Record of Payload Meter Work.....
.....3-508
Digging Work..... 3-283
Directions of Machine..... 1-9
Display of Calibration Records.....3-493
Display of Lock Status and Attachment Engagement Status.....6-13
Display of Machine Monitor.....3-403
Display Warning Tag During Inspection and Maintenance.....2-44
Ditching Work.....3-283
Do Measurement and Register Payload...3-439,3-451
Do Not Disassemble Idler Cushion.....2-55
Do Not Get Caught in Work Equipment.....2-21
Do Not Go Close to High-Voltage Cables.....2-27
Do Not Select Truck and Start Measurement.....
.....3-439,3-449
Do Not Use the Swing Force to Hit and Give Shocks to the Object..... 3-274
Do Not Work If Foreign Material is Accumulated Around Hydraulic Cylinder.....3-275
Drink Box..... 3-162

E

Each Operator Setting..... 3-298
ECO Gauge.....3-116
ECO Guidance.....3-118
Economy Mode Adjustment.....3-72
Effective Use of Hydraulic Excavator.....3-284
Electrical Components.....4-14
Elevation Adjust Range.....3-410
Emergency Escape Hammer.....3-161
Emergency Exit from Operator's Cab..... 2-21
Emergency Stop Caution Lamp.....3-35
End Screen When There is Message..... 3-15
Energy Saving Guidance..... 3-53
Engine Coolant Temperature Caution Lamp.....3-22
Engine Coolant Temperature Gauge..... 3-48
Engine Oil Level Caution Lamp..... 3-27
Engine Oil Pressure Caution Lamp.....3-27
Engine Overrun Caution Lamp..... 3-31
Engine Shutdown Secondary Switch.....3-142
Engine Stop Indicator.....3-37
Engine System Caution Lamp..... 3-26
Engine Technology to Conform Exhaust Gas Emission..... 1-10
Engine Warm-up Operation..... 3-239
Error by Failure in the Electrical Component..... 3-523
Error of Precision..... 3-433
Error of Semi-Auto Mode..... 3-431
Error When Message for ICT Monitor is Not Shown....
.....3-524
Escape from Soft Ground..... 3-282
Every 10 Hours Before Initial 50 Hours Maintenance or Daily Maintenance.....4-20
Every 100 Hours Maintenance or Weekly Maintenance.....4-52
Every 1000 Hours Maintenance.....4-73
Every 2000 Hours Maintenance.....4-82
Every 250 Hours Maintenance or Monthly Maintenance.....4-53
Every 3000 Hours Maintenance.....4-89
Every 4000 Hours Maintenance.....4-92
Every 4500 Hours Maintenance.....4-97
Every 500 Hours Maintenance.....4-56
Every 6 Months Maintenance..... 4-103
Every 6000 Hours Maintenance.....4-100
Every 8000 Hours Maintenance.....4-102
Every 9000 Hours Maintenance.....4-102
Examine and Replace Vacuator Valve.....4-25
Examine Before You Start Operation.....4-51
Examine ECO Guidance Record..... 3-53

Examine Function of Accumulator..... 4-84
Examine Jobsite Conditions.....2-26
Examine Refrigerant Level of Air Conditioner (Gas).... 4-41
Examine Starting Condition and Unusual Noise of Engine..... 3-237
Explanation of Air Conditioner Components..... 3-326
Explanation of Components.....3-8
Explanation of Components on Machines with Attachment.....6-18
Explanation of Function of Semi-Auto Mode.....3-423
Extension Arm Setting..... 3-67

F

Fan Control System Caution Lamp.....3-32
Filter.....4-13
Fire Extinguisher.....3-169
For Safety Operation.....2-16
Foreword.....1-7
Fresh/Recirc Air Changeover Setting Display.....3-330
Fuel.....4-6
Fuel and Lubricants..... 3-541
Fuel Consumption Gauge..... 3-116
Fuel Control Dial..... 3-131
Fuel Gauge..... 3-50
Fuel Level Caution Lamp.....3-23
Function of Cab Interference Prevention..... 3-390
Function of Object Avoidance..... 3-362
Function of PPC Circuit Accumulator.....4-83
Fuse.....3-164
Fusible Link.....3-168

G

General Character and Precautions for Handling. 2-58
General Precautions Common to Operation and Maintenance..... 2-16
General View..... 3-2
GNSS Integration Setting.....3-99
Grease..... 4-9
Grease Pump Holder..... 3-168
Guidance Sound..... 3-410
Guidance Sound Setting.....3-492
Guidance Sound Setting of ICT Monitor (Payload Application)..... 3-499

H

Handle Accumulator and Gas Spring.....2-56
Handle Air Conditioner.....3-325
Handle Battery..... 2-51
Handle Bucket with Hook.....6-17
Handle Coolant..... 2-56
Handle Extension Arm..... 6-48
Handle High-Pressure Hoses and Piping..... 2-54
Handle Komatsu Diesel Particulate Filter (KDPF)..... 3-172
Handle KomVision..... 3-345
Handle Laser Catcher.....6-15
Handle Machine Ready for Installation of Attachment. 6-18
Handle Oil, Fuel, Coolant, and Do Oil Clinic.....4-5
Handle Operator ID.....3-298
Handle Quick Coupler.....6-5
Handle Radio Sound System.....3-334
Handle Rubber Pad Shoes and Road Liners.....6-44
Handle Trapezoidal Bucket.....6-47
Handle Urea SCR System Warning.....3-183
Handle Working Mode..... 3-271
Horizontal Pin Type Tooth.....6-46
Horn Switch.....3-137
How to Add DEF from BIB Container.....3-213
How to Adjust.....3-217
How to Adjust Air Conditioner Compressor Belt... 4-71
How to Adjust Armrest Angle..... 3-219
How to Adjust Armrest Height.....3-219
How to Adjust Auto Tilt Bucket Control..... 3-81
How to Adjust Console Height..... 3-219
How to Adjust Drain Valve of Water Separator... 3-204
How to Adjust Flip-up of Lock Lever and Console..... 3-220
How to Adjust Headrest in Vertical Direction..... 3-218
How to Adjust ICT Monitor Position..... 3-126
How to Adjust Mirrors.....3-222
How to Adjust Operator Seat..... 3-217
How to Adjust Payload Weight Value.....3-78
How to Adjust Seat Cushion in Fore-After Direction.... 3-218
How to Adjust Seat Fore-and-Aft Direction..... 3-217
How to Adjust Seat Unit in Fore-and-Aft Direction..... 3-220
How to Adjust Suspension Seat Hardness..... 3-220
How to Bleed Air from Attachment.....4-49
How to Bleed Air from Cylinder.....4-47
How to Bleed Air from Hydraulic Circuit.....4-47
How to Bleed Air from Pump.....4-47
How to Bleed Air from Swing Motor.....4-48
How to Bleed Air from Travel Motor.....4-48
How to Cancel Automatic Engine Warm-up Operation 3-240
How to Cancel Cooperation with Smart Construction Fleet.....3-516
How to Cancel Machine Warm-up..... 3-243
How to Change Attachment.....3-302
How to Change Lever Switch Assignment Setting3-60
How to Change Oil in Engine Oil Pan and Replace Engine Oil Filter Cartridge..... 4-73
How to Change Oil in Final Drive Case..... 4-82
How to Change Oil in Hydraulic Tank..... 4-100
How to Change Oil in Swing Machinery Case..... 4-74
How to Change Piping to Be Used..... 3-80
How to Change Travel Speed.....3-267
How to Change-over and Connect Hydraulic Circuit for Machine Ready for Installation of Attachment. 6-22
How to Clean Air Cleaner Outer Element..... 4-21

How to Clean Air Conditioner Fresh/Recirc Filters.....4-65
How to Clean DEF Tank.....4-97
How to Clean Fresh Air Filter.....4-65
How to Clean Hydraulic Tank Strainer.....4-91
How to Clean Inside of Cooling System.....4-27
How to Clean KDPF.....4-102
How to Clean Recirculation Air Filter.....4-65
How to Clean Washable Floor Mat.....4-42
How to Clear Payload Record.....3-459
How to Collect Coolant.....4-12
How to Collect Oil with Sampling Valve.....4-11
How to Cooperate with Smart Construction Fleet.....3-513
How to Decrease Track Tension.....4-32
How to Delete Payload History on ICT Monitor..3-466
How to Delete Payload History on Machine Monitor.....3-459
How to Disable 2D Boundary Control.....3-388
How to Do Hydraulic System Warm-up Operation.....3-241
How to Do Manual Preheating When You Start Engine.....3-235
How to Do Tilt Speed Fine Adjustment.....3-87
How to Drain Water and Sediment from Fuel Tank.....3-203
How to Edit Attachment Setting.....3-303
How to Escape When Track on One Side is Stuck.....3-282
How to Escape When Tracks on Two Sides are Stuck.....3-282
How to Examine After You Finish Work.....3-290
How to Examine Air Cleaner.....4-20
How to Examine Air Conditioner Compressor Belt.....4-71
How to Examine All Tightening Points of Engine Intake Pipe Clamps.....4-78
How to Examine Alternator.....4-86
How to Examine Anchor Point for Tie-off.....4-103
How to Examine and Adjust Air Conditioner Compressor Belt Tension.....4-71
How to Examine and Adjust Engine Valve Clearance..4-86
How to Examine and Adjust Track Tension.....4-31
How to Examine and Clean Cylinder Stroke Sensor Case Bolt.....4-69
How to Examine and Clean Radiator Fins, Oil Cooler Fins, Aftercooler Fins and Air Conditioner Condenser Fins.....4-62
How to Examine and Do Maintenance Air Conditioner.....4-41
How to Examine and Release Nitrogen Gas Charge Pressure in Accumulator (For Breaker).....4-78
How to Examine Battery and Indicator of Komatsu Maintenance-Free Battery.....4-69
How to Examine Battery Electrolyte Level.....4-53
How to Examine Before You Start Operation.....3-203
How to Examine Camera Visibility.....4-49
How to Examine Coolant Level and Add Coolant.....3-206
How to Examine DEF Level and Add DEF.....3-210
How to Examine Electric Wiring.....3-209
How to Examine Electrolyte Level from Side of Battery.....4-54
How to Examine Electrolyte Level When It is Not Possible to Examine from Side of Battery.....4-55
How to Examine Electrolyte Level When It is Possible to Use Indicator to Examine Electrolyte Level.....4-55
How to Examine Exhaust Pipe Cover.....4-96
How to Examine Fan Belt Tension and Auto-Tensioner and Replace Auto-Tensioner.....4-81
How to Examine for Looseness of Engine High-Pressure Piping Clamp, Hardening of Rubber.....4-93
How to Examine for Looseness of Work Equipment Wiring Clamp, Hardening of Rubber.....4-69
How to Examine for Missing Fuel Spray Prevention Cap, Hardening of Rubber.....4-94
How to Examine Fuel Level and Add Fuel.....3-209
How to Examine Function of Accumulator for Control Circuit and Release Internal Pressure in Hydraulic Circuit.....4-83
How to Examine Gas Spring.....4-46
How to Examine Horn.....3-216
How to Examine Looseness and Tighten Track Shoes Bolts.....4-31
How to Examine Low-Speed Run and Acceleration of Engine.....3-238
How to Examine Object Avoidance.....3-216
How to Examine Oil Level in Engine Oil Pan, Add Oil.....3-208
How to Examine Oil Level in Final Drive Case, Add Oil.....4-68
How to Examine Oil Level in Hydraulic Tank, Add Oil..3-205
How to Examine Oil Level in Swing Machinery Case, Add Oil.....4-67
How to Examine Oil Sump in Flywheel Housing...4-75
How to Examine Operation of Air Conditioner Compressor.....4-93
How to Examine Roadliners.....6-45
How to Examine Starting Motor.....4-92
How to Examine Swing Pinion Grease Level, Add Grease.....4-61
How to Examine Version of Radio.....3-343
How to Examine Water Pump.....4-92
How to Examine Water Separator, Drain Water and Sediment.....3-203
How to Examine Window Washer Fluid Level, Add Fluid.....4-38
How to Examine Wiper Blade.....4-39
How to Examine Working Lamp.....3-215
How to Examine, Clean and Replace Air Cleaner 4-20
How to Export Operation Record of Payload Meter Work.....3-511
How to Fasten and Unfasten Seat Belt.....3-230

How to Fasten Seat Belt..... 3-230
How to Handle Object Avoidance..... 3-361
How to Increase Track Tension.....4-32
How to Install Attachment..... 6-28
How to Install Headrest.....3-221
How to Install ICT Monitor.....3-124
How to Install Mirror.....3-535
How to Invert Bucket.....3-286
How to Lift Machine..... 3-539
How to Listen AM/FM Radio..... 3-335
How to Lubricate.....4-56
How to Lubricate Roller at Cab Front Window.....4-50
How to Lubricate Swing Circle.....4-61
How to Lubricate Work Equipment..... 4-52
How to Measure Bucket Foot Angle and Contour Point of Standard Bucket.....3-309
How to Measure Bucket Foot Angle and Contour Point of Tilt Bucket.....3-314
How to Measure Foot Angle and Contour Point. 3-324
How to Open and Close Cap with Lock..... 3-292
How to Open and Close Ceiling Window.....3-148
How to Open and Close Cover with Lock..... 3-292
How to Open and Close DEF Tank Filler Port Cover... 3-295
How to Open and Close Engine Hood.....3-293
How to Open and Close Operator Cab Door Lock..... 3-297
How to Operate 2-Way General Attachment.....6-33
How to Operate Air Conditioner.....3-331
How to Operate Engine in Break-in Period.....3-238
How to Operate Machine After Warm-up Operation.... 3-250
How to Operate Work Equipment..... 3-269
How to Operate Work Mode..... 3-271
How to Park Machine.....3-288
How to Play Music with Bluetooth® Connected..3-336
How to Recline Seat..... 3-217
How to Release Internal Pressure in Hydraulic Circuit 4-85
How to Remove and Install Attachment.....6-25
How to Remove and Install Battery.....3-550
How to Remove and Install Headrest..... 3-221
How to Remove and Install Mirror.....3-534
How to Remove Attachment..... 6-25
How to Remove Headrest.....3-221
How to Remove ICT Monitor.....3-122
How to Remove Mirror.....3-534
How to Replace Accumulator (For Control Circuit)..... 4-92
How to Replace Additional Filter Element for Breaker. 6-38
How to Replace Additional Pilot Filter Element for Breaker..... 6-39
How to Replace Air Cleaner Element..... 4-24
How to Replace and Invert Bucket.....3-285
How to Replace Bucket.....3-285
How to Replace DEF Filter..... 4-86
How to Replace DEF Hose.....4-102
How to Replace DEF Tank Breather Element.....4-80
How to Replace DEF Tank Filler Port Filter..... 4-97
How to Replace Front Window Wiper Blade.....4-39
How to Replace Fuel Main Filter Cartridge.....4-76
How to Replace Fuel Prefilter Cartridge..... 4-58
How to Replace Fuel Spray Prevention Cap..... 4-102
How to Replace Hydraulic Oil Filter Element.....4-89
How to Replace Hydraulic Tank Breather Element..... 4-79
How to Replace Lower Window Wiper Blade..... 4-40
How to Replace Roadliners..... 6-45
How to Secure Machine.....3-532
How to Select Teeth.....6-46
How to Set "Swing to Angle".....3-400
How to Set 2D Boundary Control.....3-378
How to Set 2D Boundary Control (Front Wall).... 3-380
How to Set 2D Boundary Control (Left Swing Angle Limit, Right Swing Angle Limit)..... 3-387
How to Set 2D Boundary Control (Left Wall).....3-383
How to Set 2D Boundary Control (Lower Wall)...3-381
How to Set 2D Boundary Control (Right Wall).... 3-385
How to Set 2D Boundary Control (Upper Wall)...3-379
How to Set Cab Interference Prevention..... 3-393
How to Set Dimensions of Extension Arm..... 3-68
How to Set Object Avoidance..... 3-367
How to Set Proximity Truck.....3-519
How to Set Rollover Avoidance..... 3-47
How to Set Travel Heading Indicator..... 3-44
How to Start Engine.....3-233,3-553,4-47
How to Start ICT Monitor..... 3-128
How to Start Machine (Travel FORWARD and REVERSE) and Stop Machine..... 3-255
How to Start Machine (Travel Forward and Reverse) and Stop Machine When You Use Track Control.. 3-262
How to Start Machine After Long-Term Storage. 3-545
How to Steer Machine.....3-268
How to Steer Machine (Change Direction)..... 3-259
How to Steer Machine (Change Direction) When You Use Track Control.....3-265
How to Stop Engine..... 3-251
How to Stop Machine.....3-258
How to Stop Machine When You Use Track Control.... 3-265
How to Switch to Manual Mode..... 3-422
How to Temporarily Disable 2D Boundary Control..... 3-377
How to Temporarily Disable Control of "Swing to Angle".....3-399
How to Temporarily Disable Control of Cab Interference Prevention.....3-392
How to Temporarily Turn off Semi-Auto Mode Control. 3-422
How to Tilt Machine.....4-45
How to Tilt Seat.....3-218
How to Travel FORWARD.....3-256
How to Travel Forward When You Use Track Control.. 3-263

How to Travel REVERSE.....3-257
How to Travel Reverse When You Use Track Control. 3-264
How to Unfasten Seat Belt.....3-230
How to Update Truck Information..... 3-517
How to Use 2D Machine Control.....3-401
How to Use a Slope..... 4-45
How to Use Ceiling Window Roller Shades.....3-156
How to Use Door Lock.....3-162
How to Use Front Roller Shades..... 3-155
How to Use Fuel, Coolant and Lubricants by Ambient Temperature.....7-10
How to Use One-Touch Power Maximizing Function... 3-272
How to Use Payload Meter Function..... 3-434
How to Use Payload Meter Function (ICT Monitor)..... 3-447
How to Use Payload Meter Function (Machine Monitor)..... 3-437
How to Use Rear Roller Shades.....3-158
How to Use Remote Courtesy Lights Function When You Get off Machine..... 3-369
How to Use Remote Courtesy Lights Function When You Get on Machine..... 3-368
How to Use Side Roller Shades.....3-159
How to Use Telephone.....3-337
How to Use Track Control.....3-261
Hydraulic Breaker..... 6-49
Hydraulic Oil Filter Clogging Caution Lamp.....3-34
Hydraulic Oil Temperature Caution Lamp.....3-22
Hydraulic Oil Temperature Gauge.....3-49
Hydraulic System Caution Lamp.....3-23

I

ICT Monitor..... 3-121
ICT Monitor Display..... 3-444
If Engine Does Not Start..... 4-78
If Machine Monitor Shows Warning Display.....3-560
IMU State Caution Lamp.....3-35
In Cold Weather.....2-31
Indicator Display..... 3-36
Information Switch..... 3-134
Inspect Machine.....2-16
Inspection and Maintenance Items..... 4-41
Installation Setting.....6-6
Intelligent Machine Control Equipment State Caution Lamp.....3-34
Intelligent Machine Control System State Caution Lamp.....3-35
Introduction..... 1-9

J

Joystick Pattern Selection.....3-63

K

KDPF Soot Accumulation Caution Lamp.....3-24
KDPF System Caution Lamp.....3-24
Keep Machine Clean.....2-17
Keep Work Place Clean and Tidy..... 2-44
KOMTRAX..... 3-200
KOWA (Komatsu Oil Wear Analysis)..... 4-10

L

Lamp Switch..... 3-132
Language Setting of ICT Monitor (Payload Application).....3-503
Language Settings.....3-101
Large Attachments and Combinations.....2-25
Laser Benchmark.....3-411
Level Indicator.....3-117
Lever Switch Assignment.....3-58
Lifting Operation by Using Bucket with Hook.....2-43
Limp Mode Switch.....3-141
Load onto and Unload from a Trailer..... 3-527
Loading Work.....3-284
Location of Engine Number Plate..... 1-11
Location of Product Identification Number (PIN)/ Machine Serial No. Plate.....1-11
Location of Safety Labels.....2-3
Lock..... 3-291
Lock Lever..... 3-144
Lock Lever Automatic Lock Cancel Switch.....3-140
Lock Lever Automatic Lock Cancel Switch Indicator... 3-37
Lock Lever Indicator.....3-37
Lock Pin..... 6-20
Log Off.....3-113
Long-Life Tooth..... 6-46
Long-Term Storage..... 6-35
Lubrication Chart.....7-9

M

Machine Control Function During Travel.....3-421
Machine Control Setting.....3-406
Machine Equipment Name.....3-2
Machine Information.....1-11
Machine Monitor Display..... 3-346,3-435
Machine Monitor Equipment..... 3-8
Machine Operations and Controls..... 3-201
Machine Setting..... 3-57
Machine Warm-up Setting.....3-66
Machine Warm-up System.....3-242
Magazine Box..... 3-163
Main Application of Machine..... 1-9
Maintenance..... 3-88
Maintenance During Long-Term Storage.....3-544
Maintenance Interval for Hydraulic Breaker.....4-19
Maintenance Item Screen Setting.....3-91
Maintenance of Additional Filter for Breaker.....6-36
Maintenance Procedure.....4-20
Maintenance Record Check.....3-92
Maintenance Schedule..... 4-17

Maintenance Schedule Table....4-17
Maintenance Time Caution Lamp....3-29
Make Sure of Good Visibility....2-27
Manual Machine Warm-up Operation....3-244
Material Information....3-483
Measure Again at Loading....3-458
Message Display....3-114
Meter Display....3-48
Method for Selecting Window Washer Fluid....2-57
Monitor Brightness Selector Switch....3-133
Monitor Display....3-361
Monitor Display of "Swing to Angle"....3-395
Monitor Display of 2D Boundary Control....3-375
Monitor Display of Cab Interference Prevention. 3-392
Monitor Display of Object Avoidance....3-365
Monitoring....3-93
Mute Switch....3-136

N

Names of Machine Monitor Equipment....3-7
No Jumping on or off Machine....2-20
No People on Attachments....2-20
NOx Control Device System Caution Lamp....3-32

O

Object Avoidance....3-350
Object Avoidance Test....3-89
OFF Button....3-331
Oil....4-5
Oil and Fuel Storage....4-13
Only Authorized Personnel....2-44
Open and Close CAB Front Window....3-149
Operate Attachment....6-32
Operate Breaker....6-32
Operation of Cab Interference Prevention....3-391
Operation Record of Payload Meter Work....3-507
Operation to Change Direction of Machine to Right or Left During Forward Travel (Track Control in Use)....3-266
Operation to Change Direction of Machine Which is Moving Forward....3-260
Operation to Change Direction of Stopped Machine....3-259
Operation to Do Counter-Rotation Turn on Site..3-260
Operation to Do Counter-Rotation Turn on Site (Track Control in Use)....3-265
Operations and Checks After You Start Engine..3-237
Operations and Checks Before You Start Engine....3-231
Operator and Monitor Setting....3-93
Operator Authentication Setting....3-103
Operator ID Management....3-104
Operator ID Setting....3-104
Other Equipment....3-148
Other Guidance....3-120
Other Parts....7-4
Other Precautions....2-58
Other Setting....3-490
Other Settings (ICT Monitor)....3-494
Other Settings (Machine Monitor)....3-490
Other Trouble....3-554
Others....3-115
Outline of Maintenance....4-5
Overload at Loading....3-456

P

Pairing....3-342
Paraffin-based Fuel....4-8
Payload Meter Calibration....3-73
Payload Meter Function....3-434
Payload Offset....3-78
Pedal Operation and Oil Flow of Machines to Which Attachment is Installed....6-24
Periodic Inspection of Defined Life Parts....2-57
Pilot Display....3-41
Power Maximizing Indicator....3-39
Power Supply for KOMTRAX....3-200
Power Supply Outlet....3-163
Precautions After Daily Work Ends in Cold Weather....3-543
Precautions Before Starting Inspection and Maintenance....2-44
Precautions Before Starting Operation....2-16
Precautions for Air Conditioner Maintenance....2-56
Precautions for CAB Glass....2-25
Precautions for Check and Maintenance....2-51
Precautions for Compressed Air....2-56
Precautions for DEF....2-58
Precautions for Fire Hazard and Leakage....2-58
Precautions for High Speed Travel....3-279
Precautions for High Voltage....2-54
Precautions for High-Pressure Fuel....2-54
Precautions for High-Pressure Grease When Adjusting Track Tension....2-55
Precautions for High-Pressure Oil....2-53
Precautions for High-Temperature Coolant....2-53
Precautions for High-Temperature Oil....2-53
Precautions for High-Temperature Parts....2-53
Precautions for ICT Monitor....2-29
Precautions for Inside Operator's Compartment...2-17
Precautions for Jobsite....2-26
Precautions for Lifting Operations....2-43,6-17
Precautions for Long-Term Storage....3-544
Precautions for Maintenance....2-44,4-2
Precautions for Noise....2-54
Precautions for Operation....2-26,2-32,3-278,3-413
Precautions for Safety-related Equipment....2-16
Precautions for Severe Work Condition....3-548
Precautions for Storage....2-58
Precautions for Towing and Being Towed....2-42
Precautions for Transportation....2-41
Precautions for Welding....2-51
Precautions for Working at High Places....2-46

Precautions Related to Attachments and Options 2-24
Precautions Related to Protective Structures..... 2-22
Precautions to Prevent Fire..... 2-18
Precautions When Getting on or off Machine..... 2-20
Precautions When Installing, Removing, or Storing Attachments.....2-46
Precautions When Machine Travels..... 3-279
Precautions When Operating on Slopes.....2-36
Precautions When Operating on Snow or Frozen Surfaces..... 2-39
Precautions When Starting Engine.....2-31
Precautions When Traveling in Forward or Reverse and Swinging..... 2-33
Precautions When Using Hammer.....2-52
Precautions When Working on Loose Ground.....2-26
Precautions When You Add..... 2-58
Precautions When You Charge Battery..... 3-551
Precautions When You Discard Waste Materials..2-57
Precautions When You Load and Unload..... 2-41
Precautions When You Move Away from Operator Seat..... 2-21
Precautions When You Operate Engine Inside Building.....2-25
Precautions When You Operate Machine.....2-37
Precautions When You Park Machine.....2-40
Precautions When You Replace Parts and Failures.... 3-418
Precautions When You Stand Up from Operator's Seat..... 2-21
Precautions When You Tow Machine.....3-547
Precautions When You Transport Machine.....3-526
Precautions When You Travel.....2-34
Precautions When You Travel on Slopes.....2-35
Precautions When You Use "Swing to Angle".....3-397
Precautions When You Use 2D Boundary Control..... 3-372
Precautions When You Use Attachments and Options Safely.....6-2
Precautions When You Use KomVision.....3-345
Precautions When You Use Lightweight Towing Hole.. 3-548
Precautions When You Use Object Avoidance...3-352
Precautions When You Use Semi-Auto Mode.... 3-416
Precautions When You Work on Machine.....2-47
Precautions When You Work on Slope.....3-280
Precautions When You Work Under Machine or Work Equipment.....2-50
Preheating Icon.....3-43
Preparations for Safe Operation..... 2-16
Prepare for Long-Term Storage..... 3-544
Prepare Shape Adjustment.....3-307
Prepare to Move Machine.....3-255
Prepare to Move Machine When You Use Track Control.....3-262
Procedure for Aftertreatment Devices Regeneration Disable Setting.....3-179
Procedure for Controller 2: Not Connected.....3-523
Procedure for Manual Stationary Regeneration..3-176
Procedure for Payload Meter Function Error..... 3-522
Procedure for Vehicle: System Error.....3-523
Procedure to Adjust Left Front Mirror (A).....3-223
Procedure to Adjust Machine Right Side Mirror (C)..... 3-227
Procedure to Adjust Regular Position of Machine Left Front Mirror (A)..... 3-224
Procedure to Adjust Regular Position of Machine Right Front Mirror (B).....3-226
Procedure to Adjust Regular Position of Machine Right Side Mirror (C).....3-228
Procedure to Adjust Right Front Mirror (B)..... 3-225
Procedure to Cancel Aftertreatment Device Regeneration Disable.....3-181
Procedure to Connect Jumper Cables.....3-553
Procedure to Disconnect Jumper Cables..... 3-553
Procedure to Lock Cap with Lock..... 3-292
Procedure to Lock Cover with Lock..... 3-293
Procedure to Lock DEF Tank Filler Port Cover...3-296
Procedure to Lock Engine Hood.....3-295
Procedure to Open Cap with Lock.....3-292
Procedure to Open Cover with Lock.....3-292
Procedure to Open DEF Tank Filler Port Cover..3-295
Procedure to Open Engine Hood.....3-294
Procedures If Fire Occurs.....2-18
Procedures to Load Machine.....3-529
Procedures to Unload Machine.....3-536
Procedures When Battery is Discharged.....3-549
Procedures When Machine Runs out of Fuel..... 3-546
Prohibited Operations.....2-37,3-274
Prohibited Operations When You Use "Swing to Angle".....3-396
Prohibited Operations When You Use 2D Boundary Control..... 3-371
Prohibited Operations When You Use Semi-Auto Mode.....3-415
Prohibition of Dig Operation on Hard Rocky Ground... 3-276
Prohibition of Digging Operation at an Angle When Teeth Do Not Engage..... 3-276
Prohibition of High-Speed Travel Operations on Rough Ground..... 3-278
Prohibition of Lifting Operation.....3-277
Prohibition of Long-Time Travel.....3-278
Prohibition of Operations at Stroke End of Hydraulic Cylinder.....3-274
Prohibition of Operations by Machine Drop Force..... 3-276
Prohibition of Operations by Travel Force.....3-274
Prohibition of Operations When Machine is Not in Stable Condition..... 3-277
Prohibition of Operations Which You Use Bucket as Lever.....3-275
Prohibition of Operations with Bucket Dropping Force 3-275
Prohibition of Sudden Operation of Travel Lever or Travel Pedal.....3-278

Prohibition of Swing or Travel When Rocks and Soils are on Top of Track Assembly..... 3-277
Protection Against Objects Which Fall, Fly, or Intrude. 2-22

Q

Quick Coupler Attachment.....2-24
Quick Coupler Caution Lamp.....3-29
Quick Coupler Equipment Name..... 6-5
Quick Coupler Indicator..... 3-40
Quick Coupler Setting.....6-6

R

Radar System Caution Lamp.....3-33
Radiator Coolant Level Caution Lamp.....3-27
Read Fuel Consumption Record.....3-54
Recommended Applications..... 3-283
Recommended Attachment Operations.....6-49
Recommended Brands and Qualities Other Than Komatsu Genuine Oils.....7-11
Recommended Fuel, Coolant, and Lubricant..... 7-6
Remote Courtesy Lights Function.....3-368
Remote Courtesy Lights Setting..... 3-67
Replace Bucket Teeth (Horizontal Pin Type)..... 4-36
Replace Bucket Teeth (Vertical Pin Type).....4-33
Replace Expansion Tank Cap.....4-95
Report Immediately If a Problem is Found.....2-17
Response Adjustment.....3-72
Rollover Avoidance.....3-46
Room Lamp Remote Switch..... 3-134
Room Lamp Switch.....3-138

S

"Swing to Angle" for Travel..... 3-399
Safety Information.....1-8
Safety Labels..... 2-2
SCR Information..... 3-88
Seat Belt Indicator.....3-36
Seat Belt Reminder.....3-36
Seat Belt Reminder Revolving Lamp.....3-37
Secure Machine with Tie-down Point.....3-533
Secure Machine Without Tie-down Point.....3-534
See Operation Record of Payload Meter Work...3-507
See Operation Records..... 3-53
Select Attachment.....6-41
Select Material..... 3-450
Select Suitable Place for Inspection and Maintenance 2-44
Select Transportation Method.....3-526
Select Truck and Start Measurement..... 3-438,3-448
Selection Guide for Vertical or Horizontal Pin Type Tooth.....6-46
Selector Valve.....6-19
Self-Sharpening Tooth (Horizontal Pin Type, Vertical Pin Type).....6-46
Semi-Auto Mode..... 3-413
Semi-Auto Mode Settings..... 3-419
Service Meter.....3-115
Service Meter Location..... 1-12
Set Attachment Locking Sensor.....6-7
Set Operator ID Holding Time.....3-110
Set Payload Loading Completion Ratio.... 3-491,3-496
Set Target Fuel Consumption Value on ECO Gauge... 3-56
Set Target Payload Weight..... 3-490,3-494
Setting of Average Fuel Consumption Display..... 3-55
Shape Adjustment of Breaker (Side Mount Type)..... 3-315
Shape Adjustment of Breaker (Top Mount Type) 3-316
Shape Adjustment of Compactor.....3-319
Shape Adjustment of Lateral Grapple.....3-320
Shape Adjustment of Ripper.....3-323
Shape Adjustment of Slope Bucket..... 3-310
Shape Adjustment of Standard Bucket and Others..... 3-308
Shape Adjustment of Tilt Bucket.....3-313
Shape Adjustment of Trapezoidal Bucket..... 3-311
Shape Adjustment of Twin Header..... 3-318
Shape Adjustment of Vertical Grapple.....3-322
Shape Setting of Quick Coupler.....6-8
Shovel Work.....3-283
Single Camera Image..... 3-347
Situations Where Object Avoidance May Not Sense Target Correctly..... 3-353
Situations Where the Machine May Become Unstable Because of Sudden Stop.....3-358
Situations Where You May Be Unable to Evacuate Machine Because of Machine Stop Control.3-359
Situations Where You May Need to Turn Off Machine Stop Control of Object Avoidance.....3-360
Specifications.....5-2,6-40
Specifications: PC220LC-12.....5-2
Specifications: PC220LCI-12.....5-4
Speed Adjustment.....3-71
Standard Torque..... 4-15
Start Engine..... 2-30
Start Engine with Jumper Cables..... 2-32,3-552
Starting Switch.....3-130
Steer Machine.....3-259
Steer Machine When You Use Track Control..... 3-265
Stop Engine Before You Inspect or Do Maintenance... 2-45
Stop Valve.....6-18
Store DEF..... 4-13
Stow Antenna.....3-344
Sunlight Sensor.....3-331
Supervisor Setting.....3-110
Supply Fire Extinguisher and First Aid Kit.....2-17
Swing Lock Indicator.....3-38
Swing Lock Switch.....3-136
Swing Parking Brake Cancel Switch.....3-139
Swing to Angle.....3-394
Switch..... 3-129
Switch Display/Non-Display of Eco Guidance..... 3-56

Switch of Work Equipment Control Lever..... 3-137
System Boot-Up Error.....3-12
System Caution Lamp.....3-23
System Operating Lamp..... 3-171

T

Target Design Surface..... 3-407
Target Surface Tolerance.....3-410
Targets of Object Avoidance.....3-352
Temperature Control Display..... 3-327
Temporary Control Cancel Switch.....3-137
Time Setting.....3-100
Time Setting of ICT Monitor (Payload Application)..... 3-504
To Pick Up a New Bucket or Attachment..... 6-11
To Release a Bucket or Attachment.....6-10
Tool Box..... 3-168
Touchpoint.....3-408
Towing and being Towed.....2-42
Track Control.....3-261
Track Control Enabled Indicator.....3-39
Track Shoes Selection..... 6-43
Transportation.....3-526
Travel Heading Indicator.....3-44
Travel Lever..... 3-146
Travel Speed Icon.....3-42
Troubles and Procedures.....3-546
Troubles and Procedures on Chassis.....3-556
Troubles and Procedures on Electrical System.. 3-554
Troubles and Procedures on Engine Related Parts..... 3-557
Truck Information..... 3-475
Turbo Protect Function.....3-236
Turn Battery Disconnect Switch to OFF Position.. 2-51
Two Workers are Required for the Maintenance When the Engine is in Operation..... 2-46

U

Unauthorized Modification..... 2-23
Understand the Machine.....2-16
Unit Selection.....3-103
Unit Setting of ICT Monitor (Payload Application)..... 3-501
Use Each Function.....3-348
Use Handrails and Steps When You Get on or Off Machine..... 2-20
Use Proper Tools..... 2-50
Use Warning Tags.....2-30
User Menu..... 3-51
User Menu Contents.....3-52
User Menu List.....3-51

V

Vent Setting Display.....3-328
Vertical Pin Type Tooth..... 6-46
Video Quality Adjustment.....3-97
Visibility from Operator Seat..... 1-9
Volume Control..... 3-340

W

Walk-Around Check.....3-201
Warning Display.....3-17
Wash Washable Floor.....4-42
Water Separator Caution Lamp..... 3-28
Wear Well-Fitting Clothes and Protective Equipment.. 2-16
When Object Avoidance Has Failure.....3-352
When Operator Identification or Operator ID Authentication Setting is OFF..... 3-15
When Required.....4-20
When There is Possibility That Machine Becomes Unstable Because of Sudden Stop..... 3-372,3-397,3-416
When There is Possibility That You Cannot Evacuate Machine Because of Machine Stop Control..... 3-373,3-398,3-417
When You Add New Operator ID..... 3-105
When You Change Contents of Operator ID.....3-107
When You Clear All Payload History.....3-469
When You Clear All Registered Payload Record..... 3-461,3-469
When You Clear Payload History by 1 Truck or by 1 Material (Bulk).....3-473
When You Clear Payload History by 1 Truck or by 1 Material (Individual)..... 3-471
When You Clear Payload Record During Loading..... 3-459,3-466
When You Clear Payload Record of Last 1 Bucket..... 3-459,3-466
When You Clear Payload Record of Last 1 Truck..... 3-460,3-467
When You Delete Contents of Operator ID.....3-108
When You Delete Payload History of a Single Truck... 3-461
When You Delete Payload History of All Trucks. 3-464
When You Delete Registered Material Information..... 3-487
When You Delete Registered Truck Information. 3-480
When You Display or Edit Truck Information on ICT Monitor.....3-477
When You Display or Edit Truck Information on Machine Monitor..... 3-475
When You Register New Material Information.... 3-483
When You Register New Truck..... 3-477
When You Replace Extension Arm..... 3-68
When You See or Edit Registered Material Information..... 3-485
When You See or Edit Registered Truck Information... 3-475,3-478
When You Use Blocks.....4-45
When You Use Payload Meter Function on ICT Monitor.....3-444

When You Use Payload Meter Function on Machine Monitor.....3-435
Window Washer Switch..... 3-131
Wiper Switch.....3-132
Work Equipment Control Lever.....3-146
Work Precautions.....6-17
Work Screen When Attachment is Not Engaged.. 6-14
Working Mode at Startup Setting..... 3-70
Working Mode Icon..... 3-42

Y

Your Machine Serial Numbers and Distributor..... 1-12

PC220LC-12, PC220LCI-12 HYDRAULIC EXCAVATOR (Basic Operation)

Form No. TEN01214-06

©2026 Komatsu Ltd.
All Rights Reserved
Printed in Japan 2026-03